Oct. 16, 1951 K. M. JESSE 2,571,888

DISPOSABLE BABY BIB

Filed April 21, 1949

Fig. 1

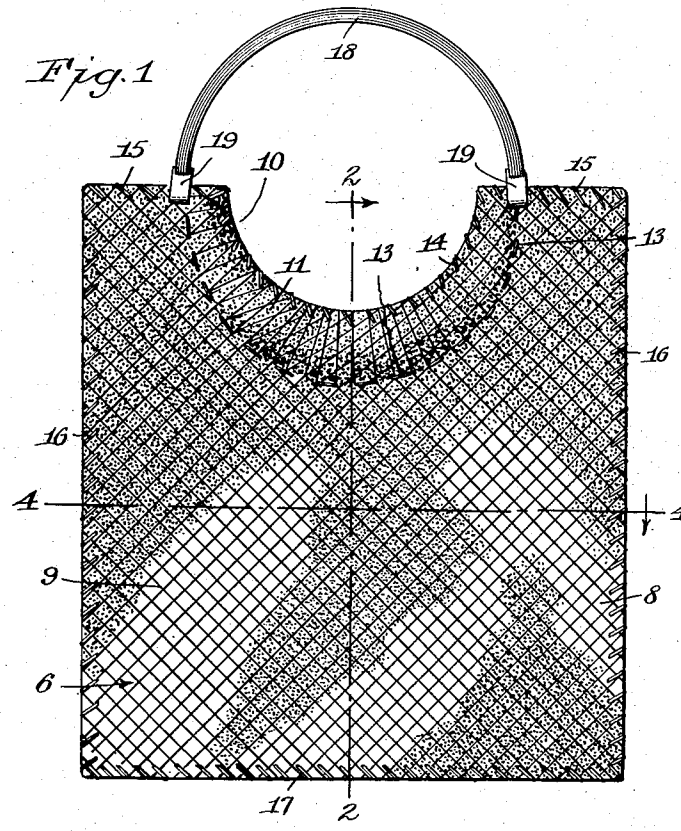

Fig. 2

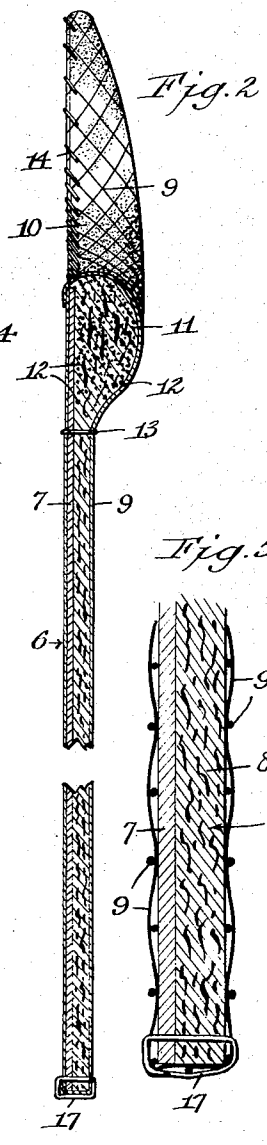

Fig. 3

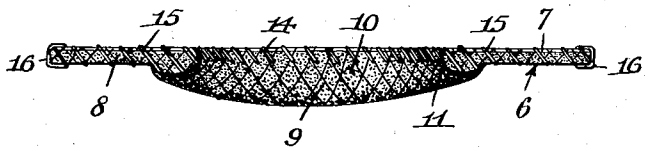

Fig. 4

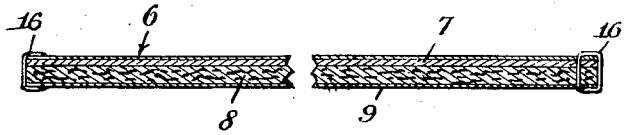

Fig. 5

Klaus M. Jesse, Inventor

By Emil Neubert

Attorney.

Patented Oct. 16, 1951 2,571,888

UNITED STATES PATENT OFFICE

2,571,888

DISPOSABLE BABY BIB

Klaus M. Jesse, Wichita, Kans.

Application April 21, 1949, Serial No. 88,762

5 Claims. (Cl. 2—49)

1

My invention relates to a disposable baby bib, and it has for one of its objects to provide a sanitary, convenient, and inexpensive bib capable of quickly absorbing moisture so as to eliminate the constant wet and uncomfortable condition usually encountered around the neck and chest of an infant, caused, when using a launderable bib, by drooling or during the feeding of the infant and thus tending to result in skin irritations and colds.

Another object of this invention is to provide a bib of this kind which can be purchased in quantities and at a price enabling the bib to be disposed of after two or more feedings without intention of further use, and thus avoid disagreeable odors and development of germs commonly attendant when storing launderable bibs for later washing.

A further object is to provide a bib of the kind mentioned which will absorb a greater quantity of moisture instantly and thus will exteriorly remain comparatively clean during a number of feedings, due to the fact that any moisture or liquids reaching the same will pass through large meshes of a hold-down or restraining medium serving to maintain a thin absorbent cellulose facing layer in flat condition, similar to the action of a hair-net applied to one's hair, and being absorbed without building up the drippings or moistened substances on the exterior of the so practically fully exposed absorbent layer.

A further object of my invention is to provide a bib of this kind built up of a protective layer or backing of absorbent material covered by a somewhat thicker layer of cotton-batting or other absorbent cellulose material retained in flattened condition against the absorbent protective layer or backing by comparatively widely spaced-apart threads so as to substantially expose the entire superficial area of the absorbent cellulose material, with the view of having the latter absorb the moisture or drippings escaping from the mouth of the infant using the bib to the extent that any moisture reaching the under protective layer of absorbent material will be insufficient in quantity to saturate said under layer, thus keeping the clothes and chest of the baby or infant dry at all times.

A further and very important feature of this invention is to provide a fluffy padded or protuberant neck-band for the bib in which and preferably over which an antiseptic soothing or healing baby-powder is distributed for the dual purpose of eliminating disagreeable odors and protecting the infant's neck and chest against irritation and chafing.

2

A bib of this kind is of decided advantage at all times, and particularly while traveling, since even if the bib is used during the feedings of a single day, the moisture or drippings accumulated would, because of the almost complete exposure of the absorbent cellulose outer layer, prevent the formation of bacteria and by reason of the use of the antiseptic baby-powder distributed throughout the fluffy neck-band which is integral with the absorbent cellulose outer layer, would avoid disagreeable odors; and since the bibs are inexpensive they could, without hardship or extravagance, be disposed of at the end of each feeding.

With the above objects and advantages in view and others to appear hereinafter, my invention consists in the novel features of construction of the bib and arrangement, disposition and assembly of parts or portions thereof to be hereinafter described and more particularly pointed out in the subjoined claims.

In the drawings:

Fig. 1 is a front elevation of a bib constructed in accordance with my invention.

Fig. 2 is an enlarged broken longitudinal section taken on line 2—2, Fig. 1.

Fig. 3 is a top edge view of the bib, the attaching strap by means of which the bib is held in place being omitted.

Fig. 4 is an enlarged broken horizontal section taken on line 4—4, Fig. 1.

Fig. 5 is an enlarged vertical section taken through the lower portion of a bib, the thickness of certain parts being exaggerated to more particularly illustrate the construction and relationship of parts constituting the bib.

The bib comprises a body portion 6 cut to the outline desired and comprising a plurality of layers of material one overlying another so as to form a laminated structure.

The body portion comprises an absorbent sheet of paper 7 which may be cut to any outline which the bib is to have and in front of the absorbent sheet of paper 7 and covering all portions thereof is a layer 8 of soft absorbent cellulose material, cotton batting being an exemplar of such material. This material is very soft, fluffy and highly absorbent and is cut to the outline of the absorbent sheet of paper 7 which serves as a backing for the absorbent cellulose material and is sufficiently stiff to keep the bib in flat condition. The two layers 7 and 8 have applied to their exterior surfaces a wide mesh gauze 9, the threads of which lie in contact with the rear surface of the absorbent backing sheet 7, as it may be termed, and in contact with the outer surface of

the layer of absorbent cellulose material 8 so that practically the entire outer surfaces of both the layers 7 and 8 are exposed and the crossed threads of the wide mesh gauze 9 serve as restraining mediums to maintain the cellulose layer 8 evenly spread over the backing layer and thus provide a unitary laminated structure in which the threads of the gauze material at the front and rear of the bib assure practically full exposure of the outer surfaces of both said layers, the wide mesh restraining material serving only in the manner of a hair-net in keeping the soft, fluffy absorbent cellulose material in the form of a thin flat layer without the possibility of fibers or strands thereof extending outwardly therefrom.

It is to be noted that I provide a semi-circular neck-notch 10 in the body portion of the bib at its upper end, midway between its longitudinal edges, and to accomplish this, notches may be formed in the layers 7 and 8 prior to placing them in overlying position or they may be cut in such material after being superimposed; and around this notched portion or neck-notch, the absorbent cellulose layer is thickened or padded, as shown at 11. This thickened or padded portion is integral with the thin flat portion of the fluffy absorbent cellulose material and forms a protuberant neck-band. The latter is preferably provided with a convexed exterior surface and it is formed of comparatively loose portions of the cellulose material throughout, in and over the entire region of which an antiseptic soothing or healing baby-powder is distributed, as indicated by the dots 12 in Fig. 2 of the drawing. Thus the natural movement of the baby's body during the act of being fed will cause the powder dispersed in and/or distributed over the protuberant neck-band to be released therefrom and find lodgment on the neck of the baby, with the result that should any moisture reach such portion of the baby's body, the moisture, joined with the healing qualities of the powder, will increase such healing qualities and prevent irritation and chafing.

Under the term "layers," the wide mesh material 9 may be considered as outer layers. However, such material is not in reality a covering material, but rather a retaining or restraining material or medium to maintain the two layers 7 and 8 in flat condition and restrain the fibers of the absorbent cellulose layer from expanding or even projecting outwardly in the manner of stray hairs projecting through a hair-net. Such fibers might become separated and adhere to the fingers of the infant and eventually be taken into the infant's mouth. These outer layers are consequently in the form of thin threads which cross each other and assure almost complete exposure of the layers 7 and 8 which may be referred to as intermediate or body layers.

Since the absorbent cellulose material 8 adjacent the neck-notch 10 is fluffed to provide a raised or protuberant region in which at least the outer or front portion is supplied with a baby powder, this raised or protuberant region is maintained by stitching along the outer curved line, as at 13, thus preventing displacement of the fluffy padded region downwardly at the bottom and laterally at the sides. The inner marginal portion of this padded neck-band, as it may be termed, is also stitched, as at 14, to maintain the padded formation at the neck-band; this sewing being accomplished by overcast stitches and this overcast stitching is continued laterally from opposite sides of the neck-notch to tie the layers of the body-portion together, as shown at 15, thence along the longitudinal edges of the body-portion, as at 16, and thence along the lower edge of the body portion, as at 17.

So stitched, the bib is comparatively flat, has a soft padded neck-band covered and/or impregnated with a baby powder and is capable of being applied to a baby with assurance of proper protection for its neck and chest and for its garment.

For the purpose of attaching the bib to the baby, I prefer to use an elastic strap 18 having spring clips 19 at opposite ends which may be clipped onto the bib at the upper end thereof and at opposite sides of the neck-notch 10. One elastic strap will, of course, be used for all bibs and when the bibs are purchased in quantities, one strap will be provided with each package of bibs so that a single strap will serve for a large number of bibs.

Having thus described my invention, what I claim is:

1. A disposable and non-launderable bib for an infant, comprising a body-portion formed along its upper edge to provide a neck-notch and having a substantially flat backing and a comparatively thin layer of soft absorbent cellulose material covering the front of said backing, both being of like outline, said cellulose material being protuberant around said neck-notch, and wide mesh gauze material covering the front and rear of said body-portion including the protuberant portion around said neck-notch, said gauze material being stitched to the marginal portions of said cellulose material, and stitching running along the outer curved line of said protuberant portion so as to maintain the form of the latter.

2. A readily disposable and non-launderable bib for an infant, comprising a body-portion cut along its upper edge to form a neck-notch, said body-portion including flattened cellulose material and a wide mesh covering and restraining sheet applied over said flattened cellulose material, said covering and restraining sheet and said flattened cellulose material being of like outline and marginally stitched together to prevent stretching of said cellulose material, the latter being loosely bunched around said neck-notch to form a neck-band protuberant with respect to the front surface of said body-portion, said protuberant neck band having an antiseptic soothing or healing baby-powder dispersed therein.

3. A readily disposable and non-launderable bib for an infant, comprising a body-portion cut along its upper edge to form a neck-notch, said body-portion including a flat sheet of backing material of sufficient stiffness to maintain the body-portion in flat condition, a thin layer of soft absorbent cellulose material facing the front of said backing material and loosely bunched in crescent shape around said neck-notch to form a neck-band protuberant with respect to the front of the remainder of said cellulose material, said protuberant neck-band being defined by stitching around the loosely bunched crescent-shaped area to prevent undue deformation under pressure by the infant's chin and having an antiseptic soothing baby-powder dispersed within the fibers thereof, and a reticular restraining medium applied over the front of said cellulose material including the protuberant neck-band to retain the latter in a protuberant padded condition and the remainder of the cellulose facing material in flat condition, said baby-powder being exudable through the meshes of said reticular restraining material under movement of the infant to whom the bib is attached during the act of feeding.

4. A disposable and non-launderable bib for an infant, comprising a body-portion cut along its upper edge to form a neck-notch and including a flat sheet of backing material of a definite outline and a comparatively thin layer of cellulose material similarly outlined facing the front of said backing material and bunched around said neck-notch to form a neck-band protuberant with respect to the remainder of the front of said cellulose material, said protuberant neck-band being loosely fluffed and having an antiseptic soothing baby-powder dispersed between the fibers thereof, and a reticular restraining medium applied to the front of said layer of cellulose material including the protuberant neck-band to retain the latter in its protuberant condition integral with the remainder of the cellulose material and the latter in flat condition, said baby-powder being dischargeable through the interstices of said restraining material under action of the infant to whom the bib is attached during the act of feeding.

5. A disposable and non-launderable bib for an infant, comprising a body-portion cut along its upper edge to form a neck-notch and composed of a flat backing sheet, a comparatively thin layer of soft cellulose material facing the front of said backing sheet and bunched around said neck-notch to form a neck-band protuberant with respect to the front of the remainder of said cellulose material, said protuberant neck-band being loosely

fluffed and having an antiseptic soothing baby-powder dispersed between the fibers thereof, and a reticular restraining medium applied to the front of said cellulose material, including the protuberant neck-band to retain the latter in its protuberant condition and the remainder of the cellulose material in flat condition, said backing sheet and layer of cellulose material being of like outline and marginally attached together to assure maintenance of both in flat condition, said baby-powder being dischargeable under action of the infant to whom the bib is attached during the act of feeding, and means applied to the upper end of said body-portion to fasten the bib to an infant.

KLAUS M. JESSE.

REFERENCES CITED

The following references are of record in the file of this patent:

UNITED STATES PATENTS

Number	Name	Date
776,041	Wysard	Nov. 29, 1904
1,551,829	Maxwell	Sept. 1, 1925
1,674,600	MacKenzie	June 19, 1928
1,729,752	Southgate	Oct. 1, 1929
1,850,033	Ritter	Mar. 15, 1932
1,963,120	Hall	June 19, 1934
2,116,685	Nicolet	May 10, 1938