March 17, 1931. H. E. HUBBARD ET AL 1,796,524

PRINTING MACHINE

Filed Feb. 6, 1928 14 Sheets-Sheet 1

Fig. 1

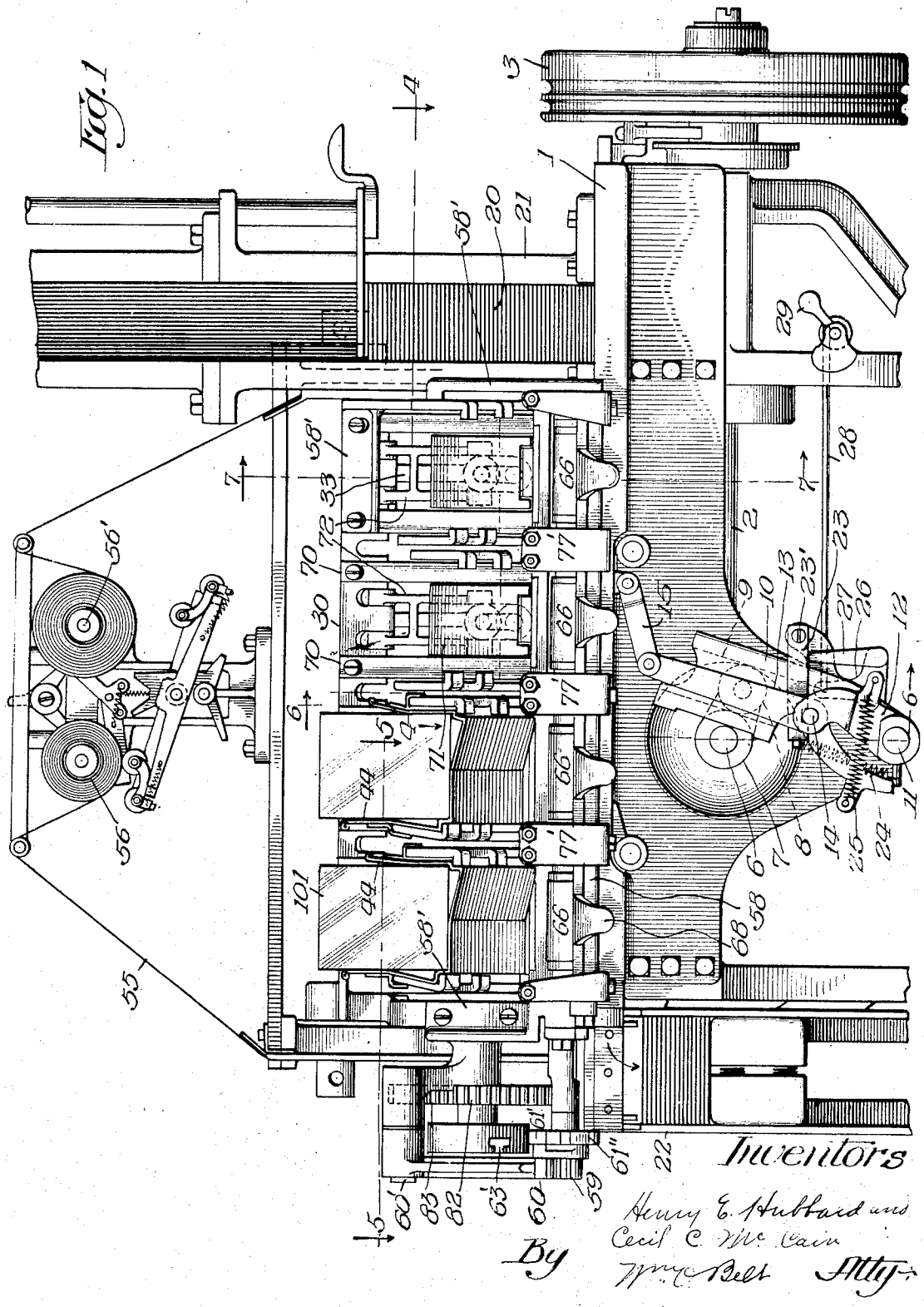

March 17, 1931. H. E. HUBBARD ET AL 1,796,524

PRINTING MACHINE

Filed Feb. 6, 1928 14 Sheets-Sheet 2

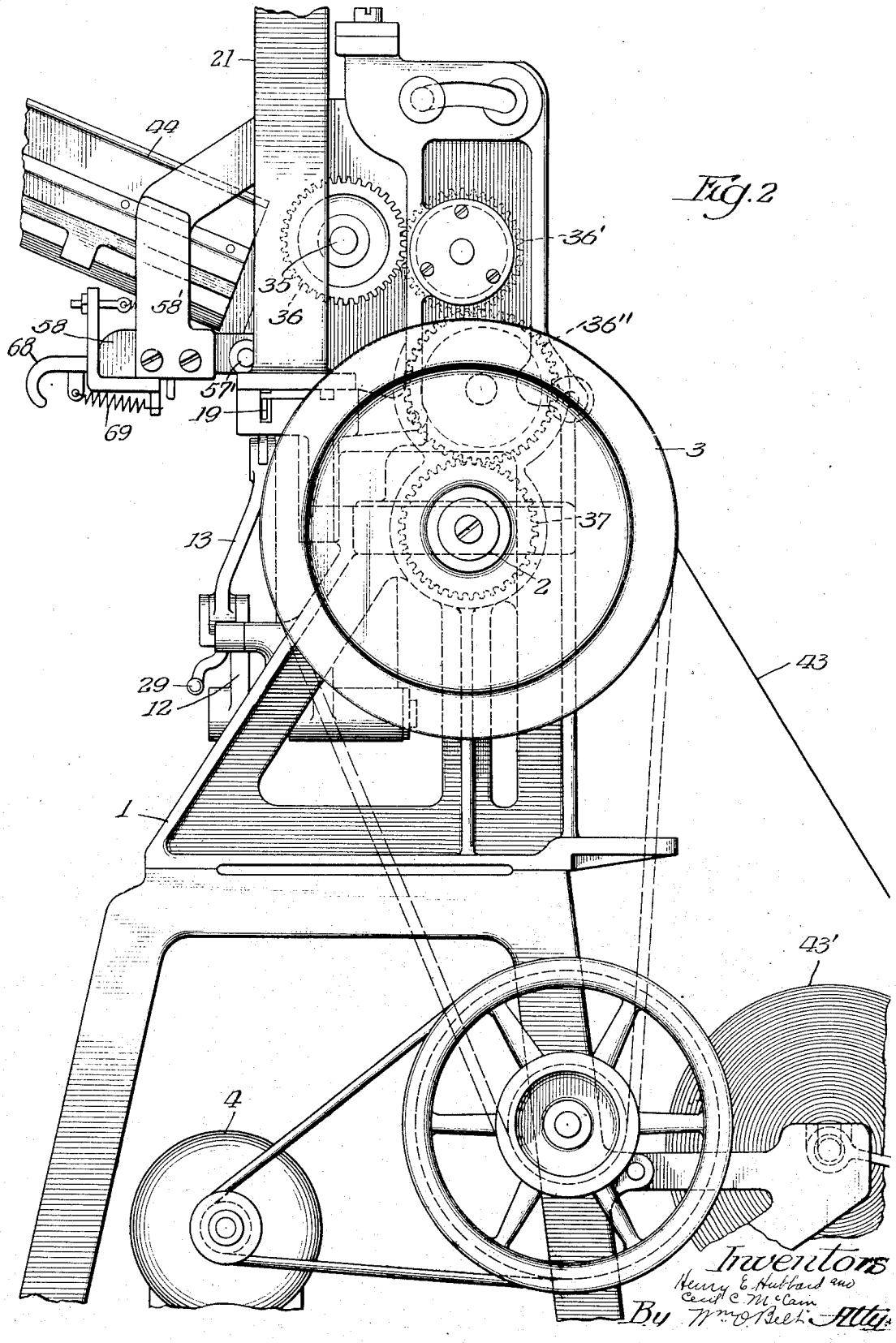

Fig. 2

Inventors
Henry E. Hubbard and
Cecil C. McCain
By Wm. O. Belt Atty.

March 17, 1931. H. E. HUBBARD ET AL 1,796,524

PRINTING MACHINE

Filed Feb. 6, 1928 14 Sheets-Sheet 3

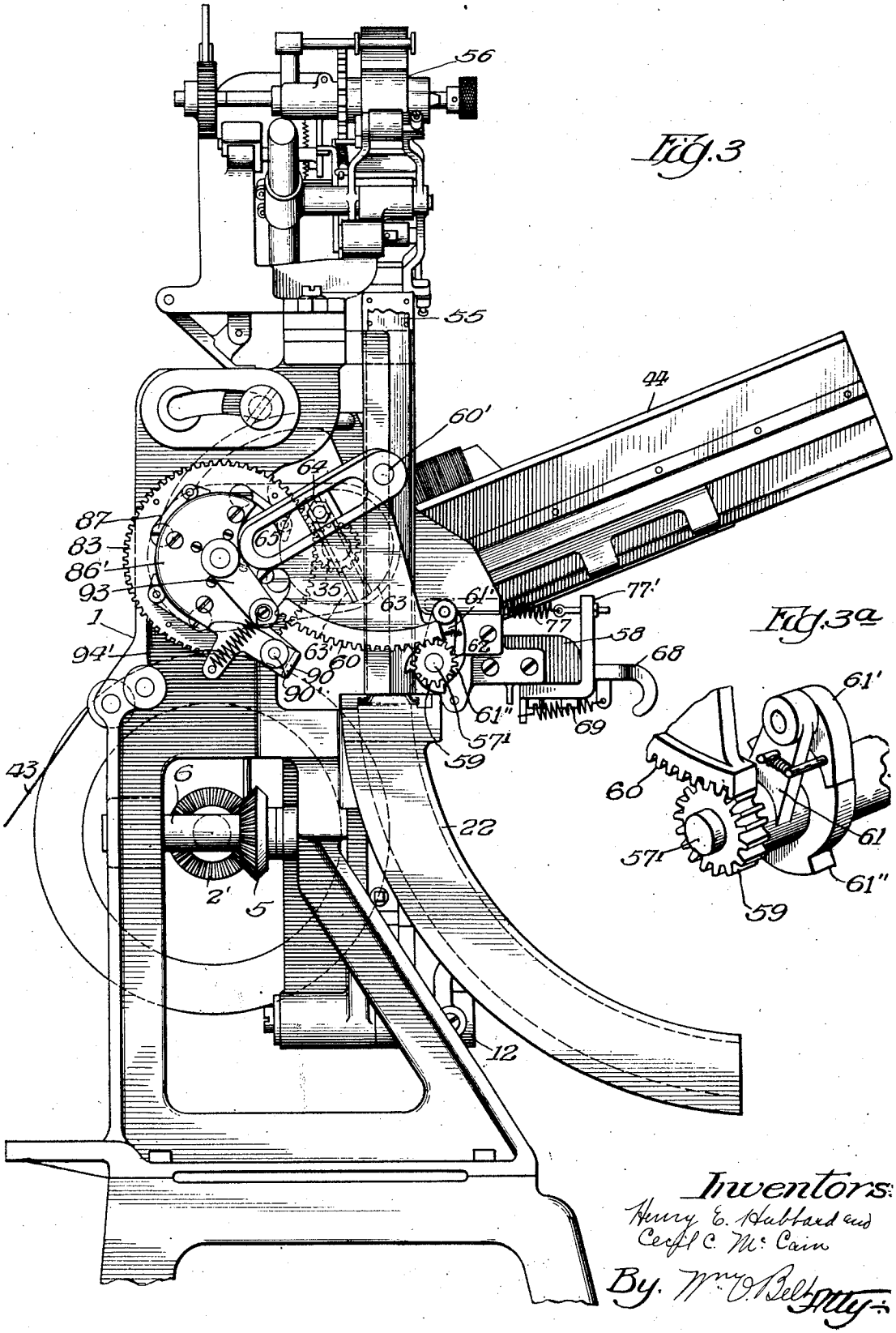

Fig. 3

Fig. 3a

Inventors:
Henry E. Hubbard and
Cecil C. McCain
By. Wm. O. Belt
Atty.

March 17, 1931. H. E. HUBBARD ET AL 1,796,524

PRINTING MACHINE

Filed Feb. 6, 1928 14 Sheets-Sheet 4

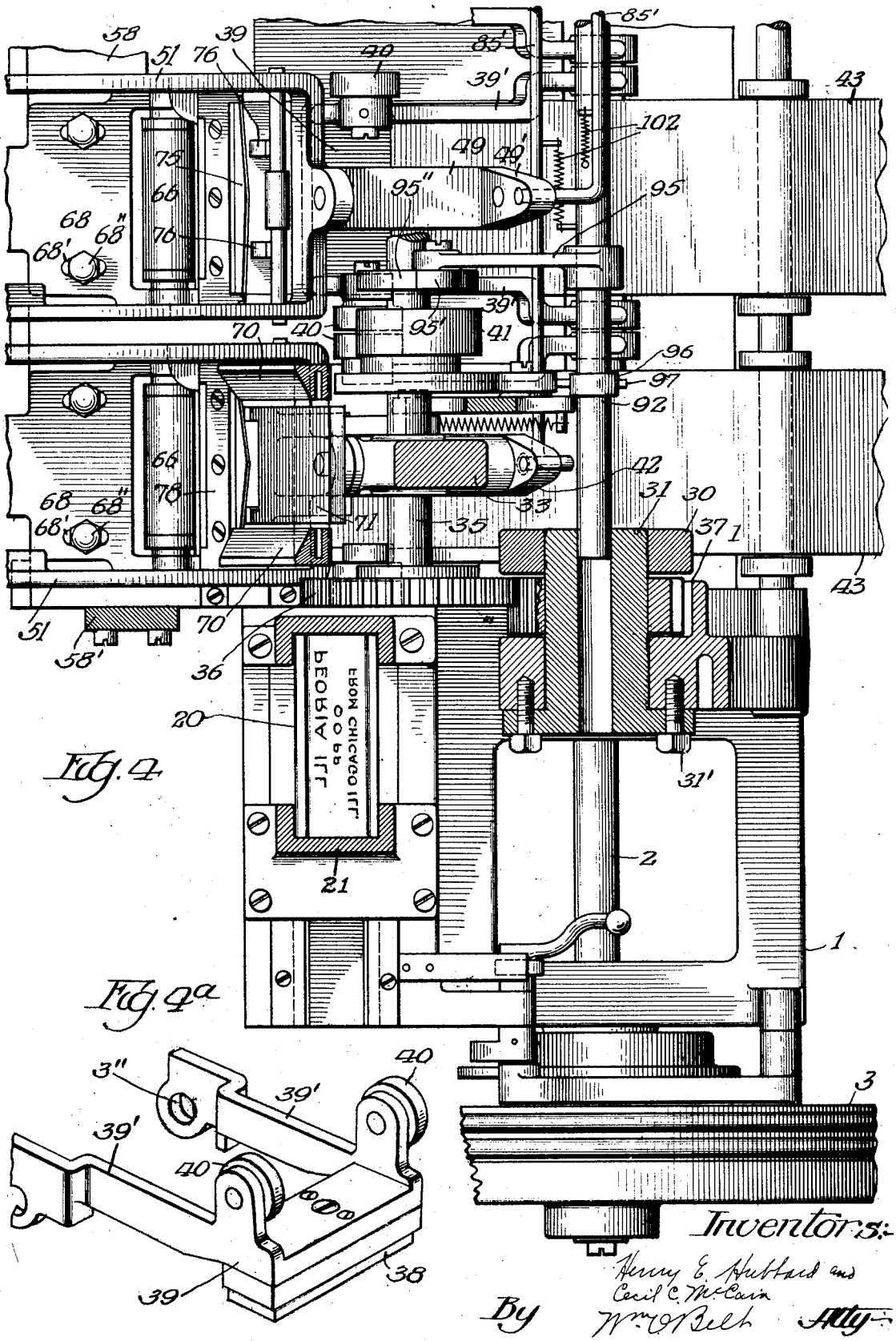

Fig. 4.

Fig. 4a

Inventors:
Henry E. Hubbard and
Cecil C. McCain
By Wm. O. Belt Atty.

March 17, 1931. H. E. HUBBARD ET AL 1,796,524

PRINTING MACHINE

Filed Feb. 6, 1928 14 Sheets-Sheet 5

Fig. 5

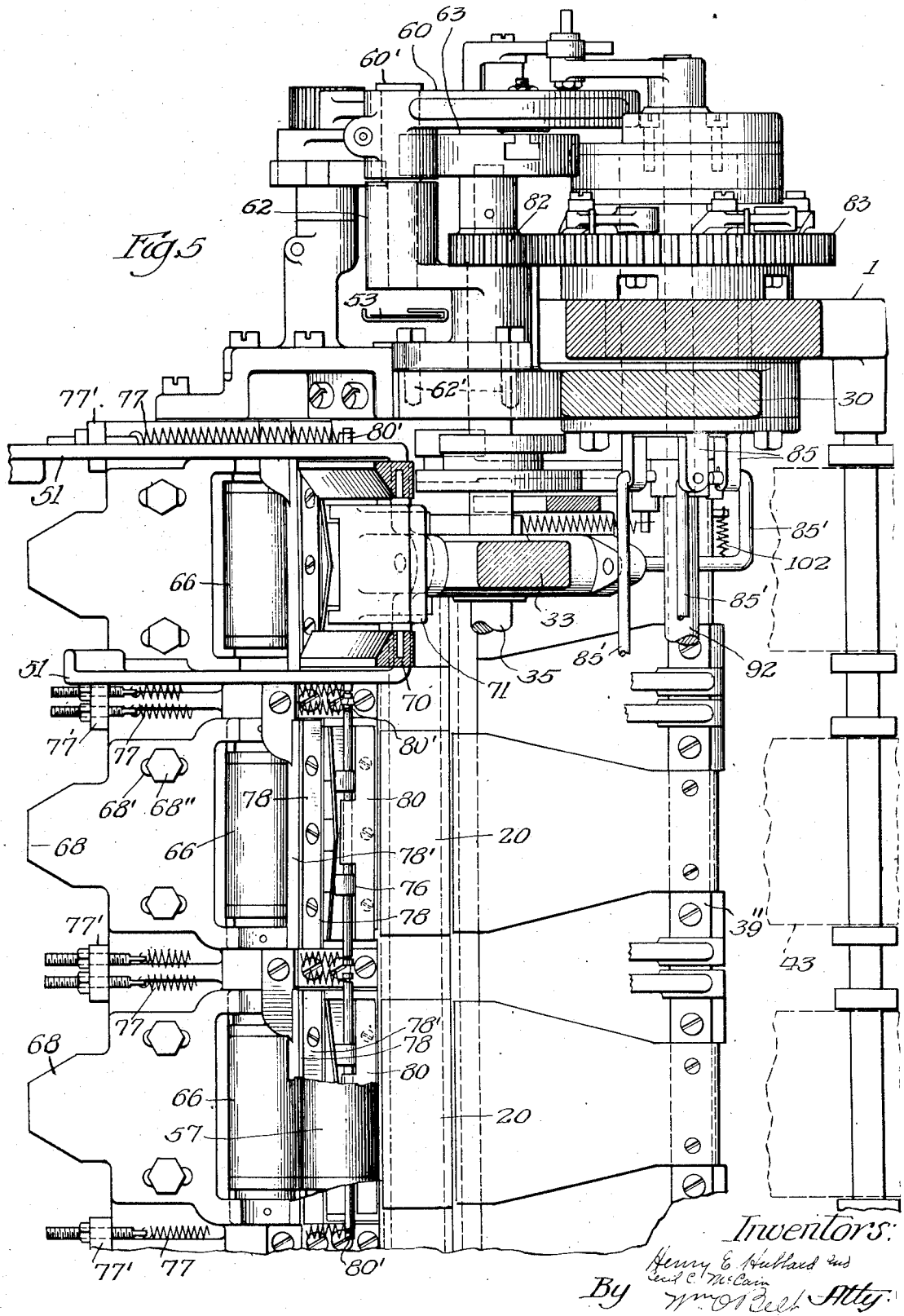

Inventors:
Henry E. Hubbard and
Earl C. McCain
By Wm. O'Neil Atty.

March 17, 1931. H. E. HUBBARD ET AL 1,796,524

PRINTING MACHINE

Filed Feb. 6, 1928 14 Sheets-Sheet 6

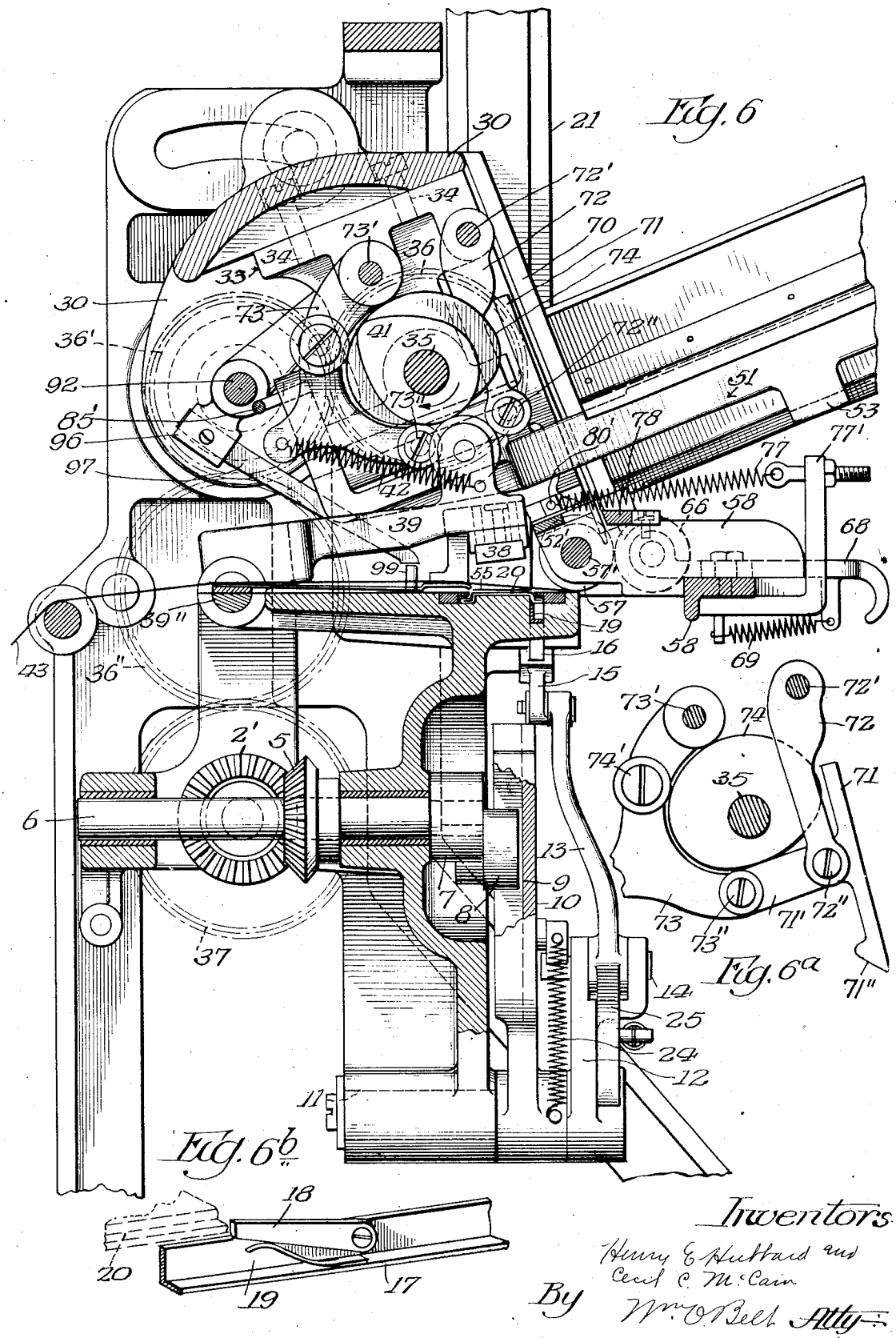

March 17, 1931. H. E. HUBBARD ET AL 1,796,524

PRINTING MACHINE

Filed Feb. 6, 1928 14 Sheets-Sheet 7

Fig. 7

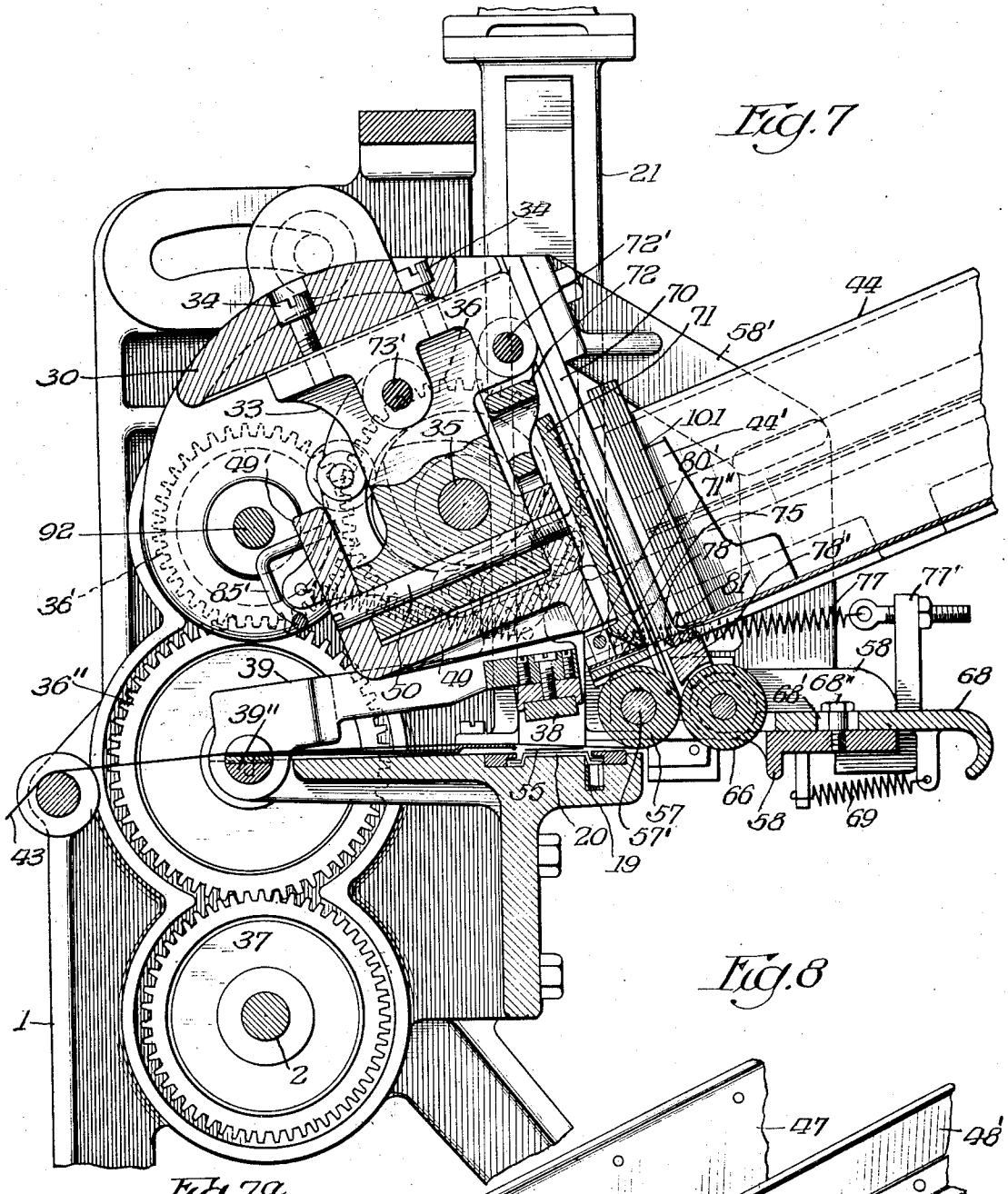

Fig. 8

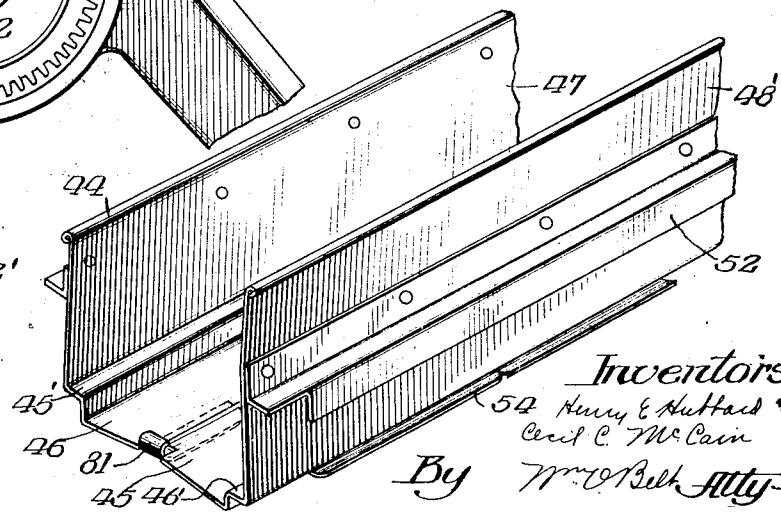

Fig. 7a

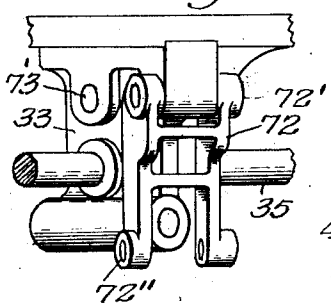

Inventors:
Henry E. Hubbard
Cecil C. McCain
By Wm. O. Belt Atty.

March 17, 1931. H. E. HUBBARD ET AL 1,796,524

PRINTING MACHINE

Filed Feb. 6, 1928 14 Sheets-Sheet 8

Fig. 9

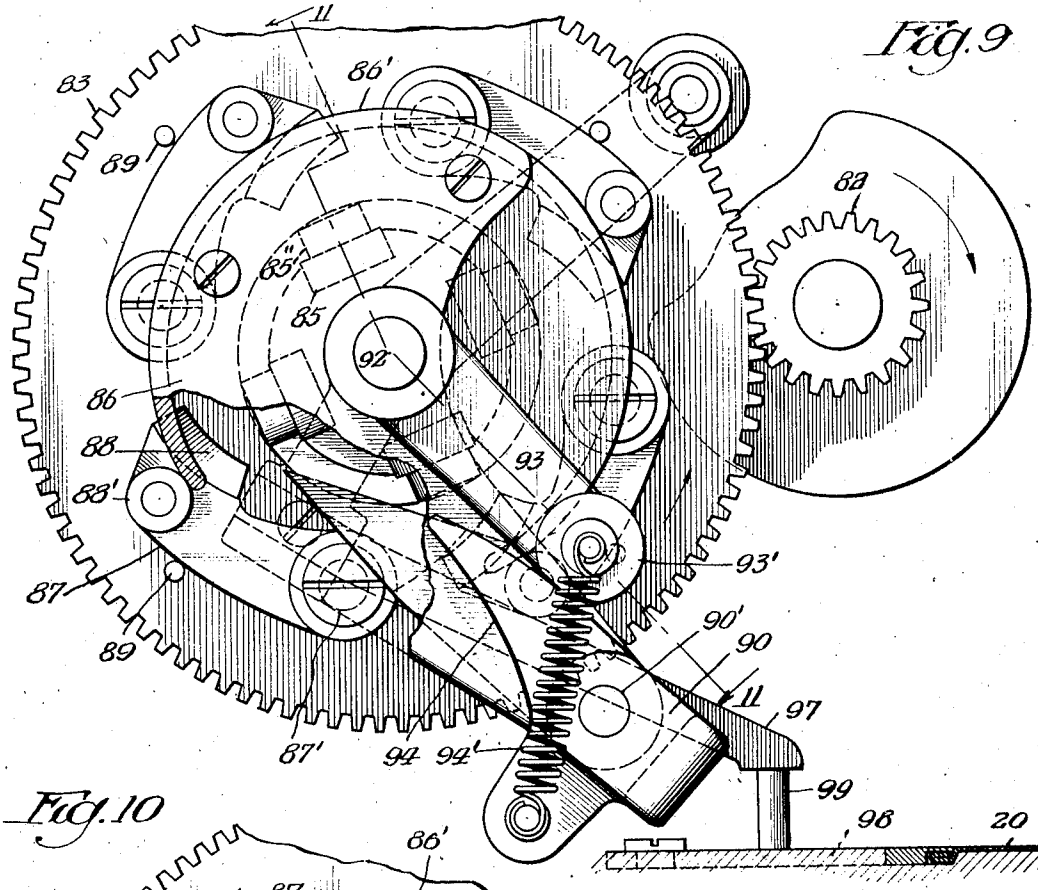

Fig. 10

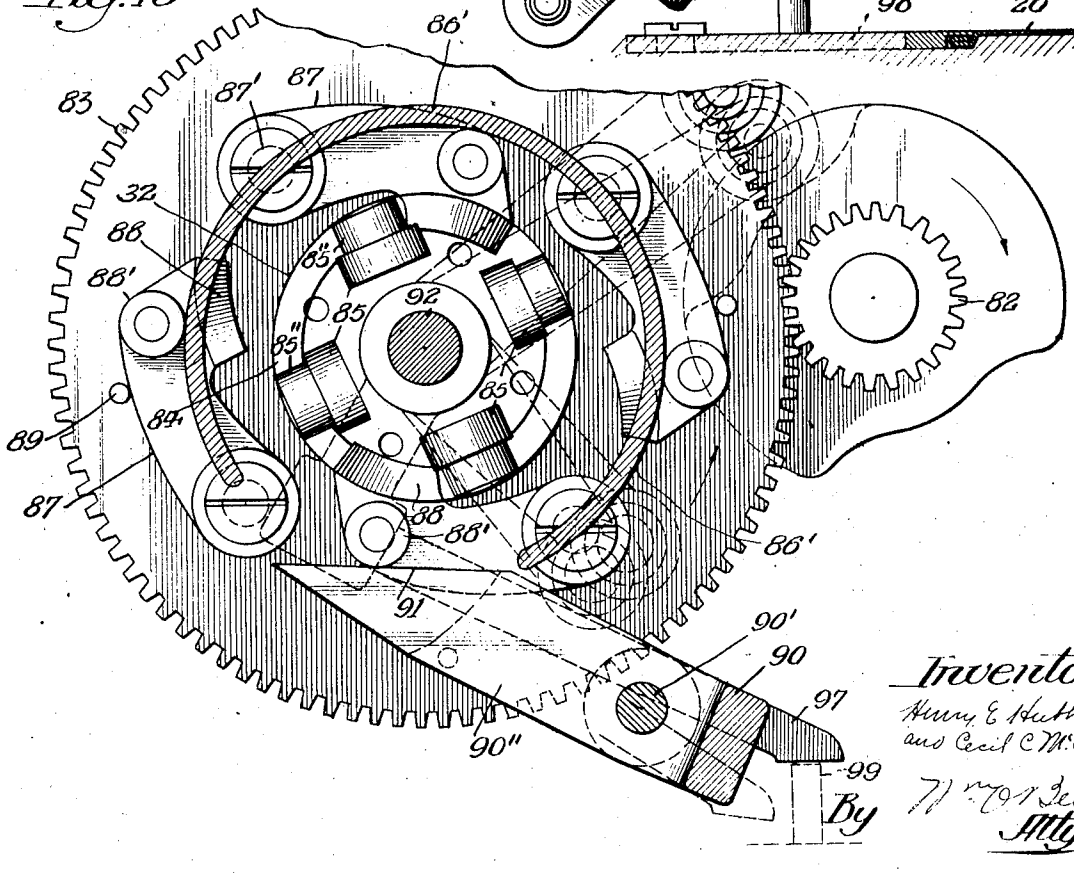

Inventors
Henry E. Hubbard
and Cecil C. McCain
By Wm. O. Belt
Atty.

March 17, 1931. H. E. HUBBARD ET AL 1,796,524

PRINTING MACHINE

Filed Feb. 6, 1928 14 Sheets-Sheet 9

Fig. 11

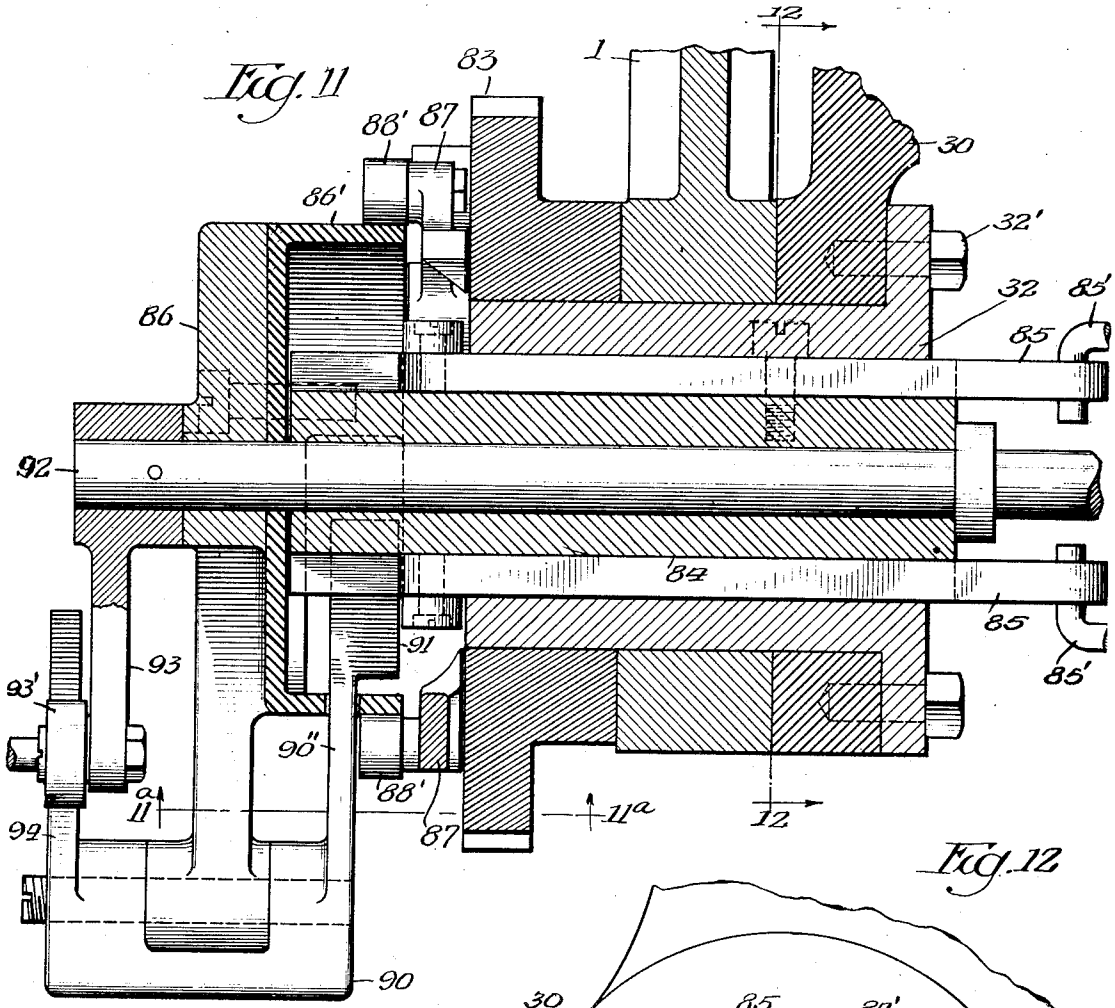

Fig. 12

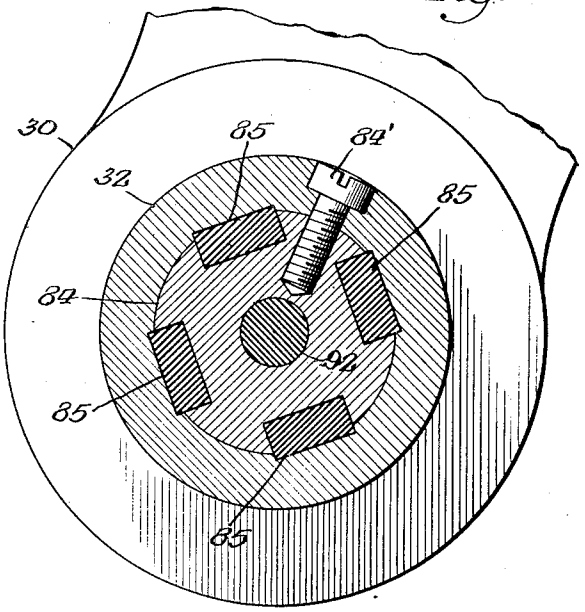

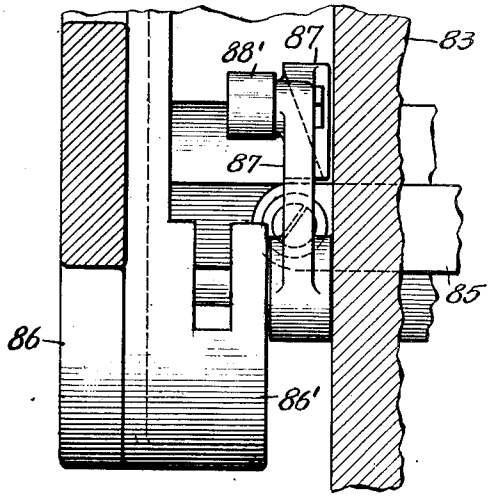

Fig. 11a

Inventors
Henry E. Hubbard and
Cecil C. McCain
By W. O. Belt Atty.

March 17, 1931. H. E. HUBBARD ET AL 1,796,524

PRINTING MACHINE

Filed Feb. 6, 1928 14 Sheets-Sheet 10

Fig. 13

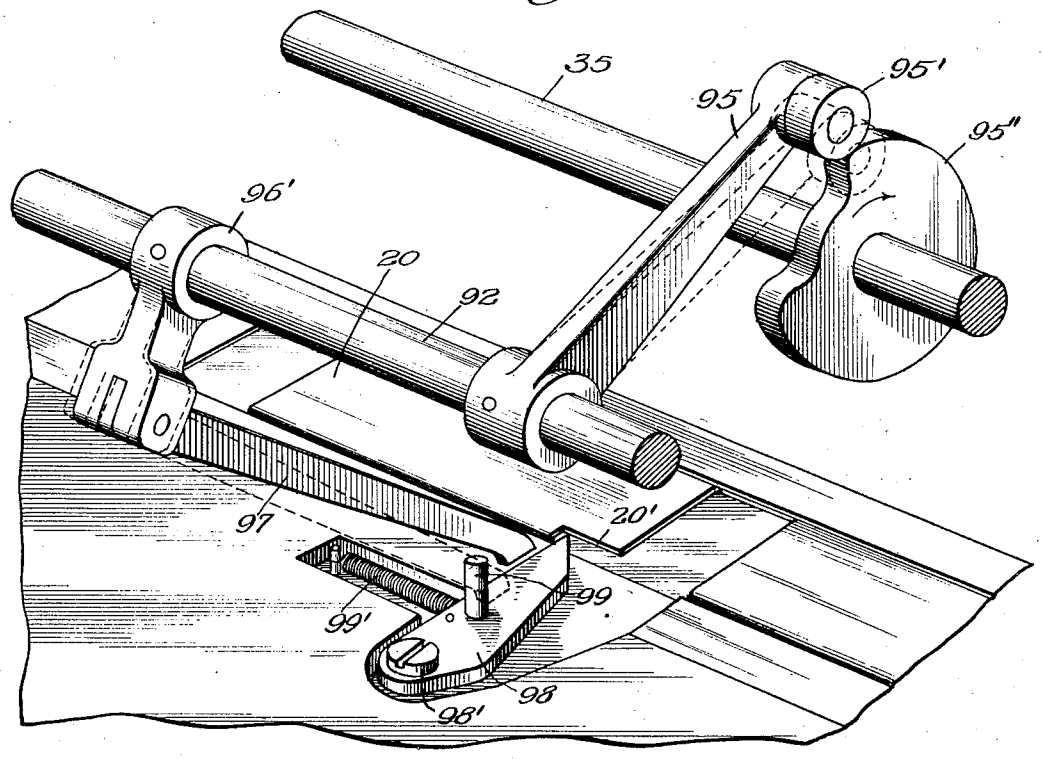

Fig. 14

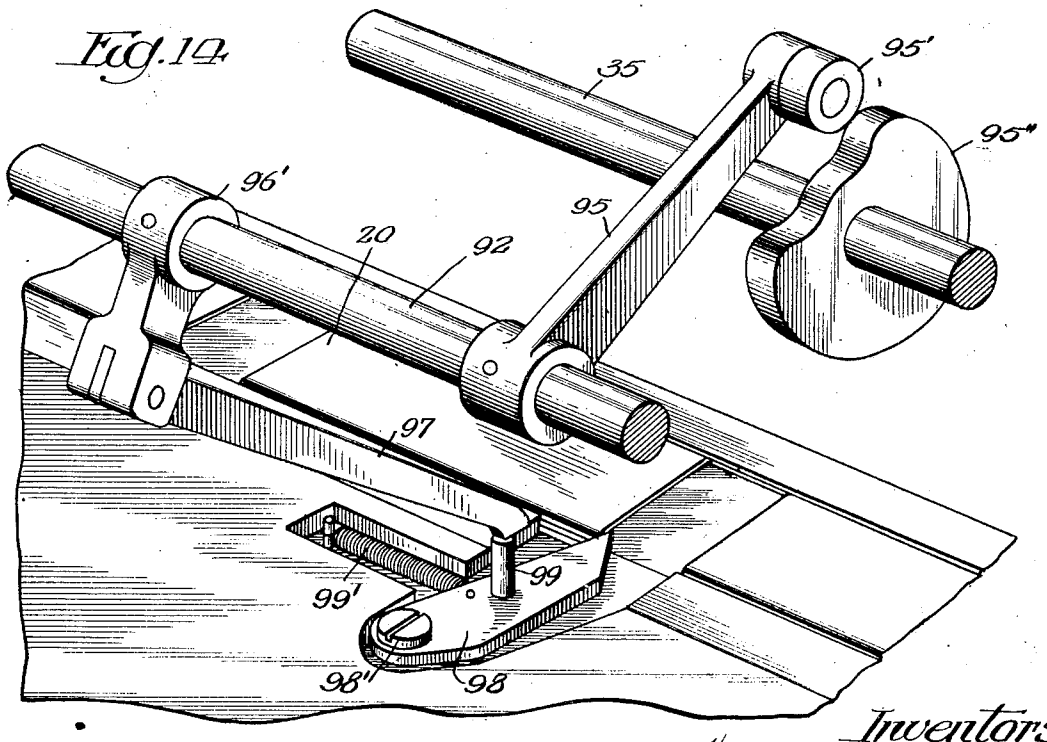

Inventors
Henry E. Hubbard and
Cecil C. McCain
By Wm. O. Belt Atty.

March 17, 1931. H. E. HUBBARD ET AL 1,796,524

PRINTING MACHINE

Filed Feb. 6, 1928 14 Sheets-Sheet 11

Fig. 15

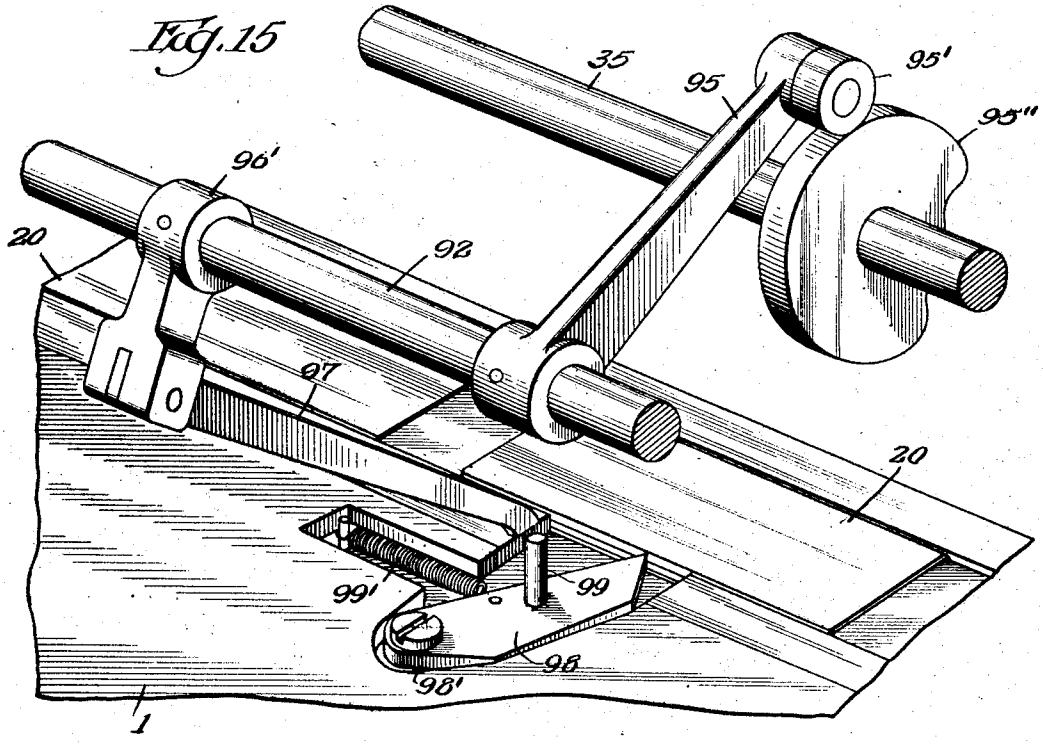

Fig. 16

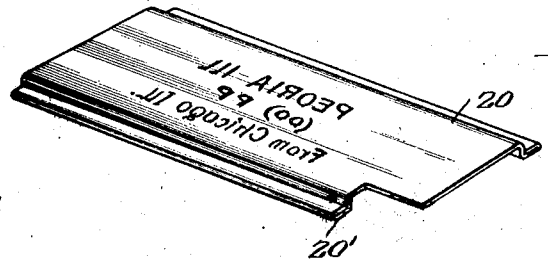

Fig. 17

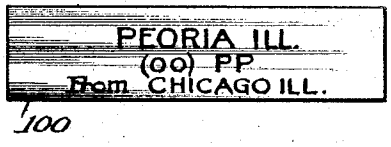

Fig. 18

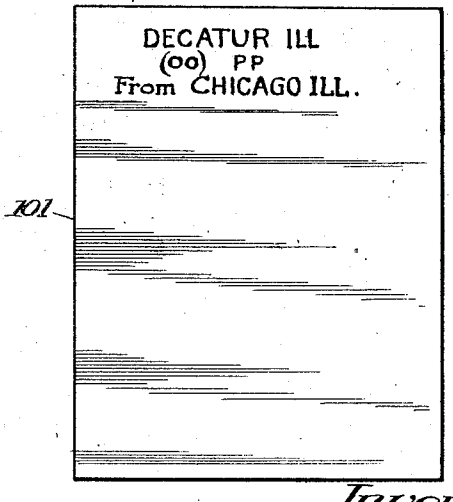

Inventors:
Henry E. Hubbard and
Carl C. McCann
By Wm. O. Belt Atty.

March 17, 1931. H. E. HUBBARD ET AL 1,796,524

PRINTING MACHINE

Filed Feb. 6, 1928 14 Sheets-Sheet 12

Fig. 19

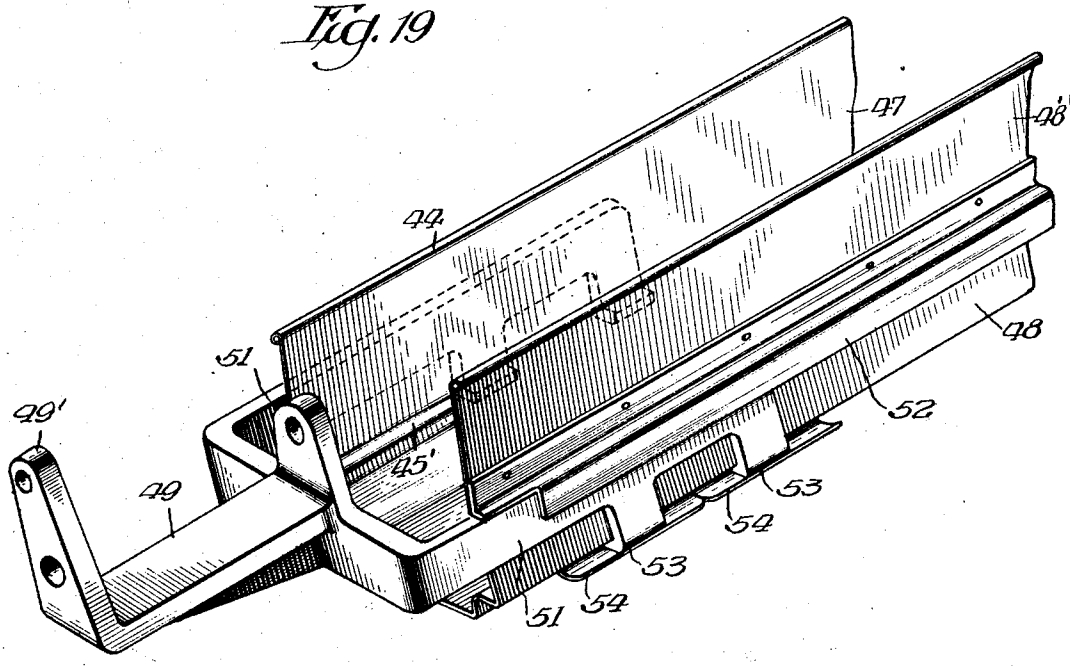

Fig. 20

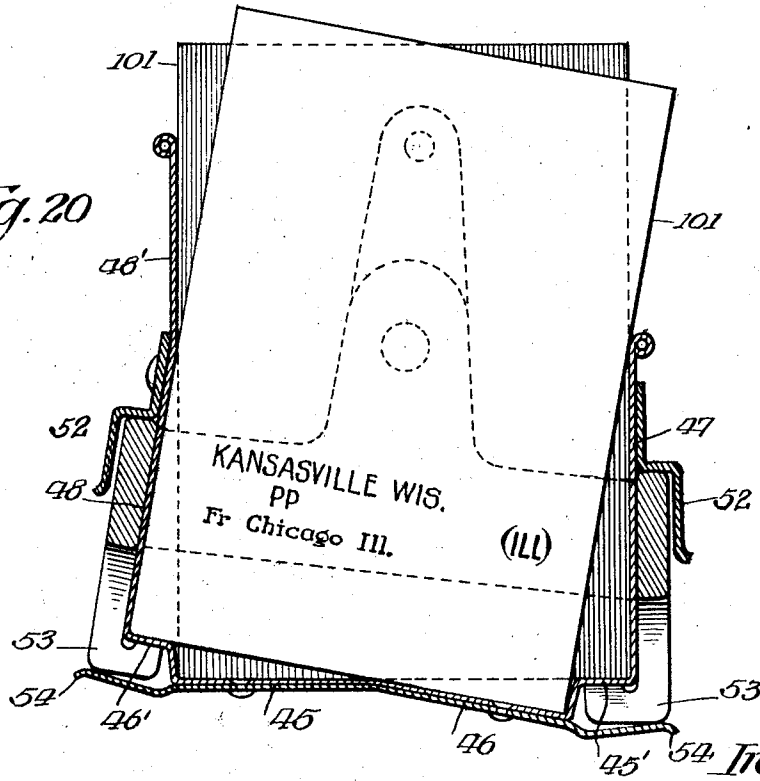

Inventors

Henry E. Hubbard and
Cecil C. McCain

By Wm. O. Belt Atty.

March 17, 1931. H. E. HUBBARD ET AL 1,796,524

PRINTING MACHINE

Filed Feb. 6, 1928 14 Sheets-Sheet 13

Fig. 21

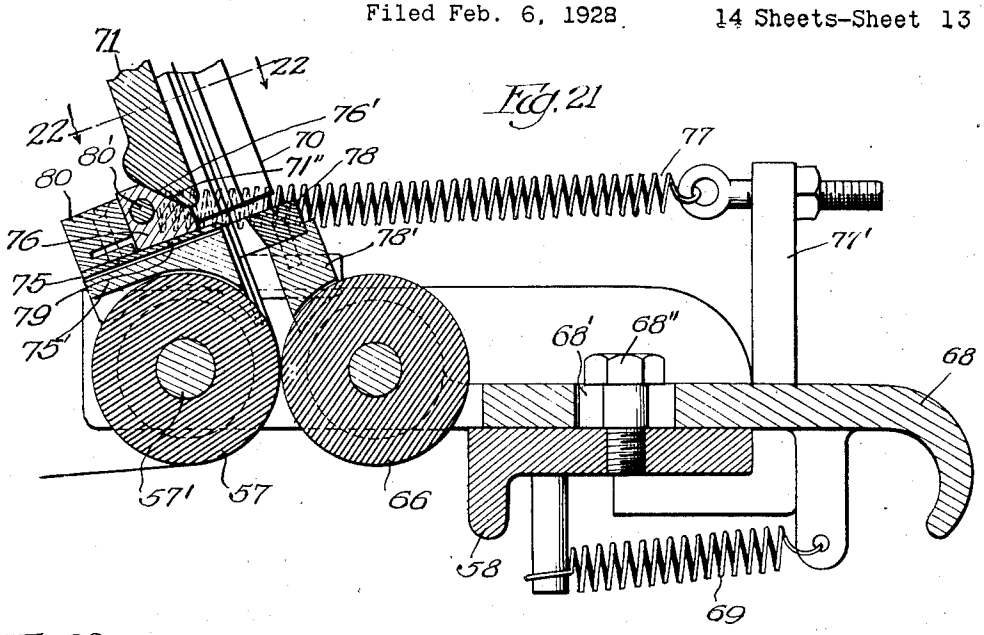

Fig. 22

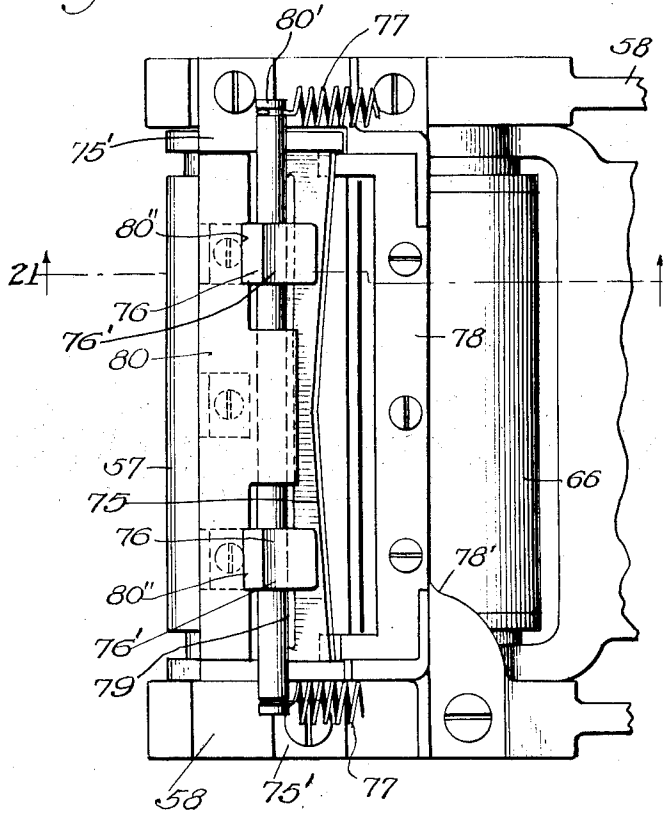

Fig. 23

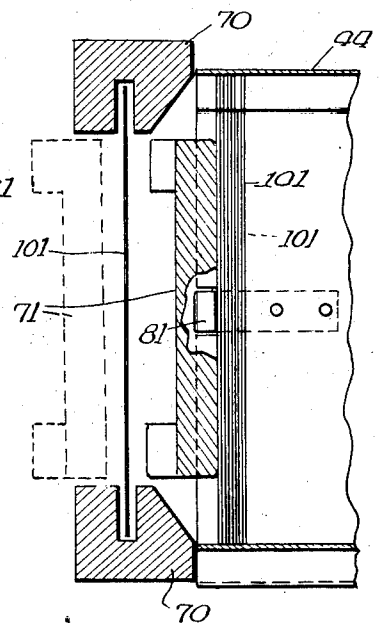

Inventors:
Henry E. Hubbard and
Cecil C. McCain.
By Wm. C. Belt Attty.

March 17, 1931. H. E. HUBBARD ET AL 1,796,524

PRINTING MACHINE

Filed Feb. 6, 1928 14 Sheets-Sheet 14

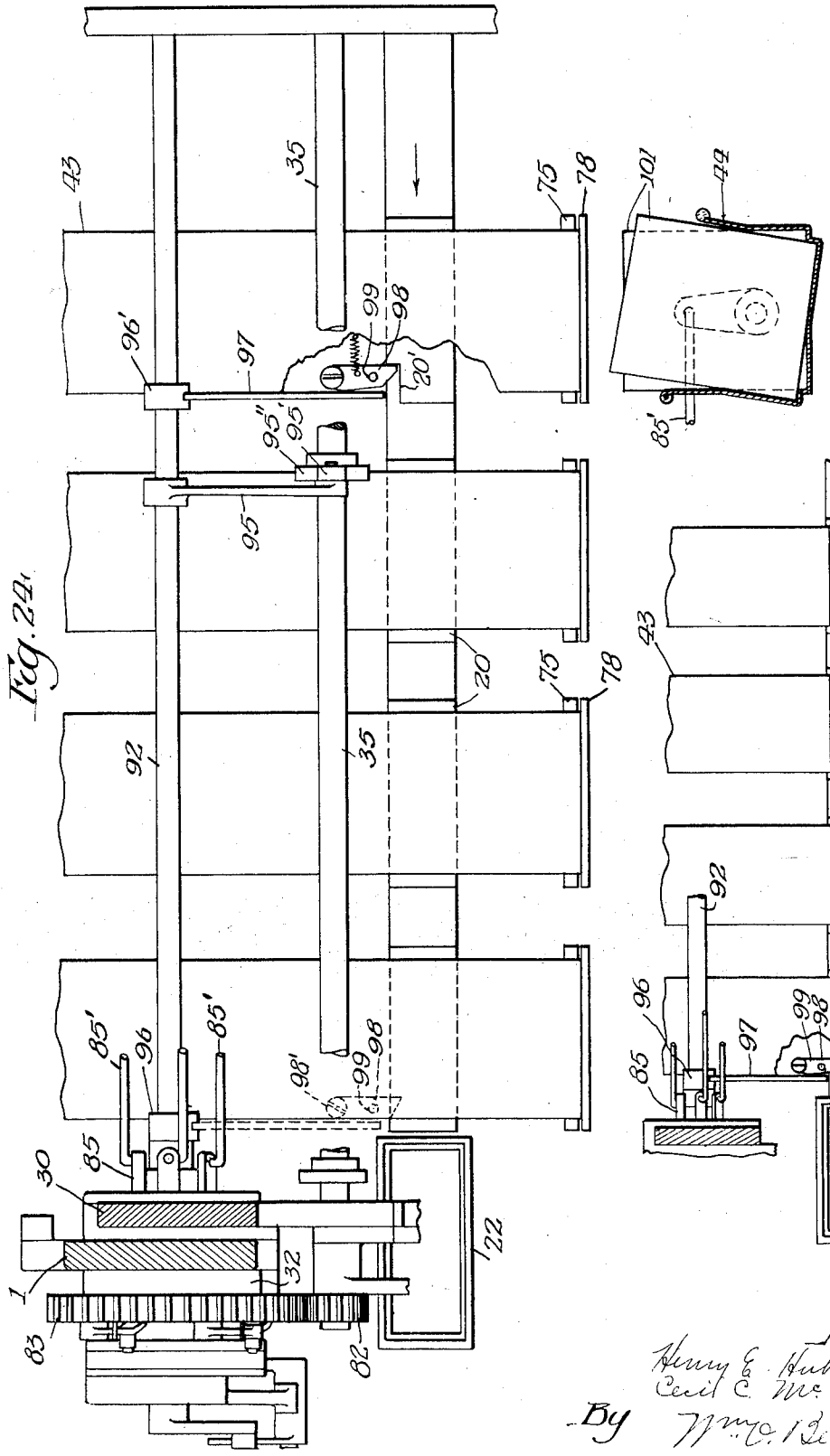

Fig. 24.

Fig. 25

Inventors:
Henry E. Hubbard and
Cecil C. McCain
By Wm. C. Beck Atty.

Patented Mar. 17, 1931

1,796,524

UNITED STATES PATENT OFFICE

HENRY E. HUBBARD, OF CHICAGO, AND CECIL C. McCAIN, OF GLEN ELLYN, ILLINOIS, ASSIGNORS TO ADDRESSOGRAPH COMPANY, OF WILMINGTON, DELAWARE, A CORPORATION OF DELAWARE

PRINTING MACHINE

Application filed February 6, 1928. Serial No. 252,166.

This invention relates to machines for printing cards or slips for use primarily by the Postal Service to identify bags or bundles of mail matter and its object is to provide an automatic machine of simple construction for making printing impressions on cards or slips from a plurality of printing devices which are run successively through the machine, and for identifying groups of the printed cards or slips according to a classification of the printing devices.

Another object of the invention is to provide a box or other receptacle for receiving the printed cards or slips in regular order and for automatically disposing the cards or slips in the box in different positions which enable them to be readily identified in groups according to a classification of the printing devices.

Another object is to automatically offset groups of printed cards or slips in different positions in the receiving box according to a classification of the printing devices so that the printed cards or slips may be readily sorted.

Another object is to provide simple means for easily and quickly converting the machine to print either cards or slips.

In the accompanying drawings we have illustrated the invention embodied in a machine for printing cards or slips for the Postal Service and referring thereto:

Fig. 1 is a front elevation of the machine two packer boxes being removed.

Fig. 2 is an elevation of the right or drive end of the machine.

Fig. 3 is an elevation of the left or printing plate discharge end of the machine.

Fig. 3*a* is a detail perspective view.

Fig. 4 is a plan view, partly in section on line 4—4 of Fig. 1, of the right half of the machine.

Fig. 4*a* is a detail perspective view.

Fig. 5 is a plan view, partly in section on line 5—5 of Fig. 1, of the left half of the machine.

Fig. 6 is a sectional view on the line 6—6 of Fig. 1.

Figs. 6*a* and 6*b* are detail sectional views.

Fig. 7 is a sectional view on the line 7—7 of Fig. 1.

Fig. 7*a* is a detail view.

Fig. 8 is an enlarged detail perspective view of a packer box.

Fig. 9, partly broken away and in section, illustrates the delaying mechanism with its switch in a normal position when plain printing devices are passing through the machine.

Fig. 10 is a similar view showing in full lines the position of parts indicating that two notched printing plates are traveling through the machine.

Fig. 11 is a sectional view on line 11—11 of Fig. 9.

Fig. 11*a* is a sectional view on line 11*a*—11*a* of Fig. 11.

Fig. 12 is a sectional view on the line 12—12 of Fig. 11.

Fig. 13 is an enlarged detail perspective view showing the selector finger and a notched printing plate at rest in printing position.

Fig. 14 is a similar view showing the selector finger being operated by a plain printing plate.

Fig. 15 is a view similar to Fig. 14 but showing the cam holding the selector feeler arm in up position while the printing plate is traveling between printing stations, and holding the selector finger and pin out of operative relation with the selector feeler arm.

Fig. 16 is a perspective view of a notched printing plate.

Fig. 17 illustrates a card printed in the machine.

Fig. 18 illustrates a slip printed in the machine.

Fig. 19 is an enlarged perspective view of the packer box and holder.

Fig. 20 is a transverse sectional view through the packer box and holder and showing the position of slips thereon.

Fig. 21 is a sectional view on line 21—21 of Fig. 22.

Fig. 22 is a plan view of the cutter devices.

Fig. 23 is a sectional view on line 22—22 of Fig. 21.

Fig. 24 is a diagrammatic view, partly in

section, showing the machine set for printing slips.

Fig. 25 is a smaller digrammatic view showing the machine set for printing cards.

We have shown the invention adapted for operating with one-piece printing plates and we will refer to them as such, but it will be understood that the invention can be used as herein shown and described with other forms of printing devices, requiring only such changes in the structure as will be necessary to accommodate the different forms, and the words "printing plate" as used herein will be understood as comprehending and including any and all forms of printing devices for which the invention is or may be adapted.

In the drawings 1 is the main frame and 2 is a drive shaft driven by the pulley 3 to which power may be applied from a motor 4 or other suitable source, Figs. 1 and 2. The drive shaft carries a bevel gear 2′ which drives a bevel gear 5 on the jack shaft 6 supported in bearings in the frame, Fig. 6. A crank arm 7 is mounted rigidly on the jack shaft 6, Fig. 1, and it carries a roller 8 which operates in the cam groove 9 in the arm 10 which is pivotally mounted on a pin 11 in the frame. A rocker arm 12 is pivotally mounted on the pin 11 and a lever 13 is pivotally mounted between its ends on a latch pin 14 carried by the free end of the rocker arm 12. A link 15 connects the upper end of the lever 13 with an ear 16 on the plate carrier bar 17, which is provided with a plurality of spring pressed feed dogs 18, Figs. 6, 6*b*. This carrier bar is reciprocated in a guideway 19 in the frame and the dogs engage and feed the printing devices 20 from the plate loading magazine 21 at the right end of the machine to the plate receiving magazine 22 at the left end of the machine in an intermittent movement with stops at each of the printing stations, four of which are shown in the machine illustrated. The cam arm 10 is oscillated on the pin 11 at each operation of the machine and the lever arm 13 is detachably locked to the cam arm by a latch 23 which is pivoted at 23′ on the cam arm and engages the latch pin 14, being held in engagement by a spring 24. Another spring 25 is fastened at one end to the lower end of the lever 13 and to the rocker arm 12 so that if a printing plate becomes jammed in traveling through the machine the lever arm may yield while the cam arm continues its regular oscillation. An angle lever 26 is pivoted on the frame and it carries a release finger 27 and is connected by a rod 28 with an eccentric throwoff handle 29. By operating the handle 29 the angle lever may be rocked to cause the finger 27 to lift the latch 23 out of engagement with the pin 14 to disconnect the plate feed and cause the plates to remain in stationary position for repetition printing.

A head 30, Figs. 1, 4, 6, 7, 11 and 12, extends transversely the width of the machine in the upper part of the main frame, and has two downwardly extending arms which are mounted on bushings 31, Fig. 4, and 32, Fig. 11, whereby the cam shaft, packer box and associated parts carried by the head may be swung upwardly out of operative position to lift the packer boxes and permit access to the printing plate carrier and to permit the ink ribbon to be changed. At the right end of the machine the head 30 is pivoted on a sleeve 31 rigidly secured in the main frame 1 by bolts 31′, Fig. 4. At the left end of the machine a sleeve 32 is rigidly secured by bolts 32′ to the head and is arranged to pivot in the main frame 1, Fig. 11.

Four partitions 33, one for each printing station, are secured in spaced relation within the head by screw bolts 34, Figs. 6–7. A cam shaft 35 is supported in bearings in the partitions and it is provided on its right end with a gear 36 which is driven from the gear 37 on the shaft 2 through the intermediate gears 36′, 36″ supported in the frame, Fig. 2. At each printing station there is a platen 38, carried by a platen arm 39 which is made in the form of a yoke having two rearwardly extending sides 39′ pivoted at 39″ on the main frame, Fig. 4*a*. The platen arm carries two rollers 40 which are engaged by cams 41 on the cam shaft 35 to depress the platen arm, which is normally held in up position by the spring 42, Fig. 6. The rollers 40, 40 of each platen arm are spaced apart at the free end of the arm opposite printing position and a distance substantially equal at least to the length of the printing plate, and the cam 41 is of sufficient width to engage the adjacent rollers 40, 40 of two adjacent platen arms. The printing operations at all of the stations are performed simultaneously and the spacing of the rollers and the arrangement of the cams for engaging two rollers of adjacent platen arms provides for a uniform pressure of all of the platens during all printing operations. The platen arm is made in the yoke form with spaced sides 39′ to permit the web of paper 43 to feed from the supply roll 43′, Fig. 2, between the sides of the platen arm, as shown in Fig. 4, through printing position. There is a paper supply roll for each printing station and all of the rolls are supported on the frame of the machine, Fig. 2.

The packer box 44 for each printing station, Figs. 8, 19, 20, has a bottom which inclines downwardly and outwardly from the longitudinal center providing a flat section 45 on one side of the center which lies in a plane with a ledge 45′ on the other side of the center, and a flat section 46, which lies in a plane with the oppositely disposed ledge 46′. The ledge 45′ is elevated above the outer edge of the flat section 46 and the ledge 46′ is elevated above the outer edge of the section 45 and the ledges and sections are preferably connected

integrally, the box being stamped out of sheet metal. The right side 47 of the packer box is shorter than the left side and it extends at right angles to the plane of the section 45 and the ledge 45′. The left side of the packer box has a bottom portion 48 which extends at right angles to the plane of the section 46 and the ledge 46′ and an upper section 48′ which projects above the side 47 and is substantially parallel therewith and at a right angle to the plane of the section 45 and the ledge 45′. A packer box holder 49, Figs. 7, 19, is pivotally secured by a pin 50 to the bottom of the partition 33. The forward end of the holder is forked and the arms 51 thereof are adapted to embrace the sides of the packer box 44 and to engage the side retaining flanges 52 thereon. Lugs 53 on the arms 51 engage the underside of the ledges 45′, 46′, Figs. 19, 20, and spring fingers 54 fastened to the bottom of the packer box engage the lugs 53 for holding the box in fixed position on the holder.

An ink ribbon 55 extends through printing position just above the printing plates and it is mounted on spools 56, 56′ in a ribbon holding and reversing mechanism supported at the top of the frame and fully set forth and described in a concurrent application Serial No. 263,768 filed March 22, 1928.

The paper webs 43 are drawn from the supply rolls 43′, Fig. 2, through printing position by the feed rolls 57, which are mounted on the shaft 57′ supported in the frame 58 carried by brackets 58′ on the head 30, Figs. 1, 6. The feed roll shaft 57′ projects through the left end of the machine and carries a loose gear 59 which is operated by the segment gear 60, Fig. 3. An arm 61 rigid with the gear 59 carries a pawl 61′ which engages a ratchet 61″ rigid on the feed roll shaft 57′, for operating the feed rolls Figs. 3, 3*a*. By providing the pawl and ratchet between the gear and the feed roll shaft the feed rolls are prevented from turning in a reverse direction upon the return movement of the segment. The segment gear 60 is pivoted at 60′ on the bracket 62 which is fastened by bolts 62′ to the head, Fig. 5. A crank disk 63 on the cam shaft 35 has a transverse slot 63′ and a block 64 is adjustably secured in this slot and travels in the cam slot 65 in the segment gear 60, Fig. 3. The block 64 is adjusted in the slot 63′ to control the movement of the segment gear so that the feed rollers will feed the webs of paper a predetermined distance at each cycle of operation of the machine.

For printing cards 100 the block will be adjusted to feed the paper the length of one card at each operation and the first card printed from a printing plate at the first printing station will not be severed from the web until the first card is printed from this printing device at the fourth printing station at which time the first web will have printing impressions from four different printing plates, as indicated in Figure 25. For printing slips 101 the block 64 will be adjusted to feed the paper a length corresponding to one slip 101 at each operation, each slip will be severed from the web as printed, as indicated in Fig. 24. In printing short cards 100 the pawl 61′, Fig. 3*a*, will travel a distance of one tooth on the ratchet 61″ at each printing operation, but for printing slips the pawl will travel a distance of five teeth on the ratchet at each printing operation. It will be understood that the parts are timed as shown in the drawings for printing cards or slips of the sizes indicated in Figs. 17 and 18, and that this timing may be changed to suit other conditions as will be readily understood. The printing plates may be provided with printing characters of any kind to print station data, addresses or any other information and after they travel through the several printing stations they may be deposited in a tray or other receiver for storage or for other purposes, as for example in the manner commonly employed in addressing machines. We refer to the invention as an addressing machine because it seems to indicate the type of machine more closely than would the term printing machine, but we do not wish it to be understood thereby that we are restricting the machine to the printing of addresses because it will be readily understood that the machine can be used with printing devices for printing any desired information.

Opposite each feed roller 57 and cooperating therewith there is a pressure roller 66, Figs. 6, 7 which is mounted in a slide holder 68 having slots 68′ to receive bolts 68″ whereby the slide holder is adjustably mounted on the head, Fig. 4. A spring 69 is fastened to the frame 58 and to the slide holder 68 to hold the pressure roller 66 in operative relation to the feed roller 57 and permit the pressure roller to be drawn away from the feed roller to facilitate insertion of the end of the paper web in the lower ends of the slotted guides 70 for the side edges of the web, Figs. 1, 4, 7.

A packer 71 is arranged above each feed roller opposite the entrance end of the packer box and operates between the side guides 70, Figs. 6, 23. A link 72 is pivoted at its upper end to the head at 72′ and at its lower end to the packer at 72″ and constitutes a swinging support for the packer, Fig. 7*a*. A curved cam lever 73 has its upper end pivotally connected to the head 30 at 73′ and its lower end pivotally connected at 73″ to a rear extension 71′ on the packer, Fig. 6*a*. A cam 74 on the cam shaft 35 is arranged to engage a roller 74′ on the cam lever 73 and impart a forward and backward movement to the packer, the swinging link support 72 effecting a straight line movement of the packer.

Means are provided for cutting the web below the packer after it has been printed and fed upward in the guides 70 between the packer and the entrance end of the packer box. A movable knife 75, Figs. 7, 21, 22, is slidably mounted on the frame 75′, which is secured to the frame 58 over each feed roller. Two blocks 76 are loosely mounted above each knife 75, and each block has a beveled front edge 76′ to engage the beveled bottom edge 71″ at the back of the packer. Springs 77 are connected at one end to the blocks 76 and at their other end to an arm 77′ on the paper feed and cutter frame 58. A stationary knife 78 is mounted in front of the moveable knife on a frame 78′, which is secured to the paper feed and cutter frame 58. The construction is such that the movable knife cooperates with the stationary knife to shear the paper which projects upward therebetween. The movable knife has a slot 79 located adjacent to the cutting edge and the blocks 76 are arranged to have their front ends pressed by the packer upon that part of the knife between the slot and the cutting edge to insure a shearing engagement of the cutting edge with the cutting edge of the stationary knife. A backing 80 is fastened to the movable knife 75 and has an extended central portion, Fig. 22, in which a rod 80′ is supported therein. The blocks 76 are loosely mounted on the rod and the springs 77 are connected to the ends of the rod. The blocks 76 engage recesses 80″ in the backing 80 which prevents movement of the blocks lengthwise of the rod 80′, but these blocks are otherwise loose on the rod so that they are capable of a limited movement about the rod when the beveled edge 76′ of the blocks engage the beveled edge 71″ of the packer. The movable knife is caused to travel forward with the packer by the springs 77 which hold the beveled edge 76′ of the blocks in wedging engagement with the beveled edge 71″ of the packer and consequently the cutting and packing operations take place at the same time. The movement of the packer is, however, much greater than that of the movable knife because the latter is limited in its forward movement after the severing operation is complete, by engagement with the side guides 70. The springs 77 extend at an angle to the line of movement of the movable knife to pull the blocks forward and downward in wedging action with the beveled lower edge of the packer. The packer presses the severed slip forward into the packer box against a suitable follower 44′ or against previously packed slips and a spring finger 81 is fastened on the bottom of the packer box, at the entrance end thereof over which the packer moves the severed slip and which prevents the bottom of the slip last packed from slipping back and out of the box into the path of the web. The packer forces the side edges of the slip out of the guides 70, Fig. 23, into the packer box and these guides overlap the side edges of the slip last packed in the box and cooperate with the spring finger 81 to retain the last slip packed in the box.

When the invention is used for postal work and cards or slips are printed to be applied to mail bags and packages of mail for delivery at a plurality of stations on a mail route, it is desirable to print a number of cards or slips for each station of the route to provide a supply for use as required, and the number to be printed will be predetermined according to the average number which it has been found are required for that station. For example, in preparing a supply of slips if it is desired to print sixteen slips for a particular station, four duplicate printing plates will be provided bearing the type characters necessary to print the data for that station and these printing devices will be arranged in the loading magazine in consecutive order. Each of these printing devices will be printed four times in their travel from the loading magazine to the receiving magazine, and once in each printing station and four printed slips will be packed in each of the packer boxes and will be collected by the operator and assembled for storage in the slip supply. The machine is intended to operate at a relatively high rate of speed, the loading magazine holds a large number of printing devices, and the printed cards or slips will be packed in the packer boxes faster than a single operator can conveniently remove them; so that it is desirable to provide means for easily and quickly distinguishing the printed cards or slips for the different stations which may be packed in the boxes. Some of the printing devices are plain and some are notched or otherwise suitably identified to make them index printing devices for classification purposes.

To this end we provide the printing device 20 last to be printed with a notch 20′, Figs. 13, 16 to cause the actuation of certain mechanism whereby the packer box is rocked to receive the slip printed by the notched printing device in a tilted position with reference to the slips from the preceding plain printing devices of a series. A small gear 82 rigid on the cam shaft 35, Figs. 5, 9, 10, 12, and 24 drives a large gear 83 loosely mounted on the sleeve 32 with a ratio of four to one. A sleeve 84 is rigidly secured to the sleeve 32 by a bolt 84′, Fig. 12. The sleeves 32 and 84 are slotted to receive the four slide bars 85 which are connected by the rods 85′ at 49′ to the holders 49 of the respective packer boxes. These slide bars are arranged symmetrically about the sleeve 84 and they carry rollers 85″ at their ends, Figs. 9, 10. A bracket 86 is

bolted to the sleeve 84, at the outer end thereof and this bracket is provided with an inwardly projecting cam flange 86′, Figs. 9, 11, which has a gap at its bottom, Fig. 10. Four levers 87 are pivoted at one end 87′ to the large gear 83, Figs. 9, 10. The free end of each lever 87 is provided with a side cam 88 and also with a roller 88′. The location of the cam levers 87 is such that the cams may engage the rollers 85″ on the slide bars 85. Normally the rollers 88′ travel on the flange 86′ and they are held in this position by stop pins 89. A rocker 90 is pivotally mounted on a pin 90′ in the bracket 86, Figs. 9–11, and one arm 90″ thereof carries a switch point 91 which is arranged to operate through the opening in the flange 86′. An oscillating shaft 92 is supported at its right end in a sleeve 31 rigid with the frame, Fig. 4, and at its left end in the sleeve 84 rigid with the head, Fig. 11. An arm 93 rigid on the shaft 92 carries a roller 93′ which is held in operative engagement with an arm 94 of the rocker 90 by a spring 94′, Fig. 9. A lever 95 is rigidly mounted on the oscillating shaft 92 and it carries a roller 95′ which engages a cam 95″ on the cam shaft 35, Figs. 4, 13–15. Two selector bar holders 96 and 96′ are rigidly secured on the shaft 92, one opposite the first printing station and the other opposite the fourth printing station, Fig. 24. A selector bar 97 is rigidly mounted in one of the holders. Selector feelers 98 are pivoted at 98′ on the main frame 1 and are provided with upstanding pins 99 and are held under the tension of springs 99′ normally in the path of movement of the printing devices 20 and at one side edge thereof. One of these selector feelers is located opposite the first printing station and the other selector feeler is located opposite the fourth printing station for cooperation with the selector bar which may be engaged with one or the other of the two selector bar holders.

This machine is adapted to print cards 100 or slips 101, Figs. 17, 18. For printing cards the selector bar 97 will be engaged with the holder 96, Fig. 25; for printing slips the selector bar will be engaged with the holder 96′, Fig. 24. I have shown the machine set for printing slips (except in Fig. 25) and when a notched plate comes to rest at first printing station as shown in Fig. 13, the free end of the selector feeler projects into the notch 20′ and the pin 99 on the selector feeler is then out of position to be engaged by the selector bar 97 which is caused to swing downward at this time by the cam 95″. When an unnotched plate comes to rest at first printing station as shown in Fig. 14, it will have swung the selector feeler to carry the pin into position to be engaged by the selector bar and prevent the selector bar from swinging downward and the shaft 92 from oscillating and prevents the cam lever 95 from being operated by the cam 95″. When the shaft 92 is oscillated by a notched plate, Fig. 13, the switch point 91 is swung out through the gap in the cam flange 86′ from its normal position, Fig. 9, to the position shown in Fig. 10 and the next cam roller 88′ approaching the switch point will travel over the point and inside of the cam flange. The large gear 83 revolves continuously, a quarter revolution for each printing cycle and the cam 88 on the cam lever 87 which has been swung into operative relation with the rollers 85″ on the slide bars 85 will engage the first roller in its path and slide the bar 85 connected with the packer box at first printing station to tilt the packer box sidewise for receiving a slip 101. Since the slip travels in upright position into the packer box and the packer box is in tilted position the slip will rest upon the flat section 46 and the ledge 46′, Fig. 20. In the next cycle of operation of the machine the cam 88 now working inside the cam flange will release the slide bar connected to the first station packer box and will operate the slide bar connected with the second station packer box and tilt this box as before described; and this operation will be repeated for the third and fourth printing stations. Immediately after the cam 88 and roller 88′ have entered the gap in the cam flange the spring 94′ returns the switch point through the gap to its normal position, Fig. 9, so that when the cam has operated the four slide bars its roller will travel on the switch point out through the gap and resume its normal position riding on the outside of the cam flange. Thus a notched plate will tilt each packer box in the four printing stations and cause the slip printed by that notched plate to be off-set in the box from the slips printed by unnotched plates, which rest upon the flat section 45 and the ledge 45′. If one notched plate follows another the operation just described will be duplicated and there will be two slips offset and resting upon the flat section 46 and ledge 46′, or as many as there may be notched plates. The slide bars are returned to normal position after the passage of the cam 88 by springs 102, Figs. 4, 5 and at the same time the packer boxes will be restored to their normal upright position.

The machine is designed to work with plain and with notched printing devices arranged in any order and in any combinations. The diagrammatic view, Fig. 24, and the detail views, Figs. 13–15, show a selector bar 97 engaged with holder 96′ at the right of the machine for printing slips; and it will be obvious that by shifting the selector bar 97 from the holder 96 to the holder 96′, as shown in broken lines in Fig. 24 and in full lines in Fig. 25, the machine will be set to print cards.

While we have shown and described the invention as embodied in a machine for printing cards and slips for the Postal Service we

are aware that it can be used for other purposes with such changes as may be necessary to adapt it for particular conditions, when required, and we do not limit the invention to this particular use. It will be apparent, also that the invention can be embodied in a machine with one printing station or with any desired number of printing stations and we have shown it provided with four printing stations because this machine has been found to suit Postal Service requirements. The cards and slips differ in size and are so designated to distinguish them; they may be made of the same stock, or of different stocks. To avoid needless repetition in the claims we will use the word "slips" to designate the product of the machine generically.

We are aware that changes in the form, construction and arrangement of parts may be made to adapt the invention for other uses than the one herein particularly described, or for other purposes, and we reserve the right to make all such changes as fall within the scope of the invention.

We claim:

1. In a machine for printing slips, the combination of means for feeding printing devices to printing position, printing means, a receiver comprising a packer box to receive the printed slips in stack relation, and means to tilt the packer box for disposing a printed slip in the packer box in offset position in the stack with respect to other slips therein for designating groups of slips in the stack according to a predetermined classification of the printing devices.

2. In a machine for printing slips, the combination of means for feeding printing devices to printing position, printing means, a receiver to receive the printed slips in upright position in a single stack and having means for supporting a printed slip in the receiver in an offset position with respect to other slips therein for grouping the slips according to a predetermined classification of the printing devices, and means automatically controlled by the printing device which printed that slip for operating said receiver to position said slip supporting means.

3. In a machine for printing slips, the combination of means for feeding printing devices to printing position, printing means, means for directing slips into upright position, a receiver to receive the printed slips in a single stack in upright position, and means for disposing a printed slip in the receiver in a different position with respect to other slips therein for grouping the slips according to a predetermined classification of the printing devices, said slip disposing means comprising a holder for rocking the receiver to tilt said differently positioned slips with respect to the other slips in the receiver.

4. In a machine for printing slips, the combination of means for feeding printing devices to printing position, printing means, a receiver comprising a packer box open at its receiving end and at its top for receiving printed slips in stacked relation and in upright position in a single stack, and means for supporting some of printed slips in said stack in the packer box in a different position with respect to other slips therein for grouping the slips according to a predetermined classification of the printing devices.

5. In a machine for printing slips, the combination of means for feeding printing devices to printing position, printing means, a receiver to receive the printed slips in upright position, means for disposing a printed slip in the receiver in a different position with respect to other slips therein for grouping the slips according to a predetermined classification of the printing devices, means for operating said slip, disposing means to tilt said differently positioned slips with respect to the other slips in the receiver, and means in said receiver for supporting said slips in tilted position.

6. In a machine for printing slips, the combination of means for feeding printing devices to printing position, printing means, a receiver to receive the printed slips in upright position, means for disposing a printed slip in the receiver in a different position with respect to other slips therein for grouping the slips according to a predetermined classification of the printing devices, means for operating said slip disposing means to tilt said differently positioned slips with respect to the other slips in the receiver, and means at the bottom of said receiver for holding said slips in tilted position in said receiver.

7. A combination according to claim 1 in which the packer box has a portion of one side inclined with respect to the other side.

8. A combination according to claim 1 in which the packer box having the lower portion of one side inclined with respect to the other side and the upper portion of said one side substantially parallel with said other side.

9. A combination according to claim 1 in which the packer box has a reversely inclined bottom and ledges at the side margins thereof to support the differently positioned slips.

10. A combination according to claim 1 in which the packer box having side ledges at its bottom and reversely inclined flat sections between said ledges, with each section lying in a plane with the ledge adjacent the other section.

11. A combination according to claim 1 in which the packer box is of a width at its upper portion to support the slips and of greater width at its lower portion to permit

the differently positioned slips to be supported in the box in tilted position with respect to each other.

12. In a machine for printing slips, the combination of means for feeding printing devices to printing position, printing means, a receiver comprising a packer box to receive the printed slips in a single stack, said packer box being movable to receive some of said printed slips in the stack in offset relation to the other printed slips in said stack, and means for moving said packer box relatively to the printing means for this purpose.

13. In a machine for printing slips, the combination of means for feeding devices to printing position, printing means, a receiver comprising a packer box for receiving a single stack of printed slips and pivotally mounted on said machine for rocking the stack relatively to the printing position, and means for swinging said packer about its pivot so that it receives some of said printed slips from the printing position in the stack in offset relation to the other slips received from said printing position.

14. In a machine for printing slips, the combination of means for feeding printing devices to printing position, printing means in said printing position, a packer box for receiving a single stack of printed slips from said printing means and movable relatively to the printing position for positioning some of said printed slips in the stack in different relation to the others in said stack, means in said packer box for supporting said differently positioned slips, a holder for said packer box pivotally mounted on the machine, and means controlled by the printing devices for actuating said holder to move said packer box.

15. A machine as described in claim 1 in which the means for disposing a printed slip in a different position with respect to other slips in the receiver comprises a holder for the receiver pivotally mounted on the machine adjacent to printing position, and means for automatically swinging the holder and receiver.

16. A machine as described in claim 1 in which the means for disposing a printed slip in a different position with respect to other slips in the receiver comprises a holder for the receiver pivotally mounted on the machine adjacent to printing position, and means automatically controlled by the printing device which printed the slip to be differently positioned for moving the holder and receiver from one position to another.

17. In a machine for printing slips, the combination of means for feeding printing devices to printing position, some of said devices being distinguished from others for classifying the devices according to a predetermined classification, printing means, a receiver disposed to receive the printed slips in a single stack, means for rocking the receiver to position the stack to receive at an angle the slips printed from the distinguished printing devices, said rocking means being controlled by those printing devices which are distinguished from others for classification purposes.

18. In a machine for printing slips, the combination of means for feeding printing devices to printing position, some of said printing devices being index devices for classification purposes and some being plain, printing means, a receiver movably mounted relatively to the printing position to receive the printed slips in upright position in a single stack, and selector means controlled by the index printing devices during their travel to printing position for moving the receiver whereby the slips printed by index printing devices are positioned in said receiver in offset relation to the slips printed by plain printing devices.

19. In a printing machine for printing slips, the combination of means for feeding printing devices to printing position, some of said printing devices being notched to constitute index devices for classification purposes and other printing devices being plain, printing means, a receiver shiftable relatively to the printing position to receive the printed slips in upright position and in a single stack, a selector feeler operatively engaging each printing device as it passes to printing position, and means operated by said feeler to move the receiver into a position for receiving the printed slips from notched printing devices in offset relation in the stack to the printed slips from plain printing devices.

20. In a machine for printing slips and having a plurality of printing stations, the combination of means for feeding printing devices successively to the several printing stations, printing means, a receiver at each printing station to receive the printed slips therefrom, and means automatically operated by certain printing devices for selectively positioning the printed slips from said printing devices in a different position in the receivers from the printed slips from other printing devices.

21. In a machine for printing slips and having a plurality of printing stations, the combination of means for feeding printing devices successively to the several printing stations, printing means, a movable receiver at each printing station to receive the printed slips therefrom, and means automatically operated by certain printing devices for moving the receiver to selectively position the printed slips from said printing devices in a different position in the receivers from the printed slips from other printing devices.

22. In a machine for printing slips and having a plurality of printing stations, the

combination of means for feeding printing devices successively to the several printing stations, printing means, a receiver pivoted on the machine at each printing station to receive the printed slips therefrom, and means automatically operated by certain printing devices for rocking the receivers to selectively position the printed slips from said printing devices in a different position in the receivers from the printed slips from other printing devices.

23. In a machine for printing slips and having a plurality of printing stations, the combination of means for feeding printing devices successively to the several printing stations, printing means, a movable receiver at each printing station to receive the printed slips therefrom, and means automatically operated by certain printing devices at the first printing station for moving the receivers successively to selectively position the printed slips from said printing devices in a different position in the receivers from the printed slips from other printing devices.

24. In a machine for printing slips and having a plurality of printing stations, the combination of means for feeding printing devices successively to the several printing stations, printing means, a receiver pivoted on the machine at each printing station to receive the printed slips therefrom, and means automatically operated by certain printing devices at the first printing station for rocking the receivers successively to selectively position the printed slips from said printing devices in a different position in the receivers from the printed slips from other printing devices.

25. In a machine for printing slips of two different sizes and having a plurality of printing stations, the combination of means for feeding printing devices successively to the several printing stations, printing means, a receiver at each printing station to receive the printed slips therefrom, means for selectively positioning the printed slips from certain printing devices in a different position in the receivers from the printed slips from other printing devices, and means operable at selective positions on the machine determined by the size of the slip to be printed and controlling said selective positioning means.

26. In a printing machine, the combination of means for feeding printing devices and a web of paper to be printed to printing position, printing means, a receiver, means for severing the paper after it is printed and delivering the printed slip into the receiver, and means for disposing a printed slip in a different position with respect to other slips in the receiver for grouping the slips according to a predetermined classification of the printing devices.

27. In a printing machine having a plurality of printing stations, the combination of means for feeding printing devices and webs of paper to be printed to the printing stations, printing means, a receiver for each printing station, means for severing the printed paper and delivering the severed slips into the receivers, and means for disposing the printed slips from selected printing devices in a different position in the receivers from the printed slips from other printing devices for grouping the slips according to a predetermined classification of the printing devices.

28. In a printing machine having a plurality of printing stations, the combination of means for feeding printing devices and webs of paper to be printed to the printing stations, printing means, a movable receiver for each printing station, means for severing the printed paper and delivering the severed slips into the receivers, means for adjusting said severing and delivering means to produce slips of different sizes, and means operable at selected positions on the machine and adapted to be operated by selected printing devices to automatically move said receivers for disposing the printed slips from said printing devices in a different position with respect to other slips in the receiver for grouping the slips according to a predetermined classification of the printing devices.

29. A machine as described in claim 21 in which the receiver moving means comprises successively operated slide bars connected to the receivers.

30. A machine as described in claim 21 in which the receiver moving means comprises a slide bar for each receiver and cam devices for operating said slide bars to successively move the receivers.

31. A machine as described in claim 21 in which the receiver moving means comprises a cam flange having a gap and a plurality of cams operatively engaging said flange.

32. A machine as described in claim 21 in which the receiver moving means comprises a plurality of slide bars connected to the receivers, a cam flange having a gap, and a plurality of cam devices adapted to travel on the outside of said flange or to pass through the gap and operatively engage said slide bars.

33. A machine as described in claim 21 in which the receiver moving means comprises a plurality of slide bars connected to the receivers, a cam flange having a gap, a plurality of cam devices adapted to travel on the outside of said flange or to pass through the gap and operatively engage said slide bars, and a switch device operating at said gap in the flange for directing the travel of the cam devices.

34. A combination according to claim 1 in which the packer box has side retainer flanges, a holder for the box pivotally mounted in the machine and having a forked

end the arms of which embrace the sides of the packer box and engage said retainer flanges, and lugs on said arms engaging the bottom of the box.

35. A combination according to claim 1, in combination with a packer for delivering the printed slips into the box in upright position, and a spring finger at the bottom of the box to engage the last slip and assist in retaining the slips in the box.

36. A machine as described in claim 1 in combination with a packer automatically operated for pushing the printed slips into the receiver.

37. In a machine for printing slips, the combination of a frame, means on the frame for feeding printing devices to printing position, a platen supported on the frame, a head on the frame, means on the head for operating the platen, a movable receiver on the head to receive the printed slips in upright position, a packer on the head for moving the severed slip into the receiver, and means on the head for moving the receiver to dispose a printed slip in the receiver in a different position with respect to other slips therein for grouping the slips according to a predetermined classification of the printing devices, said head being pivoted on the frame to permit it and its associated parts to be swung upward into inoperative position and permit access to parts on the frame beneath the head.

38. In a machine for printing slips, the combination of a frame, means on the frame for feeding printing devices to printing position, a platen supported on the frame, a head on the frame, means on the head for operating the platen, means on the frame for feeding a web of paper to printing position, means on the head for severing the printed slip from the web, a movable receiver on the head to receive the printed slips in upright position, a packer on the head for moving the severed slip into the receiver, and means on the head for moving the receiver to dispose a printed slip in the receiver in a different position with respect to other slips therein for grouping the slips according to a predetermined classification of the printing devices, said head being pivoted on the frame to permit it and its associated parts to be swung upward into inoperative position and permit access to parts on the frame beneath the head.

39. The combination of means for feeding printing devices to printing position, some of said printing devices being index devices for classification, means for feeding through printing position a strip to be printed with successive impressions from said printing devices, a cutter for severing slips with printed impressions from the strip in timed relation to the printing operation, a receiver for the printed slips, positioning means controlled by the index printing devices for positioning the slips printed thereby in different relation to the others in the receiver, and means the operation of which is determined by the number of printed impressions between printing position and the receiver for delaying the positioning means until the slip printed by the index device reaches the receiver.

HENRY E. HUBBARD.
CECIL C. McCAIN.