OPIC
OFFICE DE LA PROPRIÉTÉ INTELLECTUELLE DU CANADA

CIPO
CANADIAN INTELLECTUAL PROPERTY OFFICE

(12) (19) (CA) **Demande-Application**

(21) (A1) **2,246,545**
(86) 1997/02/28
(87) 1997/09/04

(72) NEVITT, Timothy J., US
(72) KOTZ, Arthur L., US
(72) FREIER, David G., US
(72) ALLEN, Richard C., US
(71) MINNESOTA MINING AND MANUFACTURING COMPANY, US

(51) Int.Cl.[6] G02B 5/30, G02B 6/126, G02B 1/04, F21V 8/00
(30) 1996/02/29 (08/610,092) US

(54) **FIBRE OPTIQUE A EXTRACTEUR DE LUMIERE**
(54) **OPTICAL FIBER WITH LIGHT EXTRACTOR**

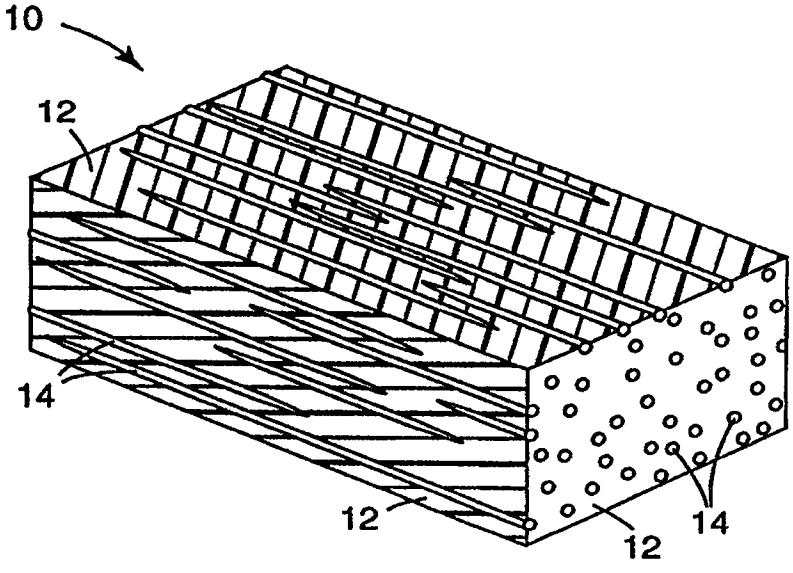

(57) Un extracteur de lumière comprend une phase dispersée de particules polymères disposées à l'intérieur d'une matrice biréfringente continue. L'extracteur est orienté, typiquement par étirage, dans une ou plusieurs directions. La taille et la forme des particules en phase dispersée, la fraction volumique de la phase dispersée, l'épaisseur des couches minces et le nombre d'orientations sont choisies afin d'atteindre un degré voulu de réflexion diffuse et de transmission totale de rayonnements électromagnétiques d'une longueur d'onde voulue dans l'extracteur obtenu.

(57) A light extractor is provided which comprises a disperse phase of polymeric particles disposed within a continuous birefringent matrix. The extractor is oriented, typically by stretching, in one or more directions. The size and shape of the disperse phase particles, the volume fraction of the disperse phase, the film thickness, and the amount of orientation are chosen to attain a desired degree of diffuse reflection and total transmission of electromagnetic radiation of a desired wavelength in the resulting extractor.

CA 02246545 1998-08-17

PCT

WORLD INTELLECTUAL PROPERTY ORGANIZATION
International Bureau

INTERNATIONAL APPLICATION PUBLISHED UNDER THE PATENT COOPERATION TREATY (PCT)

(51) International Patent Classification 6 : G02B 6/12, F21V 8/00

A1

(11) International Publication Number: WO 97/32230

(43) International Publication Date: 4 September 1997 (04.09.97)

(21) International Application Number: PCT/US97/03130

(22) International Filing Date: 28 February 1997 (28.02.97)

(30) Priority Data:
08/610,092 29 February 1996 (29.02.96) US

(71) Applicant: MINNESOTA MINING AND MANUFACTURING COMPANY [US/US]; 3M Center, P.O. Box 33427, Saint Paul, MN 55133-3427 (US).

(72) Inventors: NEVITT, Timothy, J.; P.O. Box 33427, Saint Paul, MN 55133-3427 (US). KOTZ, Arthur, L.; P.O. Box 33427, Saint Paul, MN 55133-3427 (US). FREIER, David, G.; P.O. Box 33427, Saint Paul, MN 55133-3427 (US). ALLEN, Richard, C.; P.O. Box 33427, Saint Paul, MN 55133-3427 (US).

(74) Agents: FORTKORT, John, A. et al.; Minnesota Mining and Manufacturing Company, Office of Intellectual Property Counsel, P.O. Box 33427, Saint Paul, MN 55133-3427 (US).

(81) Designated States: AL, AM, AT, AU, AZ, BA, BB, BG, BR, BY, CA, CH, CN, CU, CZ, DE, DK, EE, ES, FI, GB, GE, GH, HU, IL, IS, JP, KE, KG, KP, KR, KZ, LC, LK, LR, LS, LT, LU, LV, MD, MG, MK, MN, MW, MX, NO, NZ, PL, PT, RO, RU, SD, SE, SG, SI, SK, TJ, TM, TR, TT, UA, UG, UZ, VN, YU, ARIPO patent (GH, KE, LS, MW, SD, SZ, UG), Eurasian patent (AM, AZ, BY, KG, KZ, MD, RU, TJ, TM), European patent (AT, BE, CH, DE, DK, ES, FI, FR, GB, GR, IE, IT, LU, MC, NL, PT, SE), OAPI patent (BF, BJ, CF, CG, CI, CM, GA, GN, ML, MR, NE, SN, TD, TG).

Published
With international search report.
Before the expiration of the time limit for amending the claims and to be republished in the event of the receipt of amendments.

(54) Title: OPTICAL FIBER WITH LIGHT EXTRACTOR

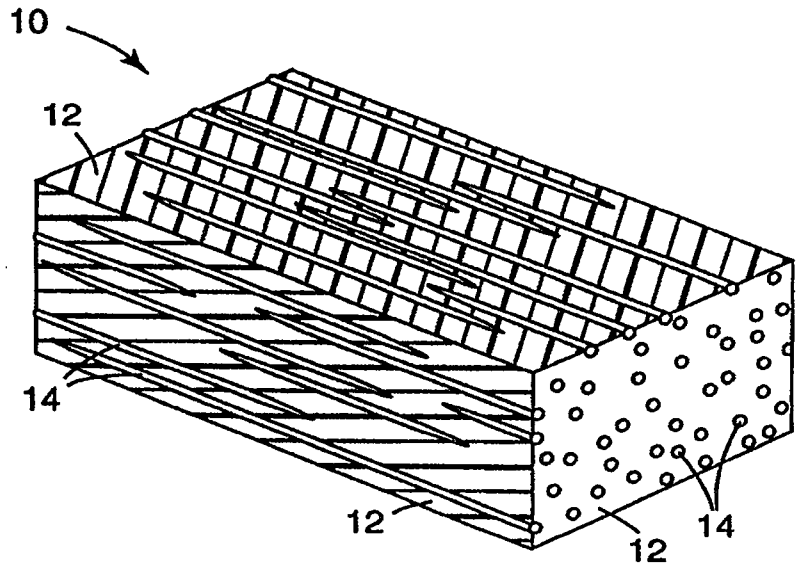

(57) Abstract

A light extractor is provided which comprises a disperse phase of polymeric particles disposed within a continuous birefringent matrix. The extractor is oriented, typically by stretching, in one or more directions. The size and shape of the disperse phase particles, the volume fraction of the disperse phase, the film thickness, and the amount of orientation are chosen to attain a desired degree of diffuse reflection and total transmission of electromagnetic radiation of a desired wavelength in the resulting extractor.

OPTICAL FIBER WITH LIGHT EXTRACTOR

Field of the Invention

This invention relates to optical materials which contain structures suitable for controlling optical characteristics, such as reflectance and transmission. In a further aspect, it relates to the use of such materials as light extractors for optical fibers.

Background

Optical films are known to the art which are constructed from inclusions dispersed within a continuous matrix. The characteristics of these inclusions can be manipulated to provide a range of reflective and transmissive properties to the film. These characteristics include inclusion size with respect to wavelength within the film, inclusion shape and alignment, inclusion volumetric fill factor and the degree of refractive index mismatch with the continuous matrix along the film's three orthogonal axes.

Conventional absorbing (dichroic) polarizers have, as their inclusion phase, inorganic rod-like chains of light-absorbing iodine which are aligned within a polymer matrix. Such a film will tend to absorb light polarized with its electric field vector aligned parallel to the rod-like iodine chains, and to transmit light polarized perpendicular to the rods. Because the iodine chains have two or more dimensions that are small compared to the wavelength of visible light, and because the number of chains per cubic wavelength of light is large, the optical properties of such a film are predominately specular, with very little diffuse transmission through the film or diffuse reflection from the film surfaces. Like most other commercially available polarizers, these polarizing films are based on polarization-selective absorption.

Films filled with inorganic inclusions with different characteristics can provide other optical transmission and reflective properties. For example, coated

mica flakes with two or more dimensions that are large compared with visible wavelengths, have been incorporated into polymeric films and into paints to impart a metallic glitter. These flakes can be manipulated to lie in the plane of the film, thereby imparting a strong directional dependence to the reflective appearance. Such an effect can be used to produce security screens that are highly reflective for certain viewing angles, and transmissive for other viewing angles. Large flakes having a coloration (specularly selective reflection) that depends on alignment with respect to incident light, can be incorporated into a film to provide evidence of tampering. In this application, it is necessary that all the flakes in the film be similarly aligned with respect to each other.

However, optical films made from polymers filled with inorganic inclusions suffer from a variety of infirmities. Typically, adhesion between the inorganic particles and the polymer matrix is poor. Consequently, the optical properties of the film decline when stress or strain is applied across the matrix, both because the bond between the matrix and the inclusions is compromised, and because the rigid inorganic inclusions may be fractured. Furthermore, alignment of inorganic inclusions requires process steps and considerations that complicate manufacturing.

Other films, such as that disclosed in U.S. 4,688,900 (Doane et. al.), consists of a clear light-transmitting continuous polymer matrix, with droplets of light modulating liquid crystals dispersed within. Stretching of the material reportedly results in a distortion of the liquid crystal droplet from a spherical to an ellipsoidal shape, with the long axis of the ellipsoid parallel to the direction of stretch. U.S. 5,301,041 (Konuma et al.) make a similar disclosure, but achieve the distortion of the liquid crystal droplet through the application of pressure. A. Aphonin, "Optical Properties of Stretched Polymer Dispersed Liquid Crystal Films: Angle-Dependent Polarized Light Scattering, Liquid Crystals, Vol. 19, No. 4, 469-480 (1995), discusses the optical properties of stretched films consisting of liquid crystal droplets disposed within a polymer matrix. He reports that the elongation of the droplets into an ellipsoidal shape, with their long axes parallel to the stretch direction, imparts an oriented birefringence (refractive index difference

among the dimensional axes of the droplet) to the droplets, resulting in a relative refractive index mismatch between the dispersed and continuous phases along certain film axes, and a relative index match along the other film axes. Such liquid crystal droplets are not small as compared to visible wavelengths in the film, and thus the optical properties of such films have a substantial diffuse component to their reflective and transmissive properties. Aphonin suggests the use of these materials as a polarizing diffuser for backlit twisted nematic LCDs. However, optical films employing liquid crystals as the disperse phase are substantially limited in the degree of refractive index mismatch between the matrix phase and the dispersed phase. Furthermore, the birefringence of the liquid crystal component of such films is typically sensitive to temperature.

U. S. 5,268,225 (Isayev) discloses a composite laminate made from thermotropic liquid crystal polymer blends. The blend consists of two liquid crystal polymers which are immiscible with each other. The blends may be cast into a film consisting of a dispersed inclusion phase and a continuous phase. When the film is stretched, the dispersed phase forms a series of fibers whose axes are aligned in the direction of stretch. While the film is described as having improved mechanical properties, no mention is made of the optical properties of the film. However, due to their liquid crystal nature, films of this type would suffer from the infirmities of other liquid crystal materials discussed above.

Still other films have been made to exhibit desirable optical properties through the application of electric or magnetic fields. For example, U. S. 5,008,807 (Waters et al.) describes a liquid crystal device which consists of a layer of fibers permeated with liquid crystal material and disposed between two electrodes. A voltage across the electrodes produces an electric field which changes the birefringent properties of the liquid crystal material, resulting in various degrees of mismatch between the refractive indices of the fibers and the liquid crystal. However, the requirement of an electric or magnetic field is inconvenient and undesirable in many applications, particularly those where existing fields might produce interference.

Other optical films have been made by incorporating a dispersion of inclusions of a first polymer into a second polymer, and then stretching the resulting composite in one or two directions. U. S. 4,871,784 (Otonari et al.) is exemplative of this technology. The polymers are selected such that there is low adhesion between the dispersed phase and the surrounding matrix polymer, so that an elliptical void is formed around each inclusion when the film is stretched. Such voids have dimensions of the order of visible wavelengths. The refractive index mismatch between the void and the polymer in these "microvoided" films is typically quite large (about 0.5), causing substantial diffuse reflection. However, the optical properties of microvoided materials are difficult to control because of variations of the geometry of the interfaces, and it is not possible to produce a film axis for which refractive indices are relatively matched, as would be useful for polarization-sensitive optical properties. Furthermore, the voids in such material can be easily collapsed through exposure to heat and pressure.

Optical films have also been made wherein a dispersed phase is deterministically arranged in an ordered pattern within a continuous matrix. U. S. 5,217,794 (Schrenk) is exemplative of this technology. There, a lamellar polymeric film is disclosed which is made of polymeric inclusions which are large compared with wavelength on two axes, disposed within a continuous matrix of another polymeric material. The refractive index of the dispersed phase differs significantly from that of the continuous phase along one or more of the laminate's axes, and is relatively well matched along another. Because of the ordering of the dispersed phase, films of this type exhibit strong iridescence (i.e., interference-based angle dependent coloring) for instances in which they are substantially reflective. As a result, such films have seen limited use for optical applications where optical diffusion is desirable.

There thus remains a need in the art for an optical material consisting of a continuous and a dispersed phase, wherein the refractive index mismatch between the two phases along the material's three dimensional axes can be conveniently and permanently manipulated to achieve desirable degrees of diffuse and specular reflection and transmission, wherein the optical material is stable with respect to

stress, strain, temperature differences, and electric and magnetic fields, and wherein the optical material has an insignificant level of iridescence. These and other needs are met by the present invention, as hereinafter disclosed.

Brief Description of the Drawings

FIG. 1 is a schematic drawing illustrating an optical body made in accordance with the present invention, wherein the disperse phase is arranged as a series of elongated masses having an essentially circular cross-section;

FIG. 2 is a schematic drawing illustrating an optical body made in accordance with the present invention, wherein the disperse phase is arranged as a series of elongated masses having an essentially elliptical cross-section;

FIGS. 3a-e are schematic drawings illustrating various shapes of the disperse phase in an optical body made in accordance with the present invention;

FIG. 4a is a graph of the bidirectional scatter distribution as a function of scattered angle for an oriented film in accordance with the present invention for light polarized perpendicular to orientation direction;

FIG. 4b is a graph of the bidirectional scatter distribution as a function of scattered angle for an oriented film in accordance with the present invention for light polarized parallel to orientation direction;

FIG. 5 is a schematic representation of a multilayer film made in accordance with the present invention;

FIGS. 6a and 6b are electron micrographs of optical films made in accordance with the present invention;

FIG. 7 is a perpendicular transmission spectrum for films made in accordance with the present invention;

FIG. 8 is a schematic diagram illustrating the use of the films of the present invention as high efficiency light extractors for optical fibers; and

FIGS. 9A and 9B are graphs showing relative gain as a function of angle for the films of the present invention and for a commercially available optical film, respectively.

Summary of the Invention

In one aspect, the present invention relates to a diffusely reflective film or other optical body comprising a birefringent continuous polymeric phase and a substantially nonbirefringent disperse phase disposed within the continuous phase. The indices of refraction of the continuous and disperse phases are substantially mismatched (i.e., differ from one another by more than about 0.05) along a first of three mutually orthogonal axes, and are substantially matched (i.e., differ by less than about 0.05) along a second of three mutually orthogonal axes. In some embodiments, the indices of refraction of the continuous and disperse phases can be substantially matched or mismatched along, or parallel to, a third of three mutually orthogonal axes to produce a mirror or a polarizer. Incident light polarized along, or parallel to, a mismatched axis is scattered, resulting in significant diffuse reflection. Incident light polarized along a matched axis is scattered to a much lesser degree and is significantly spectrally transmitted. These properties can be used to make optical films for a variety of uses, including low loss (significantly nonabsorbing) reflective polarizers for which polarizations of light that are not significantly transmitted are diffusely reflected.

In a related aspect, the present invention relates to an optical film or other optical body comprising a birefringent continuous phase and a disperse phase, wherein the indices of refraction of the continuous and disperse phases are substantially matched (i.e., wherein the index difference between the continuous and disperse phases is less than about 0.05) along an axis perpendicular to a surface of the optical body.

In another aspect, the present invention relates to a composite optical body comprising a polymeric continuous birefringent first phase in which the disperse second phase may be birefringent, but in which the degree of match and mismatch in at least two orthogonal directions is primarily due to the birefringence of the first phase.

In still another aspect, the present invention relates to a method for obtaining a diffuse reflective polarizer, comprising the steps of: providing a first resin, whose degree of birefringence can be altered by application of a force field,

as through dimensional orientation or an applied electric field, such that the resulting resin material has, for at least two orthogonal directions, an index of refraction difference of more than about 0.05; providing a second resin, dispersed within the first resin; and applying said force field to the composite of both resins such that the indices of the two resins are approximately matched to within less than about 0.05 in one of two directions, and the index difference between first and second resins in the other of two directions is greater than about 0.05. In a related embodiment, the second resin is dispersed in the first resin after imposition of the force field and subsequent alteration of the birefringence of the first resin.

In yet another aspect, the present invention relates to an optical body acting as a reflective polarizer with a high extinction ratio. In this aspect, the index difference in the match direction is chosen as small as possible and the difference in the mismatch direction is maximized. The volume fraction, thickness, and disperse phase particle size and shape can be chosen to maximize the extinction ratio, although the relative importance of optical transmission and reflection for the different polarizations may vary for different applications.

In another aspect, the present invention relates to an optical body comprising a continuous phase, a disperse phase whose index of refraction differs from said continuous phase by greater than about 0.05 along a first axis and by less than about 0.05 along a second axis orthogonal to said first axis, and a dichroic dye. The optical body is preferably oriented along at least one axis. The dichroic dye improves the extinction coefficient of the optical body by absorbing, in addition to scattering, light polarized parallel to the axis of orientation.

In another aspect of the present invention, an optical body is provided which has at least first and second phases that are co-continuous along at least one axis. The index of refraction of the first phase differs from that of the second phase by greater than about 0.05 along a first axis and by less than about 0.05 along a second axis orthogonal to said first axis. In other embodiments, three or more co-continuous phases may be used to achieve the same or similar matches and mismatches along mutually perpendicular axes.

In still another aspect of the present invention, an optical body is provided which comprises a film having a continuous and disperse phase, with an antireflective layer disposed thereon. Such films exhibit a flat transmission curve as a function of the wavelength of light, which tends to minimize any changes in color to a resultant display device into which the reflective polarizer is incorporated.

In the various aspects of the present invention, the reflection and transmission properties for at least two orthogonal polarizations of incident light are determined by the selection or manipulation of various parameters, including the optical indices of the continuous and disperse phases, the size and shape of the disperse phase particles, the volume fraction of the disperse phase, the thickness of the optical body through which some fraction of the incident light is to pass, and the wavelength or wavelength band of electromagnetic radiation of interest.

The magnitude of the index match or mismatch along a particular axis will directly affect the degree of scattering of light polarized along that axis. In general, scattering power varies as the square of the index mismatch. Thus, the larger the index mismatch along a particular axis, the stronger the scattering of light polarized along that axis. Conversely, when the mismatch along a particular axis is small, light polarized along that axis is scattered to a lesser extent and is thereby transmitted specularly through the volume of the body.

The size of the disperse phase also can have a significant effect on scattering. If the disperse phase particles are too small (i.e., less than about 1/30 the wavelength of light in the medium of interest) and if there are many particles per cubic wavelength, the optical body behaves as a medium with an effective index of refraction somewhat between the indices of the two phases along any given axis. In such a case, very little light is scattered. If the particles are too large, the light is specularly reflected from the particle surface, with very little diffusion into other directions. When the particles are too large in at least two orthogonal directions, undesirable iridescence effects can also occur. Practical limits may also be reached when particles become large in that the thickness of the

optical body becomes greater and desirable mechanical properties are compromised.

The shape of the particles of the disperse phase can also have an effect on the scattering of light. The depolarization factors of the particles for the electric field in the index of refraction match and mismatch directions can reduce or enhance the amount of scattering in a given direction. The effect can either add or detract from the amount of scattering from the index mismatch, but generally has a small influence on scattering in the preferred range of properties in the present invention.

The shape of the particles can also influence the degree of diffusion of light scattered from the particles. This shape effect is generally small but increases as the aspect ratio of the geometrical cross-section of the particle in the plane perpendicular to the direction of incidence of the light increases and as the particles get relatively larger. In general, in the operation of this invention, the disperse phase particles should be sized less than several wavelengths of light in one or two mutually orthogonal dimensions if diffuse, rather than specular, reflection is preferred.

Dimensional alignment is also found to have an effect on the scattering behavior of the disperse phase. In particular, it has been observed, in optical bodies made in accordance with the present invention, that aligned scatterers will not scatter light symmetrically about the directions of specular transmission or reflection as randomly aligned scatterers would. In particular, inclusions that have been elongated by orientation to resemble rods scatter light primarily along (or near) a cone centered on the orientation direction and having an edge along the specularly transmitted direction. For example, for light incident on such an elongated rod in a direction perpendicular to the orientation direction, the scattered light appears as a band of light in the plane perpendicular to the orientation direction with an intensity that decreases with increasing angle away from the specular directions. By tailoring the geometry of the inclusions, some control over the distribution of scattered light can be achieved both in the transmissive hemisphere and in the reflective hemisphere.

The volume fraction of the disperse phase also affects the scattering of light in the optical bodies of the present invention. Within certain limits, increasing the volume fraction of the disperse phase tends to increase the amount of scattering that a light ray experiences after entering the body for both the match and mismatch directions of polarized light. This factor is important for controlling the reflection and transmission properties for a given application. However, if the volume fraction of the disperse phase becomes too large, light scattering diminishes. Without wishing to be bound by theory, this appears to be due to the fact that the disperse phase particles are closer together, in terms of the wavelength of light, so that the particles tend to act together as a smaller number of large effective particles.

The thickness of the optical body is also an important control parameter which can be manipulated to affect reflection and transmission properties in the present invention. As the thickness of the optical body increases, diffuse reflection also increases, and transmission, both specular and diffuse, decreases.

While the present invention will often be described herein with reference to the visible region of the spectrum, various embodiments of the present invention can be used to operate at different wavelengths (and thus frequencies) of electromagnetic radiation through appropriate scaling of the components of the optical body. Thus, as the wavelength increases, the linear size of the components of the optical body are increased so that the dimensions, measured in units of wavelength, remain approximately constant. Another major effect of changing wavelength is that, for most materials of interest, the index of refraction and the absorption coefficient change. However, the principles of index match and mismatch still apply at each wavelength of interest.

Detailed Description of the Invention

Introduction

As used herein, the terms "specular reflection" and "specular reflectance" refer to the reflectance of light rays into an emergent cone with a vertex angle of 16 degrees centered around the specular angle. The terms "diffuse reflection" or

"diffuse reflectance" refer to the reflection of rays that are outside the specular cone defined above. The terms "total reflectance" or "total reflection" refer to the combined reflectance of all light from a surface. Thus, total reflection is the sum of specular and diffuse reflection.

Similarly, the terms "specular transmission" and "specular transmittance" are used herein in reference to the transmission of rays into an emergent cone with a vertex angle of 16 degrees centered around the specular direction. The terms "diffuse transmission" and "diffuse transmittance" are used herein in reference to the transmission of all rays that are outside the specular cone defined above. The terms "total transmission" or "total transmittance" refer to the combined transmission of all light through an optical body. Thus, total transmission is the sum of specular and diffuse transmission.

As used herein, the term "extinction ratio" is defined to mean the ratio of total light transmitted in one polarization to the light transmitted in an orthogonal polarization.

FIGS. 1-2 illustrate a first embodiment of the present invention. In accordance with the invention, a diffusely reflective optical film **10** or other optical body is produced which consists of a birefringent matrix or continuous phase **12** and a discontinuous or disperse phase **14**. The birefringence of the continuous phase is typically at least about 0.05, preferably at least about 0.1, more preferably at least about 0.15, and most preferably at least about 0.2.

The indices of refraction of the continuous and disperse phases are substantially matched (i.e., differ by less than about 0.05) along a first of three mutually orthogonal axes, and are substantially mismatched (i.e., differ by more than about 0.05) along a second of three mutually orthogonal axes. Preferably, the indices of refraction of the continuous and disperse phases differ by less than about 0.03 in the match direction, more preferably, less than about 0.02, and most preferably, less than about 0.01. The indices of refraction of the continuous and disperse phases preferably differ in the mismatch direction by at least about 0.07, more preferably, by at least about 0.1, and most preferably, by at least about 0.2.

The mismatch in refractive indices along a particular axis has the effect that incident light polarized along that axis will be substantially scattered, resulting in a significant amount of reflection. By contrast, incident light polarized along an axis in which the refractive indices are matched will be spectrally transmitted or reflected with a much lesser degree of scattering. This effect can be utilized to make a variety of optical devices, including reflective polarizers and mirrors.

The present invention provides a practical and simple optical body and method for making a reflective polarizer, and also provides a means of obtaining a continuous range of optical properties according to the principles described herein. Also, very efficient low loss polarizers can be obtained with high extinction ratios. Other advantages are a wide range of practical materials for the disperse phase and the continuous phase, and a high degree of control in providing optical bodies of consistent and predictable high quality performance.

< p. 12a >

Effect of Index Match/Mismatch

In the preferred embodiment, the materials of at least one of the continuous and disperse phases are of a type that undergoes a change in refractive index upon orientation. Consequently, as the film is oriented in one or more directions, refractive index matches or mismatches are produced along one or more axes. By careful manipulation of orientation parameters and other processing conditions, the positive or negative birefringence of the matrix can be used to induce diffuse reflection or transmission of one or both polarizations of light along a given axis. The relative ratio between transmission and diffuse reflection is dependent on the concentration of the disperse phase inclusions, the thickness of the film, the square of the difference in the index of refraction between the continuous and disperse phases, the size and geometry of the disperse phase inclusions, and the wavelength or wavelength band of the incident radiation.

The magnitude of the index match or mismatch along a particular axis directly affects the degree of scattering of light polarized along that axis. In general, scattering power varies as the square of the index mismatch. Thus, the larger the index mismatch along a particular axis, the stronger the scattering of

AMENDED SHEET

In an inventive device comprising an inventive optical film or optical body at least about 5 to 70% of light of a first polarization is diffusely extracted.

The continuous phase or first phase 12 can be comprised of a thermoplastic resin. It can be a copolymer of at least one diol and a monomer selected from the group consisting of naphthalene dicarboxylic acid, isophthalic acid, dimethyl isophthalic acid, terephthalic acid and dimethyl terephthalic acid.

The discontinuous or disperse phase or second phase 14 can comprise a plurality of elongated masses whose major axes are substantially aligned along a common axis.

The optical body as an extractor can be stretched in at least one direction, wherein at least about 40% of light of a first polarization is diffusely transmitted through said optical body (10), and wherein said diffusely transmitted rays are distributed primarily along or near the surface of a cone whose surface contains the spectrally transmitted direction and whose axis is centred on the stretch direction.

Furthermore, an optical body usable as an elliptical polariser is provided wherein the absolute value of the difference in index of refraction of said first and second phases is Δn_1 along a first axis and Δn_2 along a second axis orthogonal to said first axis, wherein the absolute value of the difference between Δn_1 and Δn_2 is at least about 0.05, and wherein the diffuse reflectivity of said first and second phases taken together along at least one axis for at least one polarization of electromagnetic radiation is at least about 30%.

In this connection, the absolute value of the difference between Δn_1 and Δn_2 is at least about 0.1.

The first phase 12 can be a larger birefringence than the second phase (14) wherein the birefringence of the first phase is at least 0.02 greater than the birefringence of the second phase (14).

The optical body can also consist of a plurality of layers (20), wherein at least one of said layers comprises a first phase having a birefringence of at least about 0.05 and a second phase which is discontinuous along at least two of any three mutually orthogonal axes.

light polarized along that axis. Conversely, when the mismatch along a particular axis is small, light polarized along that axis is scattered to a lesser extent and is thereby transmitted specularly through the volume of the body.

FIGS. 4a-b demonstrate this effect in oriented films made in accordance with the present invention. There, a typical Bidirectional Scatter Distribution Function (BSDF) measurement is shown for normally incident light at 632.8 nm. The BSDF is described in J. Stover, "Optical Scattering Measurement and Analysis" (1990). The BSDF is shown as a function of scattered angle for polarizations of light both perpendicular and parallel to the axis of orientation. A scattered angle of zero corresponds to unscattered (spectrally transmitted) light. For light polarized in the index match direction (that is, perpendicular to the orientation direction) as in FIG. 4a, there is a significant specularly transmitted peak with a sizable component of diffusely transmitted light (scattering angle between 8 and 80 degrees), and a small component of diffusely reflected light (scattering angle larger than 100 degrees). For light polarized in the index mismatch direction (that is, parallel to the orientation direction) as in FIG. 4b, there is negligible specularly transmitted light and a greatly reduced component of diffusely transmitted light, and a sizable diffusely reflected component. It should be noted that the plane of scattering shown by these graphs is the plane perpendicular to the orientation direction where most of the scattered light exists for these elongated inclusions. Scattered light contributions outside of this plane are greatly reduced.

If the index of refraction of the inclusions (i.e., the disperse phase) matches that of the continuous host media along some axis, then incident light polarized with electric fields parallel to this axis will pass through unscattered regardless of the size, shape, and density of inclusions. If the indices are not matched along some axis, then the inclusions will scatter light polarized along this axis. For scatterers of a given cross-sectional area with dimensions larger than approximately $\lambda/30$ (where λ is the wavelength of light in the media), the strength of the scattering is largely determined by the index mismatch. The exact size, shape and alignment of a mismatched inclusion play a role in determining how

much light will be scattered into various directions from that inclusion. If the density and thickness of the scattering layer is sufficient, according to multiple scattering theory, incident light will be either reflected or absorbed, but not transmitted, regardless of the details of the scatterer size and shape.

When the material is to be used as a polarizer, it is preferably processed, as by stretching and allowing some dimensional relaxation in the cross stretch in-plane direction, so that the index of refraction difference between the continuous and disperse phases is large along a first axis in a plane parallel to a surface of the material and small along the other two orthogonal axes. This results in a large optical anisotropy for electromagnetic radiation of different polarizations.

Some of the polarizers within the scope of the present invention are elliptical polarizers. In general, elliptical polarizers will have a difference in index of refraction between the disperse phase and the continuous phase for both the stretch and cross-stretch directions. The ratio of forward to back scattering is dependent on the difference in refractive index between the disperse and continuous phases, the concentration of the disperse phase, the size and shape of the disperse phase, and the overall thickness of the film. In general, elliptical diffusers have a relatively small difference in index of refraction between the particles of the disperse and continuous phases. By using a birefringent polymer-based diffuser, highly elliptical polarization sensitivity (i.e., diffuse reflectivity depending on the polarization of light) can be achieved. At an extreme, where the index of refraction of the polymers match on one axis, the elliptical polarizer will be a diffuse reflecting polarizer.

Methods of Obtaining Index Match/Mismatch

The materials selected for use in a polarizer in accordance with the present invention, and the degree of orientation of these materials, are preferably chosen so that the phases in the finished polarizer have at least one axis for which the associated indices of refraction are substantially equal. The match of refractive indices associated with that axis, which typically, but not necessarily, is an axis

transverse to the direction of orientation, results in substantially no reflection of light in that plane of polarization.

The disperse phase may also exhibit a decrease in the refractive index associated with the direction of orientation after stretching. If the birefringence of the host is positive, a negative strain induced birefringence of the disperse phase has the advantage of increasing the difference between indices of refraction of the adjoining phases associated with the orientation axis while the reflection of light with its plane of polarization perpendicular to the orientation direction is still negligible. Differences between the indices of refraction of adjoining phases in the direction orthogonal to the orientation direction should be less than about 0.05 after orientation, and preferably, less than about 0.02.

The disperse phase may also exhibit a positive strain induced birefringence. However, this can be altered by means of heat treatment to match the refractive index of the axis perpendicular to the orientation direction of the continuous phase. The temperature of the heat treatment should not be so high as to relax the birefringence in the continuous phase.

Size of Disperse Phase

The size of the disperse phase also can have a significant effect on scattering. If the disperse phase particles are too small (i.e., less than about 1/30 the wavelength of light in the medium of interest) and if there are many particles per cubic wavelength, the optical body behaves as a medium with an effective index of refraction somewhat between the indices of the two phases along any given axis. In such a case, very little light is scattered. If the particles are too large, the light is specularly reflected from the surface of the particle, with very little diffusion into other directions. When the particles are too large in at least two orthogonal directions, undesirable iridescence effects can also occur. Practical limits may also be reached when particles become large in that the thickness of the optical body becomes greater and desirable mechanical properties are compromised.

The dimensions of the particles of the disperse phase after alignment can vary depending on the desired use of the optical material. Thus, for example, the dimensions of the particles may vary depending on the wavelength of electromagnetic radiation that is of interest in a particular application, with different dimensions required for reflecting or transmitting visible, ultraviolet, infrared, and microwave radiation. Generally, however, the length of the particles should be such that they are approximately greater than the wavelength of electromagnetic radiation of interest in the medium, divided by 30.

Preferably, in applications where the optical body is to be used as a low loss reflective polarizer, the particles will have a length that is greater than about 2 times the wavelength of the electromagnetic radiation over the wavelength range of interest, and preferably over 4 times the wavelength. The average diameter of the particles is preferably equal or less than the wavelength of the electromagnetic radiation over the wavelength range of interest, and preferably less than 0.5 of the desired wavelength. While the dimensions of the disperse phase are a secondary consideration in most applications, they become of greater importance in thin film applications, where there is comparatively little diffuse reflection.

Geometry of Disperse Phase

While the index mismatch is the predominant factor relied upon to promote scattering in the films of the present invention (i.e., a diffuse mirror or polarizer made in accordance with the present invention has a substantial mismatch in the indices of refraction of the continuous and disperse phases along at least one axis), the geometry of the particles of the disperse phase can have a secondary effect on scattering. Thus, the depolarization factors of the particles for the electric field in the index of refraction match and mismatch directions can reduce or enhance the amount of scattering in a given direction. For example, when the disperse phase is elliptical in a cross-section taken along a plane perpendicular to the axis of orientation, the elliptical cross-sectional shape of the disperse phase contributes to the asymmetric diffusion in both back scattered light and forward scattered light. The effect can either add or detract from the amount of scattering from the index

mismatch, but generally has a small influence on scattering in the preferred range of properties in the present invention.

The shape of the disperse phase particles can also influence the degree of diffusion of light scattered from the particles. This shape effect is generally small but increases as the aspect ratio of the geometrical cross-section of the particle in the plane perpendicular to the direction of incidence of the light increases and as the particles get relatively larger. In general, in the operation of this invention, the disperse phase particles should be sized less than several wavelengths of light in one or two mutually orthogonal dimensions if diffuse, rather than specular, reflection is preferred.

Preferably, for a low loss reflective polarizer, the preferred embodiment consists of a disperse phase disposed within the continuous phase as a series of rod-like structures which, as a consequence of orientation, have a high aspect ratio which can enhance reflection for polarizations parallel to the orientation direction by increasing the scattering strength and dispersion for that polarization relative to polarizations perpendicular to the orientation direction. However, as indicated in FIGS. 3a-e, the disperse phase may be provided with many different geometries. Thus, the disperse phase may be disk-shaped or elongated disk-shaped, as in FIGS. 3a-c, rod-shaped, as in FIG. 3d-e, or spherical. Other embodiments are contemplated wherein the disperse phase has cross sections which are approximately elliptical (including circular), polygonal, irregular, or a combination of one or more of these shapes. The cross-sectional shape and size of the particles of the disperse phase may also vary from one particle to another, or from one region of the film to another (i.e., from the surface to the core).

In some embodiments, the disperse phase may have a core and shell construction, wherein the core and shell are made out of the same or different materials, or wherein the core is hollow. Thus, for example, the disperse phase may consist of hollow fibers of equal or random lengths, and of uniform or non-uniform cross section. The interior space of the fibers may be empty, or may be occupied by a suitable medium which may be a solid, liquid, or gas, and may be organic or inorganic. The refractive index of the medium may be chosen in

consideration of the refractive indices of the disperse phase and the continuous phase so as to achieve a desired optical effect (i.e., reflection or polarization along a given axis).

The geometry of the disperse phase may be arrived at through suitable orientation or processing of the optical material, through the use of particles having a particular geometry, or through a combination of the two. Thus, for example, a disperse phase having a substantially rod-like structure can be produced by orienting a film consisting of approximately spherical disperse phase particles along a single axis. The rod-like structures can be given an elliptical cross-section by orienting the film in a second direction perpendicular to the first. As a further example, a disperse phase having a substantially rod-like structure in which the rods are rectangular in cross-section can be produced by orienting in a single direction a film having a disperse phase consisting of a series of essentially rectangular flakes.

Stretching is one convenient manner for arriving at a desired geometry, since stretching can also be used to induce a difference in indices of refraction within the material. As indicated above, the orientation of films in accordance with the invention may be in more than one direction, and may be sequential or simultaneous.

In another example, the components of the continuous and disperse phases may be extruded such that the disperse phase is rod-like in one axis in the unoriented film. Rods with a high aspect ratio may be generated by orienting in the direction of the major axis of the rods in the extruded film. Plate-like structures may be generated by orienting in an orthogonal direction to the major axis of the rods in the extruded film.

The structure in FIG. 2 can be produced by asymmetric biaxial orientation of a blend of essentially spherical particles within a continuous matrix. Alternatively, the structure may be obtained by incorporating a plurality of fibrous structures into the matrix material, aligning the structures along a single axis, and orienting the mixture in a direction transverse to that axis. Still another method for obtaining this structure is by controlling the relative viscosities, shear, or surface

tension of the components of a polymer blend so as to give rise to a fibrous disperse phase when the blend is extruded into a film. In general, it is found that the best results are obtained when the shear is applied in the direction of extrusion.

Dimensional Alignment of Disperse Phase

Dimensional alignment is also found to have an effect on the scattering behavior of the disperse phase. In particular, it has been observed in optical bodies made in accordance with the present invention that aligned scatterers will not scatter light symmetrically about the directions of specular transmission or reflection as randomly aligned scatterers would. In particular, inclusions that have been elongated through orientation to resemble rods scatter light primarily along (or near) the surface of a cone centered on the orientation direction and along the specularly transmitted direction. This may result in an anisotropic distribution of scattered light about the specular reflection and specular transmission directions. For example, for light incident on such an elongated rod in a direction perpendicular to the orientation direction, the scattered light appears as a band of light in the plane perpendicular to the orientation direction with an intensity that decreases with increasing angle away from the specular directions. By tailoring the geometry of the inclusions, some control over the distribution of scattered light can be achieved both in the transmissive hemisphere and in the reflective hemisphere.

Dimensions of Disperse Phase

In applications where the optical body is to be used as a low loss reflective polarizer, the structures of the disperse phase preferably have a high aspect ratio, i.e., the structures are substantially larger in one dimension than in any other dimension. The aspect ratio is preferably at least 2, and more preferably at least 5. The largest dimension (i.e., the length) is preferably at least 2 times the wavelength of the electromagnetic radiation over the wavelength range of interest, and more preferably at least 4 times the desired wavelength. On the other hand, the smaller (i.e., cross-sectional) dimensions of the structures of the disperse phase are

preferably less than or equal to the wavelength of interest, and more preferably less than 0.5 times the wavelength of interest.

Volume Fraction of Disperse Phase

The volume fraction of the disperse phase also affects the scattering of light in the optical bodies of the present invention. Within certain limits, increasing the volume fraction of the disperse phase tends to increase the amount of scattering that a light ray experiences after entering the body for both the match and mismatch directions of polarized light. This factor is important for controlling the reflection and transmission properties for a given application.

The desired volume fraction of the disperse phase will depend on many factors, including the specific choice of materials for the continuous and disperse phase. However, the volume fraction of the disperse phase will typically be at least about 1% by volume relative to the continuous phase, more preferably within the range of about 5 to about 15%, and most preferably within the range of about 15 to about 30%.

Co-Continuous Phases

When the volume fraction for binary blends of high polymers of roughly equivalent viscosity approaches 50%, the distinction between the disperse and continuous phases becomes difficult, as each phase becomes continuous in space. Depending upon the materials of choice, there may also be regions where the first phase appears to be dispersed within the second, and vice versa. For a description of a variety of co-continuous morphologies and for methods of evaluating, analyzing, and characterizing them, see Sperling and the references cited therein (L.H. Sperling, "Microphase Structure", Encyclopedia of Polymer Science and Engineering, 2nd Ed., Vol. 9, 760-788, and L.H. Sperling, Chapter 1 "Interpenetrating Polymer Networks: An Overview", Interpenetrating Polymer Networks, edited by D. Klempner, L.H. Sperling, and L.A. Utracki, Advances in Chemistry Series #239, 3-38, 1994).

Materials having co-continuous phases may be made in accordance with the present invention by a number of different methods. Thus, for example, the polymeric first phase material may be mechanically blended with the polymeric second phase material to achieve a co-continuous system. Examples of co-continuous morphologies achieved by blending are described, for example, in D. Bourry and B.D. Favis, "Co-Continuity and Phase Inversion in HDPE/PS Blends: The Role of Interfacial Modification", 1995 Annual Technical Conference of the Society of Plastics Engineers ANTEC, Vol. 53, No. 2, 2001-2009 (polystyrene/polyethylene blends), and in A. Leclair and B.D. Favis, "The role of interfacial contact in immiscible binary polymer blends and its influence on mechanical properties", Polymer, Vol. 37, No. 21, 4723-4728, 1996 (polycarbonate/polyethylene blends).

Co-continuous phases may also be formed in accordance with the present invention by first by dissolving them out of supercritical fluid extractions, such as that disclosed for blends of polystyrene and poly(methyl methacrylate) in U.S. 4,281,084, and then allowing them to phase separate following exposure to heat and/or mechanical shear, as described by in N. Mekhilef, B.D. Favis and P.J. Carreau, "Morphological Stability of Polystyrene Polyethylene Blends", 1995 Annual Technical Conference of the Society of Plastics Engineers ANTEC, Vol. 53, No. 2, 1572-1579).

A further method of producing co-continuous phases in accordance with the present invention is through the creation of interpenetrating polymer networks (IPNs). Some of the more important IPNs include simultaneous IPNs, sequential IPNs, gradient IPNs, latex IPNs, thermoplastic IPNs, and semi-IPNs. These and other types of IPNs, their physical properties (e.g., phase diagrams), and methods for their preparation and characterization, are described, for example, in L.H. Sperling and V. Mishra, "Current Status of Interpenetrating Polymer Networks", Polymers for Advanced Technologies, Vol. 7, No. 4, 197-208, April 1996, and in L.H. Sperling, "Interpenetrating Polymer Networks: An Overview", Interpenetrating Polymer Networks, edited by D. Klempner, L.H. Sperling, and

L.A. Utracki, Advances in Chemistry Series #239, 3-38, 1994). Some of the major methods for preparing these systems are summarized below.

Simultaneous IPNs may be made by mixing together the respective monomers or prepolymers, plus the crosslinkers and activators, of two or more polymer networks. The respective monomers or prepolymers are then reacted simultaneously, but in a non-interfering manner. Thus, for example, one reaction may be made to proceed by way of chain polymerization kinetics, and the other reaction may be made to proceed through step polymerization kinetics.

Sequential IPNs are made by first forming an initial polymer network. Then, the monomers, crosslinkers, and activators of one or more additional networks are swollen into the initial polymer network, where they are reacted in situ to yield additional polymer networks.

Gradient IPNs are synthesized in such a manner that the overall composition or crosslink density of the IPN varies macroscopically in the material from one location to another. Such systems may be made, for example, by forming a first polymer network predominantly on one surface of a film and a second polymer network predominantly on another surface of the film, with a gradient in composition throughout the interior of the film.

Latex IPNs are made in the form of latexes (e.g., with a core and shell structure). In some variations, two or more latexes may be mixed and formed into a film, which crosslinks the polymers.

Thermoplastic IPNs are hybrids between polymer blends and IPNs that involve physical crosslinks instead of chemical crosslinks. As a result, these materials can be made to flow at elevated temperatures in a manner similar to that of thermoplastic elastomers, but are crosslinked and behave as IPNs at the temperatures of normal use.

Semi-IPNs are compositions of two or more polymers in which one or more of the polymers are crosslinked and one or more of the polymers are linear or branched.

As indicated above, co-continuity can be achieved in multicomponent systems as well as in binary systems. For example, three or more materials may be

used in combination to give desired optical properties (e.g., transmission and reflectivity) and/or improved physical properties. All components may be immiscible, or two or more components may demonstrate miscibility. A number of ternary systems exhibiting co-continuity are described, for example, in L.H. Sperling, Chapter 1 "Interpenetrating Polymer Networks: An Overview", Interpenetrating Polymer Networks, edited by D. Klempner, L.H. Sperling, and L.A. Utracki, Advances in Chemistry Series #239, 3-38, 1994).

Characteristic sizes of the phase structures, ranges of volume fraction over which co-continuity may be observed, and stability of the morphology may all be influenced by additives, such as compatibilizers, graft or block copolymers, or reactive components, such as maleic anhydride or glycidyl methacrylate. Such effects are described, for example, for blends of polystyrene and poly(ethylene terephthalate) in H.Y. Tsai and K. Min, "Reactive Blends of Functionalized Polystyrene and Polyethylene Terephthalate", 1995 Annual Technical Conference of the Society of Plastics Engineers ANTEC, Vol. 53, No. 2, 1858-1865. However, for particular systems, phase diagrams may be constructed through routine experimentation and used to produce co-continuous systems in accordance with the present invention.

The microscopic structure of co-continuous systems made in accordance with the present invention can vary significantly, depending on the method of preparation, the miscibility of the phases, the presence of additives, and other factors as are known to the art. Thus, for example, one or more of the phases in the co-continuous system may be fibrillar, with the fibers either randomly oriented or oriented along a common axis. Other co-continuous systems may comprise an open-celled matrix of a first phase, with a second phase disposed in a co-continuous manner within the cells of the matrix. The phases in these systems may be co-continuous along a single axis, along two axes, or along three axes.

Optical bodies made in accordance with the present invention and having co-continuous phases (particularly IPNs) will, in several instances, have properties that are advantageous over the properties of similar optical bodies that are made with only a single continuous phase, depending, of course, on the properties of the

individual polymers and the method by which they are combined. Thus, for example, the co-continuous systems of the present invention allow for the chemical and physical combination of structurally dissimilar polymers, thereby providing a convenient route by which the properties of the optical body may be modified to meet specific needs. Furthermore, co-continuous systems will frequently be easier to process, and may impart such properties as weatherability, reduced flammability, greater impact resistance and tensile strength, improved flexibility, and superior chemical resistance. IPNs are particularly advantageous in certain applications, since they typically swell (but do not dissolve) in solvents, and exhibit suppressed creep and flow compared to analogous non-IPN systems (see, e.g., D. Klempner and L. Berkowski, "Interpenetrating Polymer Networks", Encyclopedia of Polymer Science and Engineering, 2nd Ed., Vol. 9, 489-492.

One skilled in the art will appreciate that the principles of co-continuous systems as are known to the art may be applied in light of the teachings set forth herein to produce co-continuous morphologies having unique optical properties. Thus, for example, the refractive indices of known co-continuous morphologies may be manipulated as taught herein to produce new optical films in accordance with the present invention. Likewise, the principles taught herein may be applied to known optical systems to produce co-continuous morphologies.

Thickness of Optical Body

The thickness of the optical body is also an important parameter which can be manipulated to affect reflection and transmission properties in the present invention. As the thickness of the optical body increases, diffuse reflection also increases, and transmission, both specular and diffuse, decreases. Thus, while the thickness of the optical body will typically be chosen to achieve a desired degree of mechanical strength in the finished product, it can also be used to directly to control reflection and transmission properties.

Thickness can also be utilized to make final adjustments in reflection and transmission properties of the optical body. Thus, for example, in film applications, the device used to extrude the film can be controlled by a downstream

optical device which measures transmission and reflection values in the extruded film, and which varies the thickness of the film (i.e., by adjusting extrusion rates or changing casting wheel speeds) so as to maintain the reflection and transmission values within a predetermined range.

Materials for Continuous/Disperse Phases

Many different materials may be used as the continuous or disperse phases in the optical bodies of the present invention, depending on the specific application to which the optical body is directed. Such materials include inorganic materials such as silica-based polymers, organic materials such as liquid crystals, and polymeric materials, including monomers, copolymers, grafted polymers, and mixtures or blends thereof. The exact choice of materials for a given application will be driven by the desired match and mismatch obtainable in the refractive indices of the continuous and disperse phases along a particular axis, as well as the desired physical properties in the resulting product. However, the materials of the continuous phase will generally be characterized by being substantially transparent in the region of the spectrum desired.

A further consideration in the choice of materials is that the resulting product must contain at least two distinct phases. This may be accomplished by casting the optical material from two or more materials which are immiscible with each other. Alternatively, if it is desired to make an optical material with a first and second material which are not immiscible with each other, and if the first material has a higher melting point than the second material, in some cases it may be possible to embed particles of appropriate dimensions of the first material within a molten matrix of the second material at a temperature below the melting point of the first material. The resulting mixture can then be cast into a film, with or without subsequent orientation, to produce an optical device.

Suitable polymeric materials for use as the continuous or disperse phase in the present invention may be amorphous, semicrystalline, or crystalline polymeric materials, including materials made from monomers based on carboxylic acids such as isophthalic, azelaic, adipic, sebacic, dibenzoic, terephthalic, 2,7-

naphthalene dicarboxylic, 2,6-naphthalene dicarboxylic, cyclohexanedicarboxylic, and bibenzoic acids (including 4,4'-bibenzoic acid), or materials made from the corresponding esters of the aforementioned acids (i.e., dimethylterephthalate). Of these, 2,6-polyethylene naphthalate (PEN) is especially preferred because of its strain induced birefringence, and because of its ability to remain permanently birefringent after stretching. PEN has a refractive index for polarized incident light of 550 nm wavelength which increases after stretching when the plane of polarization is parallel to the axis of stretch from about 1.64 to as high as about 1.9, while the refractive index decreases for light polarized perpendicular to the axis of stretch. PEN exhibits a birefringence (in this case, the difference between the index of refraction along the stretch direction and the index perpendicular to the stretch direction) of 0.25 to 0.40 in the visible spectrum. The birefringence can be increased by increasing the molecular orientation. PEN may be substantially heat stable from about 155°C up to about 230°C, depending upon the processing conditions utilized during the manufacture of the film.

Polybutylene naphthalate is also a suitable material as well as other crystalline naphthalene dicarboxylic polyesters. The crystalline naphthalene dicarboxylic polyesters exhibit a difference in refractive indices associated with different in-plane axes of at least 0.05 and preferably above 0.20.

When PEN is used as one phase in the optical material of the present invention, the other phase is preferably polymethylmethacrylate (PMMA) or a syndiotactic vinyl aromatic polymer such as polystyrene (sPS). Other preferred polymers for use with PEN are based on terephthalic, isophthalic, sebacic, azelaic or cyclohexanedicarboxylic acid or the related alkyl esters of these materials. Naphthalene dicarboxylic acid may also be employed in minor amounts to improve adhesion between the phases. The diol component may be ethylene glycol or a related diol. Preferably, the index of refraction of the selected polymer is less than about 1.65, and more preferably, less than about 1.55, although a similar result may be obtainable by using a polymer having a higher index of refraction if the same index difference is achieved.

Syndiotactic-vinyl aromatic polymers useful in the current invention include poly(styrene), poly(alkyl styrene), poly(styrene halide), poly(alkyl styrene), poly(vinyl ester benzoate), and these hydrogenated polymers and mixtures, or copolymers containing these structural units. Examples of poly(alkyl styrenes) include: poly(methyl styrene), poly(ethyl styrene), poly(propyl styrene), poly(butyl styrene), poly(phenyl styrene), poly(vinyl naphthalene), poly(vinylstyrene), and poly(acenaphthalene) may be mentioned. As for the poly(styrene halides), examples include: poly(chlorostyrene), poly(bromostyrene), and poly(fluorostyrene). Examples of poly(alkoxy styrene) include: poly(methoxy styrene), and poly(ethoxy styrene). Among these examples, as particularly preferable styrene group polymers, are: polystyrene, poly(p-methyl styrene), poly(m-methyl styrene), poly(p-tertiary butyl styrene), poly(p-chlorostyrene), poly(m-chloro styrene), poly(p-fluoro styrene), and copolymers of styrene and p-methyl styrene may be mentioned.

Furthermore, as comonomers of syndiotactic vinyl-aromatic group copolymers, besides monomers of above explained styrene group polymer, olefin monomers such as ethylene, propylene, butene, hexene, or octene; diene monomers such as butadiene, isoprene; polar vinyl monomers such as cyclic diene monomer, methyl methacrylate, maleic acid anhydride, or acrylonitrile may be mentioned.

The syndiotactic-vinyl aromatic polymers of the present invention may be block copolymers, random copolymers, or alternating copolymers.

The vinyl aromatic polymer having high level syndiotactic structure referred to in this invention generally includes polystyrene having syndiotacticity of higher than 75% or more, as determined by carbon-13 nuclear magnetic resonance. Preferably, the degree of syndiotacticity is higher than 85% racemic diad, or higher than 30%, or more preferably, higher than 50%, racemic pentad.

In addition, although there are no particular restrictions regarding the molecular weight of this syndiotactic-vinyl aromatic group polymer, preferably, the weight average molecular weight is greater than 10,000 and less than 1,000,000, and more preferably, greater than 50,000 and less than 800,000.

As for said other resins, various types may be mentioned, including, for instance, vinyl aromatic group polymers with atactic structures, vinyl aromatic group polymers with isotactic structures, and all polymers that are miscible. For example, polyphenylene ethers show good miscibility with the previous explained vinyl aromatic group polymers. Furthermore, the composition of these miscible resin components is preferably between 70 to 1 weight %, or more preferably, 50 to 2 weight %. When composition of miscible resin component exceeds 70 weight %, degradation on the heat resistance may occur, and is usually not desirable.

It is not required that the selected polymer for a particular phase be a copolyester or copolycarbonate. Vinyl polymers and copolymers made from monomers such as vinyl naphthalenes, styrenes, ethylene, maleic anhydride, acrylates, and methacrylates may also be employed. Condensation polymers, other than polyesters and polycarbonates, can also be utilized. Suitable condensation polymers include polysulfones, polyamides, polyurethanes, polyamic acids, and polyimides. Naphthalene groups and halogens such as chlorine, bromine and iodine are useful in increasing the refractive index of the selected polymer to the desired level (1.59 to 1.69) if needed to substantially match the refractive index if PEN is the host. Acrylate groups and fluorine are particularly useful in decreasing the refractive index.

Minor amounts of comonomers may be substituted into the naphthalene dicarboxylic acid polyester so long as the large refractive index difference in the orientation direction(s) is not substantially compromised. A smaller index difference (and therefore decreased reflectivity) may be counterbalanced by advantages in any of the following: improved adhesion between the continuous and disperse phase, lowered temperature of extrusion, and better match of melt viscosities.

Region of Spectrum

While the present invention is frequently described herein with reference to the visible region of the spectrum, various embodiments of the present invention

can be used to operate at different wavelengths (and thus frequencies) of electromagnetic radiation through appropriate scaling of the components of the optical body. Thus, as the wavelength increases, the linear size of the components of the optical body may be increased so that the dimensions of these components, measured in units of wavelength, remain approximately constant.

Of course, one major effect of changing wavelength is that, for most materials of interest, the index of refraction and the absorption coefficient change. However, the principles of index match and mismatch still apply at each wavelength of interest, and may be utilized in the selection of materials for an optical device that will operate over a specific region of the spectrum. Thus, for example, proper scaling of dimensions will allow operation in the infrared, near-ultraviolet, and ultra-violet regions of the spectrum. In these cases, the indices of refraction refer to the values at these wavelengths of operation, and the body thickness and size of the disperse phase scattering components should also be approximately scaled with wavelength. Even more of the electromagnetic spectrum can be used, including very high, ultrahigh, microwave and millimeter wave frequencies. Polarizing and diffusing effects will be present with proper scaling to wavelength and the indices of refraction can be obtained from the square root of the dielectric function (including real and imaginary parts). Useful products in these longer wavelength bands can be diffuse reflective polarizers and partial polarizers.

In some embodiments of the present invention, the optical properties of the optical body vary across the wavelength band of interest. In these embodiments, materials may be utilized for the continuous and/or disperse phases whose indices of refraction, along one or more axes, varies from one wavelength region to another. The choice of continuous and disperse phase materials, and the optical properties (i.e., diffuse and disperse reflection or specular transmission) resulting from a specific choice of materials, will depend on the wavelength band of interest.

Skin Layers

A layer of material which is substantially free of a disperse phase may be coextensively disposed on one or both major surfaces of the film, i.e., the extruded blend of the disperse phase and the continuous phase. The composition of the layer, also called a skin layer, may be chosen, for example, to protect the integrity of the disperse phase within the extruded blend, to add mechanical or physical properties to the final film or to add optical functionality to the final film. Suitable materials of choice may include the material of the continuous phase or the material of the disperse phase. Other materials with a melt viscosity similar to the extruded blend may also be useful.

A skin layer or layers may reduce the wide range of shear intensities the extruded blend might experience within the extrusion process, particularly at the die. A high shear environment may cause undesirable surface voiding and may result in a textured surface. A broad range of shear values throughout the thickness of the film may also prevent the disperse phase from forming the desired particle size in the blend.

A skin layer or layers may also add physical strength to the resulting composite or reduce problems during processing, such as, for example, reducing the tendency for the film to split during the orientation process. Skin layer materials which remain amorphous may tend to make films with a higher toughness, while skin layer materials which are semicrystalline may tend to make films with a higher tensile modulus. Other functional components such as antistatic additives, UV absorbers, dyes, antioxidants, and pigments, may be added to the skin layer, provided they do not substantially interfere with the desired optical properties of the resulting product.

Skin layers or coatings may also be added to impart desired barrier properties to the resulting film or device. Thus, for example, barrier films or coatings may be added as skin layers, or as a component in skin layers, to alter the transmissive properties of the film or device towards liquids, such as water or organic solvents, or gases, such as oxygen or carbon dioxide.

Skin layers or coatings may also be added to impart or improve abrasion resistance in the resulting article. Thus, for example, a skin layer comprising particles of silica embedded in a polymer matrix may be added to an optical film produced in accordance with the invention to impart abrasion resistance to the film, provided, of course, that such a layer does not unduly compromise the optical properties required for the application to which the film is directed.

Skin layers or coatings may also be added to impart or improve puncture and/or tear resistance in the resulting article. Thus, for example, in embodiments in which the outer layer of the optical film contains coPEN as the major phase, a skin layer of monolithic coPEN may be coextruded with the optical layers to impart good tear resistance to the resulting film. Factors to be considered in selecting a material for a tear resistant layer include percent elongation to break, Young's modulus, tear strength, adhesion to interior layers, percent transmittance and absorbance in an electromagnetic bandwidth of interest, optical clarity or haze, refractive indices as a function of frequency, texture and roughness, melt thermal stability, molecular weight distribution, melt rheology and coextrudability, miscibility and rate of inter-diffusion between materials in the skin and optical layers, viscoelastic response, relaxation and crystallization behavior under draw conditions, thermal stability at use temperatures, weatherability, ability to adhere to coatings and permeability to various gases and solvents. Puncture or tear resistant skin layers may be applied during the manufacturing process or later coated onto or laminated to the optical film. Adhering these layers to the optical film during the manufacturing process, such as by a coextrusion process, provides the advantage that the optical film is protected during the manufacturing process. In some embodiments, one or more puncture or tear resistant layers may be provided within the optical film, either alone or in combination with a puncture or tear resistant skin layer.

The skin layers may be applied to one or two sides of the extruded blend at some point during the extrusion process, i.e., before the extruded blend and skin layer(s) exit the extrusion die. This may be accomplished using conventional coextrusion technology, which may include using a three-layer coextrusion die.

Lamination of skin layer(s) to a previously formed film of an extruded blend is also possible. Total skin layer thicknesses may range from about 2% to about 50% of the total blend/skin layer thickness.

In some applications, additional layers may be coextruded or adhered on the outside of the skin layers during manufacture of the optical films. Such additional layers may also be extruded or coated onto the optical film in a separate coating operation, or may be laminated to the optical film as a separate film, foil, or rigid or semi-rigid substrate such as polyester (PET), acrylic (PMMA), polycarbonate, metal, or glass.

A wide range of polymers are suitable for skin layers. Of the predominantly amorphous polymers, suitable examples include copolyesters based on one or more of terephthalic acid, 2,6-naphthalene dicarboxylic acid, isophthalic acid phthalic acid, or their alkyl ester counterparts, and alkylene diols, such as ethylene glycol. Examples of semicrystalline polymers suitable for use in skin layers include 2,6-polyethylene naphthalate, polyethylene terephthalate, and nylon materials. Skin layers that may be used to increase the toughness of the optical film include high elongation polyesters such as Ecdel™ and PCTG 5445 (available commercially from Eastman Chemical Co., Rochester, NY.) and polycarbonates. Polyolefins, such as polypropylene and polyethylene, may also be used for this purpose, especially if they are made to adhere to the optical film with a compatibilizer.

Functional layers

Various functional layers or coatings may be added to the optical films and devices of the present invention to alter or improve their physical or chemical properties, particularly along the surface of the film or device. Such layers or coatings may include, for example, slip agents, low adhesion backside materials, conductive layers, antistatic coatings or films, barrier layers, flame retardants, UV stabilizers, abrasion resistant materials, optical coatings, or substrates designed to improve the mechanical integrity or strength of the film or device.

The films and optical devices of the present invention may be given good slip properties by treating them with low friction coatings or slip agents, such as polymer beads coated onto the surface. Alternately, the morphology of the surfaces of these materials may be modified, as through manipulation of extrusion conditions, to impart a slippery surface to the film; methods by which surface morphology may be so modified are described in U.S. Serial Number 08/612,710.

In some applications, as where the optical films of the present invention are to be used as a component in adhesive tapes, it may be desirable to treat the films with low adhesion backsize (LAB) coatings or films such as those based on urethane, silicone or fluorocarbon chemistry. Films treated in this manner will exhibit proper release properties towards pressure sensitive adhesives (PSAs), thereby enabling them to be treated with adhesive and wound into rolls. Adhesive tapes made in this manner can be used for decorative purposes or in any application where a diffusely reflective or transmissive surface on the tape is desirable.

The films and optical devices of the present invention may also be provided with one or more conductive layers. Such conductive layers may comprise metals such as silver, gold, copper, aluminum, chromium, nickel, tin, and titanium, metal alloys such as silver alloys, stainless steel, and inconel, and semiconductor metal oxides such as doped and undoped tin oxides, zinc oxide, and indium tin oxide (ITO).

The films and optical devices of the present invention may also be provided with antistatic coatings or films. Such coatings or films include, for example, V_2O_5 and salts of sulfonic acid polymers, carbon or other conductive metal layers.

The optical films and devices of the present invention may also be provided with one or more barrier films or coatings that alter the transmissive properties of the optical film towards certain liquids or gases. Thus, for example, the devices and films of the present invention may be provided with films or coatings that inhibit the transmission of water vapor, organic solvents, O_2, or CO_2 through the film. Barrier coatings will be particularly desirable in high humidity environments,

where components of the film or device would be subject to distortion due to moisture permeation.

The optical films and devices of the present invention may also be treated with flame retardants, particularly when used in environments, such as on airplanes, that are subject to strict fire codes. Suitable flame retardants include aluminum trihydrate, antimony trioxide, antimony pentoxide, and flame retarding organophosphate compounds.

The optical films and devices of the present invention may also be provided with abrasion-resistant or hard coatings, which will frequently be applied as a skin layer. These include acrylic hardcoats such as Acryloid A-11 and Paraloid K-120N, available from Rohm & Haas, Philadelphia, PA; urethane acrylates, such as those described in U.S. Pat. No. 4,249,011 and those available from Sartomer Corp., Westchester, PA; and urethane hardcoats obtained from the reaction of an aliphatic polyisocyanate (e.g., Desmodur N-3300, available from Miles, Inc., Pittsburgh, PA) with a polyester (e.g., Tone Polyol 0305, available from Union Carbide, Houston, TX).

The optical films and devices of the present invention may further be laminated to rigid or semi-rigid substrates, such as, for example, glass, metal, acrylic, polyester, and other polymer backings to provide structural rigidity, weatherability, or easier handling. For example, the optical films of the present invention may be laminated to a thin acrylic or metal backing so that it can be stamped or otherwise formed and maintained in a desired shape. For some applications, such as when the optical film is applied to other breakable backings, an additional layer comprising PET film or puncture-tear resistant film may be used.

The optical films and devices of the present invention may also be provided with shatter resistant films and coatings. Films and coatings suitable for this purpose are described, for example, in publications EP 592284 and EP 591055, and are available commercially from 3M Company, St. Paul, MN.

Various optical layers, materials, and devices may also be applied to, or used in conjunction with, the films and devices of the present invention for specific

applications. These include, but are not limited to, magnetic or magneto-optic coatings or films; liquid crystal panels, such as those used in display panels and privacy windows; photographic emulsions; fabrics; prismatic films, such as linear Fresnel lenses; brightness enhancement films; holographic films or images; embossable films; anti-tamper films or coatings; IR transparent film for low emissivity applications; release films or release coated paper; and polarizers or mirrors.

Multiple additional layers on one or both major surfaces of the optical film are contemplated, and can be any combination of aforementioned coatings or films. For example, when an adhesive is applied to the optical film, the adhesive may contain a white pigment such as titanium dioxide to increase the overall reflectivity, or it may be optically transparent to allow the reflectivity of the substrate to add to the reflectivity of the optical film.

In order to improve roll formation and convertibility of the film, the optical films of the present invention may also comprise a slip agent that is incorporated into the film or added as a separate coating. In most applications, slip agents will be added to only one side of the film, ideally the side facing the rigid substrate in order to minimize haze.

Microvoiding

In some embodiments, the materials of the continuous and disperse phases may be chosen so that the interface between the two phases will be sufficiently weak to result in voiding when the film is oriented. The average dimensions of the voids may be controlled through careful manipulation of processing parameters and stretch ratios, or through selective use of compatibilizers. The voids may be back-filled in the finished product with a liquid, gas, or solid. Voiding may be used in conjunction with the aspect ratios and refractive indices of the disperse and continuous phases to produce desirable optical properties in the resulting film.

More Than Two Phases

The optical bodies made in accordance with the present invention may also consist of more than two phases. Thus, for example, an optical material made in accordance with the present invention can consist of two different disperse phases within the continuous phase. The second disperse phase could be randomly or non-randomly dispersed throughout the continuous phase, and can be randomly aligned or aligned along a common axis.

Optical bodies made in accordance with the present invention may also consist of more than one continuous phase. Thus, in some embodiments, the optical body may include, in addition to a first continuous phase and a disperse phase, a second phase which is co-continuous in at least one dimension with the first continuous phase. In one particular embodiment, the second continuous phase is a porous, sponge-like material which is coextensive with the first continuous phase (i.e., the first continuous phase extends through a network of channels or spaces extending through the second continuous phase, much as water extends through a network of channels in a wet sponge). In a related embodiment, the second continuous phase is in the form of a dendritic structure which is coextensive in at least one dimension with the first continuous phase.

Multilayer Combinations

If desired, one or more sheets of a continuous/disperse phase film made in accordance with the present invention may be used in combination with, or as a component in, a multilayered film (i.e., to increase reflectivity). Suitable multilayered films include those of the type described in WO 95/17303 (Ouderkirk et al.). In such a construction, the individual sheets may be laminated or otherwise adhered together or may be spaced apart. If the optical thicknesses of the phases within the sheets are substantially equal (that is, if the two sheets present a substantially equal and large number of scatterers to incident light along a given axis), the composite will reflect, at somewhat greater efficiency, substantially the same band width and spectral range of reflectivity (i.e., "band") as the individual sheets. If the optical thicknesses of phases within the sheets are not substantially

equal, the composite will reflect across a broader band width than the individual phases. A composite combining mirror sheets with polarizer sheets is useful for increasing total reflectance while still polarizing transmitted light. Alternatively, a single sheet may be asymmetrically and biaxially oriented to produce a film having selective reflective and polarizing properties.

FIG. 5 illustrates one example of this embodiment of the present invention. There, the optical body consists of a multilayer film **20** in which the layers alternate between layers of PEN **22** and layers of co-PEN **24**. Each PEN layer includes a disperse phase of syndiotactic polystyrene (sPS) within a matrix of PEN. This type of construction is desirable in that it promotes lower off-angle color. Furthermore, since the layering or inclusion of scatterers averages out light leakage, control over layer thickness is less critical, allowing the film to be more tolerable of variations in processing parameters.

Any of the materials previously noted may be used as any of the layers in this embodiment, or as the continuous or disperse phase within a particular layer. However, PEN and co-PEN are particularly desirable as the major components of adjacent layers, since these materials promote good laminar adhesion.

Also, a number of variations are possible in the arrangement of the layers. Thus, for example, the layers can be made to follow a repeating sequence through part or all of the structure. One example of this is a construction having the layer pattern ... ABCABC ... , wherein A, B, and C are distinct materials or distinct blends or mixtures of the same or different materials, and wherein one or more of A, B, or C contains at least one disperse phase and at least one continuous phase. The skin layers are preferably the same or chemically similar materials.

Antireflection Layers

The films and other optical devices made in accordance with the invention may also include one or more anti-reflective layers or coatings, such as, for example, conventional vacuum coated dielectric metal oxide or metal/metal oxide optical films, silica sol gel coatings, and coated or coextruded antireflective layers such as those derived from low index fluoropolymers such as THV, an extrudable

fluoropolymer available from 3M Company (St. Paul, MN). Such layers or coatings, which may or may not be polarization sensitive, serve to increase transmission and to reduce reflective glare, and may be imparted to the films and optical devices of the present invention through appropriate surface treatment, such as coating or sputter etching. A particular example of an antireflective coating is described in more detail in Examples 132-133.

In some embodiments of the present invention, it is desired to maximize the transmission and/or minimize the specular reflection for certain polarizations of light. In these embodiments, the optical body may comprise two or more layers in which at least one layer comprises an anti-reflection system in close contact with a layer providing the continuous and disperse phases. Such an anti-reflection system acts to reduce the specular reflection of the incident light and to increase the amount of incident light that enters the portion of the body comprising the continuous and disperse layers. Such a function can be accomplished by a variety of means well known in the art. Examples are quarter wave anti-reflection layers, two or more layer anti-reflective stack, graded index layers, and graded density layers. Such anti-reflection functions can also be used on the transmitted light side of the body to increase transmitted light if desired.

Anti-Fog Layers

The films and other optical devices made in accordance with the invention may be provided with a film or coating which imparts anti-fogging properties. In some cases, an anti-reflection layer as described above will serve the dual purpose of imparting both anti-reflection and anti-fogging properties to the film or device. Various anti-fogging agents are known to the art which are suitable for use with the present invention. Typically, however, these materials will substances, such as fatty acid esters, which impart hydrophobic properties to the film surface and which promote the formation of a continuous, less opaque film of water.

Coatings which reduce the tendency for surfaces to "fog" have been reported by several inventors. For example, U.S. Patent No. 3,212,909 to Leigh discloses the use of ammonium soap, such as alkyl ammonium carboxylates in

admixture with a surface active agent which is a sulfated or sulfonated fatty matterial, to produce a anti-fogging composition. U.S. Patent No. 3,075,228 to Elias discloses the use of salts of sulfated alkyl aryloxypolyalkoxy alcohol, as well as alkylbenzene sulfonates, to produce an anti-fogging article useful in cleaning and imparting anti-fogging properties to various surfaces. U.S. Patent No. 3,819,522 to Zmoda, discloses the use of surfactant combinations comprising derivatives of decyne diol as well as surfactant mixtures which include ethoxylated alkyl sulfates in an anti-fogging window cleaner surfactant mixture. Japanese Patent Kokai No. Hei 6[1994]41,335 discloses a clouding and drip preventive composition comprising colloidal alumina, colloidal silica and an anionic surfactant. U.S. Patent No. 4,478,909 (Taniguchi et al) discloses a cured anti-fogging coating film which comprises polyvinyl alcohol, a finely divided silica, and an organic silicon compound, the carbon/silicon weight ratio apparently ebing important to the film's reported anti-fogging properties. Various surfactants, include fluorine-containing surfactants, may be used to improve the surface smoothness of the coating. Other anti-fog coatings incorporating surfactants are described in U.S. Patents 2,803,552; 3,022,178; and 3,897,356. World Patent No. PCT 96/18,691 (Scholtz et al) discloses means by which coatings may impart both anti-fog and anti-reflective properties.

UV Protective Layers

The films and optical devices of the present invention may be protected from UV radiation through the use of UV stabilized films or coatings. Suitable UV stabilized films and coatings include those which incorporate benzotriazoles or hindered amine light stabilizers (HALS) such as Tinuvin™ 292, both of which are available commercially from Ciba Geigy Corp., Hawthorne, NY. Other suitable UV stabilized films and coatings include those which contain benzophenones or diphenyl acrylates, available commercially from BASF Corp., Parsippany, NJ. Such films or coatings will be particularly important when the optical films and devices of the present invention are used in outdoor applications or in luminaires where the source emits significant light in the UV region of the spectrum.

Surface Treatments

The films and other optical devices made in accordance with the present invention may be subjected to various treatments which modify the surfaces of these materials, or any portion thereof, as by rendering them more conducive to subsequent treatments such as coating, dying, metallizing, or lamination. This may be accomplished through treatment with primers, such as PVDC, PMMA, epoxies, and aziridines, or through physical priming treatments such as corona, flame, plasma, flash lamp, sputter-etching, e-beam treatments, or amorphizing the surface layer to remove crystallinity, such as with a hot can.

Lubricants

Various lubricants may be used during the processing (e.g., extrusion) of the films of the present invention. Suitable lubricants for use in the present invention include calcium sterate, zinc sterate, copper sterate, cobalt sterate, molybdenum neodocanoate, and ruthenium (III) acetylacetonate.

Antioxidants

Antioxidants useful in the present invention include 4,4'-thiobis-(6-t-butyl-m-cresol), 2,2'-methylenebis-(4-methyl-6-t-butyl-butylphenol), octadecyl-3,5-di-t-butyl-4-hydroxyhydrocinnamate, bis-(2,4-di-t-butylphenyl) pentaerythritol diphosphite, Irganox™ 1093 (1979)(((3,5-bis(1,1-dimethylethyl)-4-hydroxyphenyl)methyl)-dioctadecyl ester phosphonic acid), Irganox™ 1098 (N,N'-1,6-hexanediylbis(3,5-bis(1,1-dimethyl)-4-hydroxy-benzenepropanamide), Naugaard™ 445 (aryl amine), Irganox™ L 57 (alkylated diphenylamine), Irganox™ L 115 (sulfur containing bisphenol), Irganox™ LO 6 (alkylated phenyl-delta-napthylamine), Ethanox 398 (flourophosphonite), and 2,2'-ethylidenebis(4,6-di-t-butylphenyl)fluorophosnite.

A group of antioxidants that are especially preferred are sterically hindered phenols, including butylated hydroxytoluene (BHT), Vitamin E (di-alpha-tocopherol), Irganox™ 1425WL(calcium bis-(O-ethyl(3,5-di-t-butyl-4-

hydroxybenzyl))phosphonate), Irganox™ 1010 (tetrakis(methylene(3,5,di-t-butyl-4-hydroxyhydrocinnamate))methane), Irganox™ 1076 (octadecyl 3,5-di-tert-butyl-4-hydroxyhydrocinnamate), Ethanox™ 702 (hindered bis phenolic), Etanox 330 (high molecular weight hindered phenolic), and Ethanox™ 703 (hindered phenolic amine).

Dyes, Pigments, Inks, and Imaging Layers

The films and optical devices of the present invention may be treated with inks, dyes, or pigments to alter their appearance or to customize them for specific applications. Thus, for example, the films may be treated with inks or other printed indicia such as those used to display product identification, advertisements, warnings, decoration, or other information. Various techniques can be used to print on the film, such as screenprinting, letterpress, offset, flexographic printing, stipple printing, laser printing, and so forth, and various types of ink can be used, including one and two component inks, oxidatively drying and UV-drying inks, dissolved inks, dispersed inks, and 100% ink systems.

The appearance of the optical film may also be altered by coloring the film, such as by laminating a dyed film to the optical film, applying a pigmented coating to the surface of the optical film, or including a pigment in one or more of the materials (e.g., the continuous or disperse phase) used to make the optical film.

Both visible and near IR dyes and pigments are contemplated in the present invention, and include, for example, optical brighteners such as dyes that absorb in the UV and fluoresce in the visible region of the color spectrum. Other additional layers that may be added to alter the appearance of the optical film include, for example, opacifying (black) layers, diffusing layers, holographic images or holographic diffusers, and metal layers. Each of these may be applied directly to one or both surfaces of the optical film, or may be a component of a second film or foil construction that is laminated to the optical film. Alternately, some components such as opacifying or diffusing agents, or colored pigments, may be included in an adhesive layer which is used to laminate the optical film to another surface.

The films and devices of the present invention may also be provided with metal coatings. Thus, for example, a metallic layer may be applied directly to the optical film by pyrolysis, powder coating, vapor deposition, cathode sputtering, ion plating, and the like. Metal foils or rigid metal plates may also be laminated to the optical film, or separate polymeric films or glass or plastic sheets may be first metallized using the aforementioned techniques and then laminated to the optical films and devices of the present invention.

Dichroic dyes are a particularly useful additive for many of the applications to which the films and optical devices of the present invention are directed, due to their ability to absorb light of a particular polarization when they are molecularly aligned within the material. When used in a film or other material which predominantly scatters only one polarization of light, the dichroic dye causes the material to absorb one polarization of light more than another. Suitable dichroic dyes for use in the present invention include Congo Red (sodium diphenyl-*bis*-α-naphthylamine sulfonate), methylene blue, stilbene dye (Color Index (CI) = 620), and 1,1'-diethyl-2,2'-cyanine chloride (CI = 374 (orange) or CI = 518 (blue)). The properties of these dyes, and methods of making them, are described in E.H. Land, Colloid Chemistry (1946). These dyes have noticeable dichroism in polyvinyl alcohol and a lesser dichroism in cellulose. A slight dichroism is observed with Congo Red in PEN.

Other suitable dyes include the following materials:

(1)

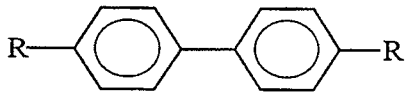

where R is

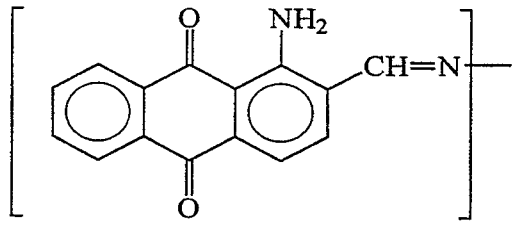

(2)

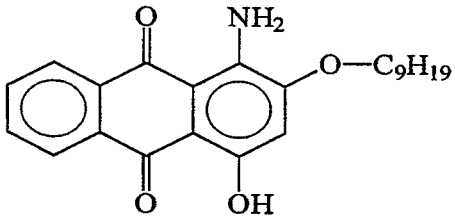

(3)

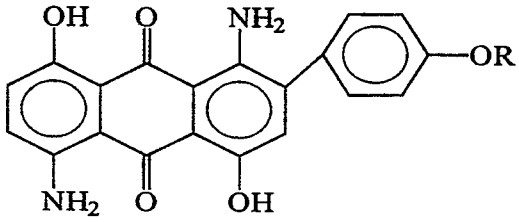

(4)

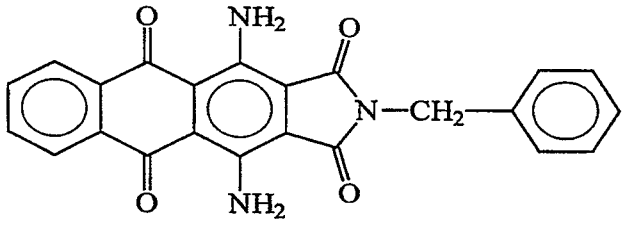

The properties of these dyes, and methods of making them, are discussed in the Kirk Othmer Encyclopedia of Chemical Technology, Vol. 8, pp. 652-661 (4th Ed. 1993), and in the references cited therein.

When a dichroic dye is used in the optical bodies of the present invention, it may be incorporated into either the continuous or disperse phase. However, it is preferred that the dichroic dye is incorporated into the disperse phase.

Dychroic dyes in combination with certain polymer systems exhibit the ability to polarize light to varying degrees. Polyvinyl alcohol and certain dichroic dyes may be used to make films with the ability to polarize light. Other polymers, such as polyethylene terephthalate or polyamides, such as nylon-6, do not exhibit as strong an ability to polarize light when combined with a dichroic dye. The polyvinyl alcohol and dichroic dye combination is said to have a higher dichroism ratio than, for example, the same dye in other film forming polymer systems. A higher dichroism ratio indicates a higher ability to polarize light.

Molecular alignment of a dichroic dye within an optical body made in accordance with the present invention is preferably accomplished by stretching the optical body after the dye has been incorporated into it. However, other methods may also be used to achieve molecular alignment. Thus, in one method, the dichroic dye is crystallized, as through sublimation or by crystallization from solution, into a series of elongated notches that are cut, etched, or otherwise formed in the surface of a film or other optical body, either before or after the optical body has been oriented. The treated surface may then be coated with one or more surface layers, may be incorporated into a polymer matrix or used in a multilayer structure, or may be utilized as a component of another optical body. The notches may be created in accordance with a predetermined pattern or diagram, and with a predetermined amount of spacing between the notches, so as to achieve desirable optical properties.

In a related embodiment, the dichroic dye may be disposed within one or more hollow fibers or other conduits, either before or after the hollow fibers or conduits are disposed within the optical body. The hollow fibers or conduits may be constructed out of a material that is the same or different from the surrounding material of the optical body.

In yet another embodiment, the dichroic dye is disposed along the layer interface of a multilayer construction, as by sublimation onto the surface of a layer before it is incorporated into the multilayer construction. In still other embodiments, the dichroic dye is used to at least partially backfill the voids in a microvoided film made in accordance with the present invention.

Adhesives

Adhesives may be used to laminate the optical films and devices of the present invention to another film, surface, or substrate. Such adhesives include both optically clear and diffuse adhesives, as well as pressure sensitive and non-pressure sensitive adhesives. Pressure sensitive adhesives are normally tacky at room temperature and can be adhered to a surface by application of, at most, light finger pressure, while non-pressure sensitive adhesives include solvent, heat, or radiation activated adhesive systems. Examples of adhesives useful in the present invention include those based on general compositions of polyacrylate; polyvinyl ether; diene-containing rubbers such as natural rubber, polyisoprene, and polyisobutylene; polychloroprene; butyl rubber; butadiene-acrylonitrile polymers; thermoplastic elastomers; block copolymers such as styrene-isoprene and styrene-isoprene-styrene block copolymers, ethylene-propylene-diene polymers, and styrene-butadiene polymers; polyalphaolefins; amorphous polyolefins; silicone; ethylene-containing copolymers such as ethylene vinyl acetate, ethylacrylate, and ethylmethacrylate; polyurethanes; polyamides; polyesters; epoxies; polyvinylpyrrolidone and vinylpyrrolidone copolymers; and mixtures of the above.

Additionally, the adhesives can contain additives such as tackifiers, plasticizers, fillers, antioxidants, stabilizers, pigments, diffusing particles, curatives, and solvents. When a laminating adhesive is used to adhere an optical film of the present invention to another surface, the adhesive composition and thickness are preferably selected so as not to interfere with the optical properties of the optical film. For example, when laminating additional layers to an optical polarizer or mirror wherein a high degree of transmission is desired, the laminating adhesive should be optically clear in the wavelength region that the polarizer or mirror is designed to be transparent in.

Other Additives

In addition to the films, coatings, and additives noted above, the optical materials of the present invention may also comprise other materials or additives as

are known to the art. Such materials include binders, coatings, fillers, compatibilizers, surfactants, antimicrobial agents, foaming agents, reinforcers, heat stabilizers, impact modifiers, plasticizers, viscosity modifiers, and other such materials.

General Applications of Present Invention

The optical bodies of the present invention are particularly useful as diffuse polarizers. However, optical bodies may also be made in accordance with the invention which operate as reflective polarizers or diffuse mirrors. In these applications, the construction of the optical material is similar to that in the diffuser applications described above. However, these reflectors will generally have a much larger difference in the index of refraction along at least one axis. This index difference is typically at least about 0.1, more preferably about 0.15, and most preferably about 0.2.

Reflective polarizers have a refractive index difference along one axis, and substantially matched indices along another. Reflective films, on the other hand, differ in refractive index along at least two in-film plane orthogonal axes. However, the reflective properties of these embodiments need not be attained solely by reliance on refractive index mismatches. Thus, for example, the thickness of the films could be adjusted to attain a desired degree of reflection. In some cases, adjustment of the thickness of the film may cause the film to go from being a transmissive diffuser to a diffuse reflector.

The reflective polarizer of the present invention has many different applications, and is particularly useful in liquid crystal display panels. In addition, the polarizer can be constructed out of PEN or similar materials which are good ultraviolet filters and which absorb ultraviolet light efficiently up to the edge of the visible spectrum. The reflective polarizer can also be used as a thin infrared sheet polarizer.

Fenestrations

The optical films and devices of the present invention are suitable for use in fenestrations, such as skylights or privacy windows, where diffuse transmission of light is desirable and transparency or clarity of the fenestration is either unnecessary or undesirable. In such applications, the optical films of the present invention may be used in conjunction with, or as components in, conventional glazing materials such as plastic or glass. Glazing materials prepared in this manner can be made to be polarization specific, so that the fenestration is essentially transparent to a first polarization of light but substantially reflects a second polarization of light, thereby eliminating or reducing glare. The physical properties of the optical films can also be modified as taught herein so that the glazing materials will reflect light of one or both polarizations within a certain region of the spectrum (e.g., the UV region), while transmitting light of one or both polarizations in another region (e.g., the visible region).

The optical films of the present invention may also be used to provide decorative fenestrations which transmit light of specific wavelengths. Such fenestrations may be used, for example, to impart a specific color or colors to a room (e.g., blue or gold), or may be used to accent the decor thereof, as through the use of wavelength specific lighting panels.

The optical films of the present invention may be incorporated into glazing materials in various manners as are known to the art, as through coating or extrusion. Thus, in one embodiment, the optical films are adhered to all, or a portion, of the outside surface of a glazing material, either by lamination or with the use of an optical adhesive. In another embodiment, the optical films of the present invention are sandwiched between two panes of glass or plastic, and the resulting composite is incorporated into a fenestration. Of course, the optical film may be given any additional layers or coatings (e.g., UV absorbing layers, antifogging layers, or antireflective layers) as are described herein to render it more suitable for the specific application to which it is directed.

Light Fixtures

The optical films of the present invention may be used in various light fixture applications, especially those in which polarized emitted light is preferred. A typical light fixture contains a light source and various other elements which may include a reflective element (typically placed behind the light source), a polarizing element (typically positioned at the output of the light fixture), and a diffusing element that obscures the light source from direct viewing. These elements may be arranged in various configurations within a housing as dictated by aesthetic and/or functional considerations.

The light sources most suitable for use with the optical films of the present invention are diffuse light sources which emit light having a high degree of scatter or randomization with respect to both polarization and direction. Such diffuse sources preferably include a light emitting region and a light reflecting, scattering, and/or depolarizing region. Depending upon the particular application to which the light fixture is directed, the diffuse source may be a fluorescent lamp, an incandescent lamp, a solid-state source or electroluminescent (EL) light source, or a metal halide lamp. The source may also be a randomizing, depolarizing surface used in combination with a point light source, a distant light source, or even solar illumination, the later being transmitted to the diffuse polarizer by free space propagation, a lens system, a light pipe, a polarization preserving light guide, or by other means as are known to the art.

In a fluorescent lamp, such as a hot or cold cathode lamp of the type used in a typical backlit LCD, the light emitting region and the light reflecting, scattering, and depolarizing regions are combined into the phosphors, which serve all of these functions. In the case where a highly collimated beam of light is desired, the reflective polarizing element can be optically configured to image the rejected polarization back onto the light emitting region, which will typically be a filament or arc. The light emitting region may serve both as the light source and the depolarizing region. Alternately, the light source may comprise a light emitting region and a separate randomizing reflector.

As described previously, the optical films of the present invention may be either a diffuse reflecting polarizing film (DRPF), in which light of one plane of polarization is transmitted and light of the other plane of polarization is diffusely reflected, or it may be a diffuse reflecting mirror film (DRMF) in which both planes of polarization are diffusely reflected from the film. As such, the optical film of the present invention may be used in a light fixture as the reflective element and/or the polarizing element. Since the film is diffusely reflective and optically translucent, a separate diffusing element is not necessary and the present optical film can function as both the diffusing element and the polarizing element.

Optical films of the present invention may be used in conventional luminairies that use louvers both to direct the light as well as to obscure the light source from direct view. If films of the present invention are laminated or otherwise juxtaposed to conventionally mirrored louvers, then one polarization of light could be diffusely reflected, whereas the second polarization of light could be directed (e.g., nearly vertically) to minimize glare throughout the illuminated area.

One could envision the use of at least two pieces of optical film of the present invention, where one is rotatable with respect to the other, used in lighting fixtures so that the intensity and/or degree of polarized light could be controlled or tuned for the specific needs of the immediate environment.

For those applications where polarized light is not required, such as in the typical luminaires used for office lighting, the light fixture generally consists of a housing containing a light source, such as a fluorescent bulb, a reflecting element behind the light source, and a diffusing element. The source may be any of the light sources noted above (e.g., a fluorescent lamp). The reflecting element may be any reflective surface, including, for example, a painted white reflector, a metallized film such as Silverlux ™ brand reflective film (available commercially from 3M Company, St. Paul, MN), a reflective metal surface such as polished aluminum, or a reflective multilayered, birefringent mirror film such as that described in WO 95/17303 and WO 96/19374 and incorporated herein by reference. In one embodiment, the DRMF of the present film as herein described may be used as the reflective element in a non-polarized light fixture. The DRMF may additionally be

metallized either by vapor coating or laminating a reflective metal to the back side of the DRMF to improve total reflectivity.

Many applications require polarized light to function properly. Examples of such an applications include optical displays, such as liquid crystal displays (LCDs), which are widely used for lap-top computers, hand-held calculators, digital watches, automobile dashboard displays and the like, and polarized luminaires and task lighting which make use of polarized light to increase contrast and reduce glare. For applications where polarized light is desired, the light fixture generally consists of a housing containing a light source and a polarizing element, and may additionally include a reflecting element and/or a diffusing element. The light source may be any of the light sources described above (e.g., a fluorescent lamp), but is preferably a diffuse light source which emits light having a high degree of scatter or randomization with respect to both polarization and direction. The reflecting element, if present, may be any of the reflective materials described above, or may also be the BRMF of the present invention. The polarizing element may include any polarizer, including absorbing dichroic, thin film dielectric or cholesteric polarizers, but is preferrably the multilayer birefringent reflective polarizer described in WO 95/17303 and WO 96/19347.

Absorptive polarizers typically use dichroic dyes which transmit light of one polarization orientation more strongly than the orthogonal polarization orientation. When an absorptive polarizer is used in a display or polarized light fixture, for example, the absorbed light does not contribute to the illumination, and thus to the overall brightness, of the LCD or luminaire. The use of such polarizers in lighting applications is described in U.S. Pat. Nos. 3,124,639 (Kahn), 3,772,128 (Kahn), and 4,796,160 (Kahn), and in U.S. Pat. Nos. 5,184,881 (Karpen) and 5,359,498 (Karpen). Vacuum deposited, thin film dielectric polarizers are not absorbing, as are dichroic polarizers, but do suffer other disadvantages, such as poor angular response and poor spectral transmission for non-designed wavelengths. In addition, they are conventionally coated onto stable substrates, such as bulk optical glass or polymer substrates, and this may render them too bulky and heavy for use in lighting applications requiring light weight and small

profile. For some lighting applications, these polarizers may be combined with a suitable light source and the DRMF of the present invention to provide a polarized light fixture.

The preferred reflective polarizers specularly transmit light of a desired polarization and reflect light of another polarization. Light produced by a diffuse source is randomly polarized and therefore has polarization components (a) and (b) present. This light is incident on the reflective polarizing element. The reflective polarizing element is adapted to transmit light having a first polarization component (polarization component (a) in this example), and reflect light having the orthogonal polarization component ((b) in this example). Consequently, light of polarization component (a) is transmitted by the reflective polarizing element, while light of polarization component (b) is reflected back into the light fixture where it is randomized. Some of the initially rejected light is thus converted into the desired polarization and is specularly transmitted through the reflective polarizing element. This process continues, and the repeated reflections and subsequent randomization of light of the undesired polarization increases the amount of light of the desired polarization that is emitted from the diffuse polarized light fixture. The result is a very efficient system for producing light of a desired polarization. The repeated reflections and randomizations effected by the combination of the diffuse source and the reflective polarizing element form an efficient mechanism for converting light from state (b) to state (a). The system is efficient in the sense that light which would otherwise have been absorbed, and therefore unavailable, is instead converted to the desired polarization. A light fixture using such a polarizing element thus makes much more efficient use of the light emitted from the source, since light of the rejected polarization is reflected back into the source and randomized. As a result, the total amount of light emitted from the fixture in the desired polarization is increased. The use of a multilayer birefringent reflective polarizing film (RPF) in lighting applications is described in applicants commonly assigned U.S. Patent Application Serial Numbers 08/418,009 and 08/479,319, also incorporated herein by reference. These applications describe the use of the multilayer RPF in lighting applications, especially in LCD displays

and polarized luminaires. The reflective polarizing element of these applications transmits light of a desired polarization and specularly reflects light of another polarization back into the diffuse source where it is randomized. When a multilayer RPF is used in this way, a separate diffuser film is typically used in luminaires or task lighting applications so that the light source is not directly visible. A reflective element is preferably also included in these polarized light fixtures, and the reflective element may comprise the BRMF of the present invention or any other suitable reflective surface that either randomizes the light reflected from the RPF or reflects the reflected light back into a diffusing source where it can be randomized and partially converted into the correct polarization to be transmitted by the polarizing element.

The DRPF of the present invention functions similar to the multilayer RPF to increase the amount of light of the desired polarization that is emitted by the polarized light fixture, however, the initially rejected light of the wrong polarization is diffusely reflected back into the light fixture where it may be randomized, partially converted to light of the correct polarization, and specularly transmitted through the polarizing element. The diffuse reflective polarizing film (DRPF) of the present invention is translucent so that a separate diffuser is not needed. When combined with the light source to make a diffuse reflecting polarized light fixture, a reflecting element is preferably also included to direct the reflected light back to the source and/or aid in the randomization and partial conversion of the reflected light into light of the correct polarization to be transmitted by the polarizing element. The reflecting element may be any suitable reflective material, as described above, and in particular may be the DRMF of the present invention. As such, the DRMF of the present invention may be used in one embodiment as the reflecting element and the DRPF of the present invention may be used as the polarizing element and/or the diffusing element.

In the light fixtures described herein, the light source may be coupled with the polarizing element and reflecting element in a variety of configurations. Some of the configurations will be described with respect to using the diffuse reflecting polarizing film (DRPF) of the present invention as the polarizing element and the

diffuse reflecting mirror film (DRMF) of the present invention as the reflecting element, but it should be recognized that various combinations of DRPF with other materials as the reflecting element and DRMF with other materials as the polarizing element are envisioned. In one configuration, the DRPF may be wrapped around such that it completely encloses the diffuse source. A separate reflector may be used in addition to the light source and DRPF. The reflector may be a diffuse reflective film (DRMF) which randomizes the light of polarization (b) that is reflected from the DRPF, or it may be a specular reflector which redirects light to the light emitting region of a diffuse randomizing light source. The DRMF may be oriented around one side of the light source and may be laminated or otherwise attached to the light source. In this configuration, the DRPF may also be laminated or otherwise attached so that it partially encloses the other side of the light source.

The embodiments of the present polarized light source using the DRPF have several advantages. The reflection and randomization process achieved with the light source and DRPF gives a polarized light fixture that is very efficient. The broadband reflectivity provided by the DRPF means that efficiency is achieved over a broad spectral range. In addition, the DRPF provides high off-angle reflectivity of the rejected polarization. These features make the DRPF/diffuse source combination useful over a broader range of the optical spectrum and over a broader range of angles than the embodiments incorporating bulk optic components. In addition, the DRPF is lightweight, thin and flexible, which makes it good for applications requiring low bulk and light weight. The DRPF also conforms well to the lamp surface and could be incorporated into the lamp manufacture. Furthermore, since the DRPF is a diffuse reflector, its opaque appearance obviates the need for a separate diffuser film that is typically used in polarized luminaires and task lighting fixtures to obscure the light source from direct viewing.

In yet another application, optical films of the present invention may be used to generate polarized light used in smoke detection systems or in the analysis of the polarization of light scattered from smoke particles, including those smoke

detection systems which attempt to define the nature or origin of the combustion as taught by U.S. 5,576,697 (Nagashima et al.).

Light Extractors

The optical films of the present invention may be used as light extractors in various optical devices, including light guides such as the Large Core Optical Fiber (LCOF) illustrated in FIG. 8. The LCOF **50** uses very efficient total internal reflection (TIR) to guide light substantial distances from an illuminator or light source **52**. However, when the optical films of the present invention are applied as an external cladding **54**, they upset the light guiding at the fiber-to-air interface, thereby ejecting light out into the surroundings. This feature may be used advantageously in various remote source lighting applications, such as architectural highlighting, decorative lighting, medical lighting, signage, visual guidance (e.g., on landing strips or in aisles for airplanes or theatres), display (e.g., instrument displays, especially those in which excessive heating is a problem) and exhibit lighting, roadway lighting, automotive lighting, downlighting, task lighting, accent lighting, and ambient lighting. In some applications, the films of the present invention may be applied as a cladding at multiple locations along the length of the fiber, thereby illuminating multiple locations from a single light source. Furthermore, since these systems are commonly equipped with UV and IR filters, the lighting produced by such systems will not degrade UV sensitive materials, nor will the light guides heat up with use.

The films of the present invention can also be made to extract only a single polarization of light, thereby creating a polarization-specific source. With proper configuration of the light fiber system, substantially all of the light injected into the fiber will eventually make its way through the extractor in the desired polarization. Polarization-specific sources can be made, for example, by using an optical film of the present invention which is a strong diffuse scatterer for light of a first polarization, but is a non-scattering, specular material which maintains a total internal reflection (TIR) cladding-to-surface interface for light of a second polarization. Such a system is described in Example 134.

Suitable light guides for use in the present invention include both side emitting and end emitting fibers. The light guides themselves may be glass or plastic and may be of varying diameters, depending on such factors as the required efficiency at collecting light, required flexibility, and whether the light guides are to be used alone or in bundles. The light guides may also be fiber optic light guides or prism light guides, with the later being more suitable for large scale applications, and the former being more suitable for smaller scale applications where cost per lumen is less important.

Commercially available light guides that are suitable for use in the present invention include those made from films of low Tg acrylic polymers, such as the optical lighting film available commercially from 3M under the tradename Scotch Optical Lighting Film (SOLF). Such film, which acts like a mirror towards light striking it at certain angles, is a transparent plastic film which has a prismatic surface (typically microreplicated) on one side and a smooth surface on the other. The film is commonly used in conjunction with a tubing or backing of a transparent or opaque plastic or metal. Other suitable light guides include the linear illumination fiber optics available commercially from Lumenyte under the tradename Fiberescent™, and the end-emitting fibers available commercially from Fiberstars under the tradename FiberSpots™.

Various light sources may be used in conjunction with the light guides made in accordance with the present invention, depending on the application to which the light guide is directed. Such sources are described, for example, in Lighting Futures, Vol. 1, No. 3 (1995), a publication of the Lighting Research Center, Rensselaer Polytechnic Institute, Troy, N.Y. Typically, a low voltage 20-75 watt MR16 lamp used in conjunction with a fiber optic system will be suitable for applications such as museum, display and accent lighting, while a 70-250 watt metal halide lamp, used in conjunction with a fiber optic or prism light guide system, is suitable for applications such as architectural or outdoor lighting applications. For applications requiring 250 watts or greater, metal halide or high pressure sodium lamps may be used in conjunction with prism light guide systems. Other suitable light sources include 60 watt xenon metal halide lamps,

commercially available from General Electric Company, Danbury, Connecticut, which are particularly useful for automotive applications, and sulfur lamps, commercially available from Fusion Lighting, Rockville, MD, which have been used successfully on an experimental basis in prism light guide systems. Compact and tubular fluorescent lamps may also be used where a larger diffuse light source is needed. Sunlight may also be used with fiber optic or prism light guide systems, and in conjunction with mirrors or lenses, as part of a sunlight harvesting system.

In some backlight display devices, such as those used in avionics applications where high levels of ambient light impinge on the front surface of the device, high intensities radiating from the display are required to provide sufficient contrast to the display. Consequently, excessive heating of the backlight assembly in such systems can occur unless means are provided to dissipate the unwanted heat. A variety of means are used in the art to eliminate the heat, such as the use of cold mirrors and filters and other means.

In most new aircraft, ambient sunlight potentially reduces contrast to the flat panel displays used, and spatial requirements for the ensemble of displays are critical desgin parameters. Therefore, in one form of the present invention, light is transported to the display(s) via fiber optics from a remotely located, but intense, source, where the latter can be cooled efficiently and the undesired heat not affect the operation of the display device. Since these displays typically work on the basis of polarized light propagating through a liquid crystal display, the optical films of the present invention may be used in such systems as light extractors of substantially one polarization. The second polarization would continue to reflect inside the optical fiber until its polarization is converted to the first polarization and can be emitted from the light extractor at the places where the light is needed.

Overview of Examples

The following Examples illustrate the production of various optical materials in accordance with the present invention, as well as the spectral properties of these materials. Unless otherwise indicated, percent composition refers to percent composition by weight. The polyethylene naphthalate resin used

was produced for these samples using ethylene glycol and dimethyl-2,6-naphthalenedicarboxylate, available from Amoco Corp., Chicago, IL. These reagents were polymerized to various intrinsic viscosities (IV) using conventional polyester resin polymerization techniques. Syndiotactic polystyrene (sPS) may be produced in accordance with the method disclosed in U. S. Patent 4,680,353 (Ishihara et al). The examples includes various polymer pairs, various fractions of continuous and disperse phases and other additives or process changes as discussed below.

Stretching or orienting of the samples was provided using either conventional orientation equipment used for making polyester film or a laboratory batch orienter. The laboratory batch orienter used was designed to use a small piece of cast material (7.5cm by 7.5cm) cut from the extruded cast web and held by a square array of 24 grippers (6 on each side). The orientation temperature of the sample was controlled a hot air blower and the film sample was oriented through a mechanical system that increased the distance between the grippers in one or both directions at a controlled rate. Samples stretched in both directions could be oriented sequentially or simultaneously. For samples that were oriented in the constrained mode (C), all grippers hold the web and the grippers move only in one dimension. Whereas, in the unconstrained mode (U), the grippers that hold the film at a fixed dimension perpendicular to the direction of stretch are not engaged and the film is allowed to relax or neckdown in that dimension.

Polarized diffuse transmission and reflection were measured using a Perkin Elmer Lambda 19 ultraviolet/visible/near infrared spectrophotometer equipped with a Perkin Elmer Labsphere S900-1000 150 millimeter integrating sphere accessory and a Glan-Thompson cube polarizer. Parallel and crossed transmission and reflection values were measured with the e-vector of the polarized light parallel or perpendicular, respectively, to the stretch direction of the film. All scans were continuous and were conducted with a scan rate of 480 nanometers per minute and a slit width of 2 nanometers. Reflection was performed in the "V-reflection" mode. Transmission and reflectance values are averages of all wavelengths from 400 to 700 nanometers.

Transmission electron micrographs were taken of finished film, cross-sectioned in a plan perpendicular to the machine direction to determine the nature of the dispersed phase. The outer layers of three-layer constructions were removed from oriented film, leaving only the blend layer for embedding. Samples were embedded in 3M Scotchcast™ 5 Electrical Resin which was cured at room temperature. The embedded samples were microtomed using a diamond knife, on a Reichert Ultracut™ S microtome at room temperature, into thin sections of approximately 90nm thickness, using a cutting rate of 0.2 millimeters per second. The thin sections were floated onto distilled, deionized water and collected for transmission electron microscopic evaluation on a 200 mesh copper grid reinforced with a carbon/formvor substrate. Photomicrographs were taken using a JEOL 200CX Transmission Electron Microscope.

Scanning electron microscopic evaluations were performed on cast webs prior to film orientation to determine the nature of the disperse phase. Pieces of web were fractured to expose a plane perpendicular to the machine direction while immersed in liquid nitrogen. Samples were then trimmed and mounted on aluminum stubs prior to sputter coating with gold palladium. Photomicrographs were taken using a Hitachi S530 Scanning Electron Microscope.

EXAMPLE 1

In Example 1, an optical film was made in accordance with the invention by extruding a blend of 75% polyethylene naphthalate (PEN) as the continuous or major phase and 25% of polymethylmethacrylate (PMMA) as the disperse or minor phase into a cast film or sheet about 380 microns thick using conventional extrusion and casting techniques. The PEN had an intrinsic viscosity (IV) of 0.52 (measured in 60% phenol, 40% dichlorobenzene). The PMMA was obtained from ICI Americas, Inc., Wilmington, DE, under the product designation CP82. The extruder used was a 3.15 cm (1.24") Brabender with a 1 tube 60 μm Tegra filter. The die was a 30.4 cm (12") EDI Ultraflex™ 40.

About 24 hours after the film was extruded, the cast film was oriented in the width or transverse direction (TD) on a polyester film tentering device. The

stretching was accomplished at about 9.1 meters per minute (30 ft/min) with an output width of about 140 cm (55 inches) and a stretching temperature of about 160°C (320°F). The total reflectivity of the stretched sample was measured with an integrating sphere attachment on a Lambda 19 spectrophotometer with the sample beam polarized with a Glan-Thompson cube polarizer. The sample had a 75% parallel reflectivity (i.e., reflectivity was measured with the stretch direction of the film parallel to the e-vector of the polarized light), and 52% crossed reflectivity (i.e., reflectivity was measured with the e-vector of the polarized light perpendicular to the stretch direction).

EXAMPLE 2

In Example 2, an optical film was made and evaluated in a manner similar to Example 1 except using a blend of 75% PEN, 25% syndiotactic polystyrene (sPS), 0.2% of a polystyrene glycidyl methacrylate compatibilizer, and 0.25% each of Irganox™ 1010 and Ultranox™ 626. The synthesis of polystyrene glycidyl methacrylate is described in Polymer Processes, "Chemical Technology of Plastics, Resins, Rubbers, Adhesives and Fibers", Vol. 10, Chap. 3, pp. 69-109 (1956)(Ed. by Calvin E. Schildknecht).

The PEN had an intrinsic viscosity of 0.52 measured in 60% phenol, 40% dichlorobenzene. The sPS was obtained from Dow Chemical Co. and had a weight average molecular weight of about 200,000, designated subsequently as sPS-200-0. The parallel reflectivity on the stretched film sample was determined to be 73.3%, and the crossed reflectivity was determined to be 35%.

EXAMPLE 3

In Example 3, an optical film was made and evaluated in a manner similar to Example 2 except the compatibilizer level was raised to 0.6%. The resulting parallel reflectivity was determined to be 81% and the crossed reflectivity was determined to be 35.6%.

EXAMPLE 4

In Example 4, an three layer optical film was made in accordance with the present invention utilizing conventional three layer coextrusion techniques. The film had a core layer and a skin layer on each side of the core layer. The core layer consisted of a blend of 75% PEN and 25% sPS 200-4 (the designation sPS-200-4 refers to a copolymer of syndiotactic-polystyrene containing 4 mole % of para-methyl styrene), and each skin layer consisted of 100% PEN having an intrinsic viscosity of 0.56 measured in 60% phenol, 40% dichlorobenzene.

The resulting three-layer cast film had a core layer thickness of about 415 microns, and each skin layer was about 110 microns thick for a total thickness of about 635 microns. A laboratory batch stretcher was used to stretch the resulting three-layer cast film about 6 to 1 in the machine direction (MD) at a temperature of about 129°C. Because the edges of the film sample parallel to the stretch direction were not gripped by the lab stretcher, the sample was unconstrained in the transverse direction (TD) and the sample necked-down in the TD about 50% as a result of the stretch procedure.

Optical performance was evaluated in a manner similar to Example 1. The parallel reflectivity was determined to be 80.1%, and the crossed reflectivity was determined to be 15%. These results demonstrate that the film performs as a low absorbing, energy conserving system.

EXAMPLES 5-29

In Examples 5-29, a series of optical films were produced and evaluated in a manner similar to Example 4, except the sPS fraction in the core layer and the IV of the PEN resin used were varied as shown in Table 1. The IV of the PEN resin in the core layer and that in the skin layers was the same for a given sample. The total thickness of the cast sheet was about 625 microns with about two-thirds of this total in the core layer and the balance in the skin layers which were approximately equal in thickness. Various blends of PEN and sPS in the core layer were produced, as indicated in Table 1. The films were stretched to a stretch ratio of about 6:1 in either the machine direction (MD) or in the transverse direction

(TD) at various temperatures as indicated in Table 1. Some of the samples were constrained (C) in the direction perpendicular to the stretch direction to prevent the sample from necking down during stretching. The samples labeled "U" in Table 1 were unconstrained and permitted to neckdown in the unconstrained dimension. Certain optical properties of the stretched samples, including percent transmission, reflection, and absorption, were measured along axes both parallel and crossed or perpendicular to the direction of stretch. The results are summarized in TABLE 1.

Heat setting, as indicated for Examples 24-27, was accomplished by manually constraining the two edges of the stretched sample which were perpendicular to the direction of stretch by clamping to an appropriately sized rigid frame and placing the clamped sample in an oven at the indicated temperature for 1 minute. The two sides of the sample parallel to the direction of stretch were unconstrained (U) or not clamped and allowed to neckdown. The heatsetting of Example 29 was similar except all four of the edges of the stretched sample were constrained (C) or clamped. Example 28 was not heat set.

TABLE 1

Example Number	Stretch Temp. (°C)	Stretch Direction (MD/TD)	Stretch Cons-trained (C/U)	PEN IV	Fraction (sPS)	Heat Set Temp.	Cons-trained Heat Set	Trans. (Perp.)	Trans. (Para.)	Reflec. (Perp.)	Reflec. (Para.)
5	135	TD	C	0.53	0.25			76.2	20.4	22.6	75.3
6	135	TD	C	0.47	0.75			80.2	58.4	19.4	40
7	142	TD	C	0.53	0.25			74.2	21.8	25.3	77.3
8	142	TD	C	0.47	0.75			76.0	41.0	23.8	55.6
9	129	TD	C	0.53	0.25			71.2	21.2	26.5	76.2
10	129	TD	C	0.47	0.75			76.8	48.9	22.4	49.6
11	129	MD	U	0.53	0.25			81.5	27.6	17.2	67
12	129	TD	U	0.53	0.25			66.8	22.1	25	71.9
13	129	MD	U	0.47	0.25			79.5	20.3	19.3	73.7
14	129	TD	U	0.47	0.25			66.3	26.2	32.5	69.4
15	129	TD	U	0.47	0.5			73.0	26.2	24.7	68.7
16	129	MD	U	0.47	0.5			75.4	20.6	23.2	76.1
17	129	MD	U	0.47	0.1			82.1	27.3	16.9	67

Example Number	Stretch Temp. (°C)	Stretch Direction (MD/TD)	Stretch Cons-trained (C/U)	PEN IV	Fraction (sPS)	Heat Set Temp.	Cons-trained Heat Set	Trans. (Perp.)	Trans. (Para.)	Reflec. (Perp.)	Reflec. (Para.)
18	129	MD	U	0.56	0.25			80.1	15.0	18	80.3
19	129	TD	U	0.56	0.25			70.2	21.6	25.2	70.7
20	129	MD	C	0.47	0.25			75.8	28.7	23.4	70.1
21	129	MD	C	0.47	0.5			79.8	27.8	19.7	70.8
22	135	MD	C	0.47	0.1			80.5	36.7	19.2	62.6
23	135	MD	C	0.53	0.25			77.2	21.1	21.8	76.6
24	129	MD	U	0.56	0.25	150	U	83.7	17.3	17.3	74
25	129	MD	U	0.56	0.25	220	U	82.1	16	18	75.8
26	129	MD	U	0.56	0.25	135	U	84.7	17	18	75.3
27	129	MD	U	0.56	0.25	165	U	83	16	16.5	76.3
28	129	MD	U	0.56	0.25	CNTRL		83.7	17	17.5	76
29	129	MD	U	0.56	0.25	230	C				
29	129	MD	U	0.56	0.25	230	C				

All of the above samples were observed to contain varying snapes of the disperse phase depending on the location of the disperse phase within the body of the film sample. The disperse phase inclusions located nearer the surfaces of the samples were observed to be of an elongated shape rather than more nearly spherical. The inclusions which are more nearly centered between the surfaces of the samples may be more nearly spherical. This is true even for the samples with the skin layers, but the magnitude of the effect is reduced with the skin layers. The addition of the skin layers improves the processing of the films by reducing the tendency for splitting during the stretching operation.

Without wishing to be bound by theory, the elongation of the inclusions (disperse phase) in the core layer of the cast film is thought to be the result of shear on the blend as it is transported through the die. This elongation feature may be altered by varying physical dimensions of the die, extrusion temperatures, flow rate of the extrudate, as well as chemical aspects of the continuous and disperse phase materials which would alter their relative melt viscosities. Certain applications or uses may benefit from providing some elongation to the disperse phase during extrusion. For those applications which are subsequently stretched in the machine direction, starting with a disperse phase elongated during extrusion may allow a higher aspect ratio to be reached in the resulting disperse phase.

Another notable feature is the fact that a noticeable improvement in performance is observed when the same sample is stretched unconstrained. Thus, in Example ~~9~~ 13, the % transmission was 79.5% and 20.3% in the parallel and perpendicular directions, respectively. By contrast, the transmission in Example ~~16~~ 20 was only 75.8% and 28.7% in the parallel and perpendicular directions, respectively. There is a thickness increase relative to constrained stretching when samples are stretched unconstrained, but since both transmission and extinction improve, the index match is probably being improved.

An alternative way to provide refractive index control is to modify the chemistry of the materials. For example, a copolymer of 30 wt % of interpolymerized units derived from terephthalic acid and 70 wt % of units derived from 2,6-naphthalic acid has a refractive index 0.02 units lower than a 100% PEN

AMENDED SHEET

polymer. Other monomers or ratios may have slightly different results. This type of change may be used to more closely match the refractive indices in one axis while only causing a slight reduction in the axis which desires a large difference. In other words, the benefits attained by more closely matching the index values in one axis more than compensate for the reduction in an orthogonal axis in which a large difference is desired. Secondly, a chemical change may be desirable to alter the temperature range in which stretching occurs. A copolymer of sPS and varying ratios of para methyl styrene monomer will alter the optimum stretch-temperature range. A combination of these techniques may be necessary to most effectively optimize the total system for processing and resulting refractive index matches and differences. Thus, an improved control of the final performance may be attained by optimizing the process and chemistry in terms of stretching conditions and further adjusting the chemistry of the materials to maximize the difference in refractive index in at least one axis and minimizing the difference at least one orthogonal axis.

These samples displayed better optical performance if oriented in the MD rather than TD direction (compare Examples ~~14-15~~ 18 and 19). Without wishing to be bound by theory, it is believed that different geometry inclusions are developed with an MD orientation than with a TD orientation and that these inclusions have higher aspect ratios, making non-ideal end effects less important. The non-ideal end effects refers to the complex geometry/index of refraction relationship at the tip of each end of the elongated particles. The interior or non-end of the particles are thought to have a uniform geometry and refractive index which is thought to be desirable. Thus, the higher the percentage of the elongated particle that is uniform, the better the optical performance.

The extinction ratio of these materials is the ratio of the transmission for polarizations perpendicular to the stretch direction to that parallel to the stretch direction. For the examples cited in Table 1, the extinction ratio ranges between about 2 and about 5, although extinction ratios up to 7 have been observed in optical bodies made in accordance with the present invention without any attempt to optimize the extinction ratio. It is expected that even higher extinction ratios

AMENDED SHEET

(e.g., greater than 100) can be achieved by adjusting film thickness, inclusion volume fraction, particle size, and the degree of index match and mismatch, or through the use of iodine or other dyes.

EXAMPLES 30-100

In Examples 30-100, samples of the invention were made using various materials as listed in Table 2. PEN 42, PEN 47, PEN 53, PEN 56, and PEN 60 refer to polyethylene naphthalate having an intrinsic viscosity (IV) of 0.42, 0.47, 0.53, 0.56, and 0.60, respectively, measured in 60% phenol, 40% dichlorobenzene. The particular sPS-200-4 used was obtained from Dow Chemical Co. Ecdel™ 9967 and Eastar™ are copolyesters which are available commercially from Eastman Chemical Co., Rochester, NY. Surlyn™ 1706 is an ionomer resin available from E.I. du Pont de Nemours & Co., Wilmington, DE. The materials listed as Additive 1 or 2 include polystyrene glycidyl methacrylate. The designations GMAPS2, GMAPS5, and GMAPS8 refer to glycidyl methacrylate having 2, 5, and 8% by weight, respectively, of glycidyl methacrylate in the total copolymer. ETPB refers to the crosslinking agent ethyltriphenylphosphonium bromide. PMMA VO44 refers to a polymethylmethacrylate available commercially from Atohaas North America, Inc.

The optical film samples were produced in a manner similar to Example 4 except for the differences noted in Table 2 and discussed below. The continuous phase and its ratio of the total is reported as major phase. The disperse phase and its ratio of the total is reported as minor phase. The value reported for blend thickness represents the approximate thickness of the core layer in microns. The thickness of the skin layers varied when the core layer thickness varied, but was kept to a constant ratio, i.e., the skin layers were approximately equal and the total of the two skin layers was about one-third of the total thickness. The size of the disperse phase was determined for some samples by either scanning electron microscope (SEM) or transmission electron microscope (TEM). Those examples which were subsequently stretched using the laboratory batch orienter are shown by an "X" in the column labeled Batch Stretched.

TABLE 2

Example Number	Major Phase	Major Phase (%)	Minor Phase	Minor Phase (%)	Core Layer (microns)	Additive 1	Additive 2	SEMs	TEM (microns)	Batch Stretched
30	PEN.42	75	sPS-200-4	25	9.8	-	-	-	-	-
31	PEN.42	75	sPS-200-4	25	16.3	-	-	10	-	-
32	PEN.47	75	sPS-200-4	25	9.8	-	-	-	-	x
33	PEN.47	75	sPS-200-4	25	16.3	-	-	8	-	x
34	PEN.47	50	sPS-200-4	50	9.8	-	-	-	-	-
35	PEN.47	50	sPS-200-4	50	16.3	-	-	5	-	x
36	PEN.47	90	sPS-200-4	10	9.8	-	-	-	-	-
37	PEN.47	90	sPS-200-4	10	16.3	-	-	3	-	x
38	PEN.53	75	sPS-200-4	25	9.8	-	-	-	-	-
39	PEN.53	75	sPS-200-4	25	16.3	-	-	7	-	x
40	PEN.56	75	sPS-200-4	25	9.8	-	-	-	-	-
41	PEN.56	75	sPS-200-4	25	16.3	-	-	6	-	x
42	sPS-200-4	75	PEN.42	25	9.8	-	-	-	-	-

Example Number	Major Phase	Major Phase (%)	Minor Phase	Minor Phase (%)	Core Layer (microns)	Additive 1	Additive 2	SEMs	TEM (microns)	Batch Stretched
43	sPS-200-4	75	PEN.42	25	16.3	-	-	-	-	-
44	sPS-200-4	75	PEN.47	25	9.8	-	-	-	-	-
45	sPS-200-4	75	PEN.47	25	16.3	-	-	-	-	x
46	sPS-200-4	75	PEN.53	25	16.3	-	-	-	-	-
47	sPS-200-4	75	PEN.53	25	9.8	-	-	-	-	-
48	sPS-200-4	75	PEN.56	25	9.8	-	-	-	-	-
49	sPS-200-4	75	PEN.56	25	16.3	-	-	-	-	-
50	PET.60	75	Ecdel ™ 9967	25	16.3	-	-	-	-	-

Example Number	Major Phase	Major Phase (%)	Minor Phase	Minor Phase (%)	Core Layer (microns)	Additive 1	Additive 2	SEMs	TEM (microns)	Batch Stretched
51	PET.60	75	Surlyn™ 1706	25	16.3	-	-	2	-	-
52	PEN.47	75	Ecdel ™ 9967	25	16.3	-	-	2	-	x
53	PEN.47	100	-	-	16.3	-	-	-	-	-
54	PEN.47	75	sPS-200	25	16.3	-	-	-	-	-
55	PEN.47	75	sPS-200	25	9.8	-	-	10	-	-
56	PEN.47	75	sPS-320	25	9.8	-	-	12	-	-
57	PEN.47	75	sPS-320	25	16.3	-	-	-	-	-
58	PEN.47	95	sPS-320	5	9.8	-	-	-	-	-
59	PEN.47	95	sPS-320	5	16.3	-	-	-	-	-
60	PEN.56	100	-	-	16.3, 9.8	-	-	-	-	x
61	PEN.56	75	sPS-200	25	9.8	-	-	10	-	-
62	PEN.56	75	sPS-200	25	16.3	-	-	-	-	x
63	PEN.56	95	sPS-200	5	9.8	-	-	-	-	-
64	PEN.56	95	sPS-200	5	16.3	-	-	-	-	x
65	PEN.56	75	sPS-320	25	9.8	-	-	10	-	-

Example Number	Major Phase	Major Phase (%)	Minor Phase	Minor Phase (%)	Core Layer (microns)	Additive 1	Additive 2	SEMs	TEM (microns)	Batch Stretched
66	PEN.56	75	sPS-320	25	16.3	-	-	-	-	-
67	PEN.47	95	sPS-200	5	16.3	2% GMAPS2	0.25% ETPB	1	0.3	x
68	PEN.47	95	sPS-200	5	9.8	2% GMAPS2	0.25% ETPB	-	-	-
69	PEN.56	75	sPS-200	25	9.8	6% GMAPS2	0.25% ETPB	-	-	-
70	PEN.56	75	sPS-200	25	16.3	6% GMAPS2	0.25% ETPB	0.5	2.5	x
71	PEN.56	75	sPS-200	25	9.8	2% GMAPS2	0.25% ETPB	-	0.8	-
72	PEN.56	75	sPS-200	25	16.3	2% GMAPS2	0.25% ETPB	1	-	-
73	PEN.56	95	sPS-200	5	9.8	2% GMAPS2	0.25% ETPB	-	-	-
74	PEN.56	95	sPS-200	5	16.3	2% GMAPS2	0.25% ETPB	-	-	-

Example Number	Major Phase	Major Phase (%)	Minor Phase	Minor Phase (%)	Core Layer (microns)	Additive 1	Additive 2	SEMs	TEM (microns)	Batch Stretched
75	PEN.56	75	sPS-200	25	9.8	6% GMAPS2	0.25% ETPB	-	-	-
76	PEN.56	75	sPS-200	25	16.3	6% GMAPS2	0.25% ETPB	0.8	1	x
77	PEN.56	75	sPS-200	25	9.8	2% GMAPS2	0.25% ETPB	-	-	-
78	PEN.56	75	sPS-200	25	16.3	2% GMAPS2	0.25% ETPB	-	-	-
79	PEN.56	75	sPS-200	25	9.8	6% GMAPS2	0.25% ETPB	-	-	-
80	PEN.56	75	sPS-200	25	16.3	6% GMAPS2	0.25% ETPB	-	-	x
81	PEN.56	75	sPS-200	25	9.8	6% GMAPS2	0.25% ETPB	-	-	-
82	PEN.56	75	sPS-200	25	16.3	6% GMAPS2	0.25% ETPB	0.5	-	-

Example Number	Major Phase	Major Phase (%)	Minor Phase	Minor Phase (%)	Core Layer (microns)	Additive 1	Additive 2	SEMs	TEM (microns)	Batch Stretched
83	PEN.56	95	sPS-200	5	9.8	2% GMAPS2	0.25% ETPB	-	-	-
84	PEN.56	95	sPS-200	5	16.3	2% GMAPS2	0.25% ETPB	-	-	-
85	PEN.56	75	sPS-200	25	9.8	0.5% GMAPS2	0.25% ETPB	-	-	-
86	PEN.56	75	sPS-200	25	9.8	0.5% GMAPS2	0.25% ETPB	-	-	-
87	PEN.47	75	Eastar	25	16.3	-	-	-	-	x
88	PEN.47	75	Eastar	25	9.8	-	-	-	-	-
89	PEN.47	75	Eastar	25	16.3	-	-	-	-	-
90	PEN.47	75	Eastar	25	9.8	-	-	-	-	-
91	PEN.47	75	PMMA VO44	25	9.8	-	-	-	-	-
92	PEN.47	75	PMMA VO44	25	16.3	-	-	10	-	-

Example Number	Major Phase	Major Phase (%)	Minor Phase	Minor Phase (%)	Core Layer (microns)	Additive 1	Additive 2	SEMs	TEM (microns)	Batch Stretched
93	PEN.47	75	PMMA VO44	25	16.3	6% MMA/GMA	-	-	0.7	-
94	PEN.47	75	PMMA VO44	25	9.8	6% MMA/GMA	`	-	-	-
95	PEN.47	75	PMMA VO44	25	9.8	2% MMA/GMA	-	-	1.2	-
96	PEN.47	75	PMMA	25	16.3	2% MMA/GMA	-	-	-	x
97	PEN.47	75	sPS-200-4 VO44	25	916.3	0.5% Congo Red	-	-	-	x
98	PEN.47	75	sPS-200-4	25	16.3	0.15% Congo Red	-	-	-	x
99	PEN.47	75	sPS-200-4	25	9.8	0.25% Methylene Blue	-	-	-	-

Example Number	Major Phase	Major Phase (%)	Minor Phase	Minor Phase (%)	Core Layer (microns)	Additive 1	Additive 2	SEMs	TEM (microns)	Batch Stretched
100	PEN.47	75	sPS-200-4	25	9.8	0-0.25% Methylene Blue	-	-	-	-

The presence of the various compatibilizers was found to reduce the size of the included or disperse phase.

EXAMPLE 101

In Example 101, an optical film was made in a manner similar to Example 4 except the resulting core thickness was about 420 microns thick, and each skin layer was about 105 microns thick. The PEN had a 0.56 IV. The cast film was oriented as in Example 1, except the temperature of stretch was 165°C and there was a 15 day delay between casting and stretching. The transmission was 87.1% and 39.7% for parallel and perpendicularly polarized light, respectively.

EXAMPLES 102 - 121

In Examples 102 - 121, optical films were made as in Example 101, except that orientation conditions were varied and/or the sPS-200-0 was replaced with either copolymers of sPS containing either 4 or 8 mole % of para-methyl styrene or with an atactic-form of styrene, Styron 663 (available from Dow Chemical Company, Midland, Michigan) as listed in Table 3. Evaluations of transmission properties are also reported. Transmission values are averaged over all wavelengths between 450-700 nm.

TABLE 3

Ex.	% sPS	PS	PEN IV	Temperature of Draw (°C)	Rail Setting (cm)	Perpendicular Transmission (%)	Parallel Transmission (%)
101	25	200-0	0.56	165	152	87.1	39.7
102	35	200-0	0.56	165	152	87.8	44.4
103	15	200-4	0.56	165	152	86.1	43.5
104	25	200-4	0.56	165	152	86.5	43.6
105	35	200-4	0.56	165	152	88.2	50.7
106	15	200-8	0.56	165	152	89.3	40.7

Ex.	% sPS	PS	PEN IV	Temperature of Draw (°C)	Rail Setting (cm)	Perpendicular Transmission (%)	Parallel Transmission (%)
107	25	200-8	0.56	165	152	88.5	42.8
108	35	200-8	0.56	165	152	88.6	43.3
109	15	Styron 663	0.56	165	152	89.3	45.7
110	25	Styron 663	0.56	165	152	87.8	41.6
111	35	Styron 663	0.56	165	152	88.8	48.2
112	15	Styron 663	0.48	165	152	88.5	62.8
113	25	Styron 663	0.48	165	152	87.1	59.6
114	35	Styron 663	0.48	165	152	86.8	59.6
115	15	200-0	0.48	165	152	88.0	58.3
116	25	200-0	0.48	165	152	88.0	58.7
117	35	200-0	0.48	165	152	88.5	60.6
118	15	200-4	0.48	165	152	89.0	57.4
119	35	200-4	0.48	165	152	87.3	64.0
120	35	200-0	0.56	171	127	86.5	65.1
121	35	200-0	0.56	171	152	88.1	61.5

These examples indicate that the particles of the included phase are elongated more in the machine direction in high IV PEN than in low IV PEN. This is consistent with the observation that, in low IV PEN, stretching occurs to a greater extent near the surface of the film than at points interior to the film, with the result that fibrillar structures are formed near the surface and spherical structures are formed towards the center.

Some of these Examples suggest that the orientation temperatures and degree of orientation are important variables in achieving the desired effect. Examples 109 to 114 suggest that quiescent crystallization need not be the only reason for the lack of transmission of a preferred polarization of light.

EXAMPLES 122-124

In Example 122, a multilayer optical film was made in accordance with the invention by means of a 209 layer feedblock. The feedblock was fed with two materials: (1) PEN at 38.6 kg per hour (intrinsic viscosity of 0.48); and (2) a blend of 95% coPEN and 5% by weight of sPS homopolymer (200,000 molecular weight). The coPEN was a copolymer based on 70 mole % naphthalene dicarboxylate and 30 mole % dimethyl isophthalate polymerized with ethylene glycol to an intrinsic viscosity of 0.59. The coPEN/sPS blend was fed into the feedblock at a rate of 34.1 kg per hour.

The coPEN blend material was on the outside of the extrudate, and the layer composition of the resulting stack of layers alternated between the two materials. The thicknesses of the layers was designed to result in a one-quarter wavelength stack with a linear gradient of thicknesses, and having a 1.3 ratio from the thinnest to the thickest layer. Then, a thicker skin layer of coPEN (made in accordance with the method described above to make the coPEN/sPS blend, except the molar ratios were 70/15/15 naphthalene dicarboxylate /dimethyl terephthalate/dimethyl isophthalate) devoid of sPS was added to each side of the 209 layer composite. The total skin layer was added at a rate of 29.5 kg per hour, with about one-half of this quantity on each side or surface of the stack.

The resulting skin layer clad multilayer composite was extruded through a multiplier to achieve a multilayer composite of 421 layers. The resulting multilayer composite was then clad with another skin layer of the 70/15/15 coPEN on each surface at a total rate of 29.5 kg per hour with about one-half of this quantity on each side. Since this second skin layer may not be separately detectable from the existing skin layer (as the material is the same), for the

purposes of this discussion, the resulting extra thick skin layer will be counted as only one layer.

The resulting 421 layer composite was again extruded through a 1.40 ratio asymmetric multiplier to achieve a 841 layer film which was then cast into a sheet by extruding through a die and quenching into a sheet about 30 mils thick. The resulting cast sheet was then oriented in the width direction using a conventional film making tentering device. The sheet was stretched at a temperature of about 300°F (149°C) to a stretch ratio of about 6:1 and at a stretch rate of about 20% per second. The resulting stretched film was about 5 mils thick.

In Example 123, a multilayer optical film was made as in Example 122, except that the amount of sPS in the coPEN/sPS blend was 20% instead of 5%.

In Example 124, a multilayer optical film was made as in Example 122, except that no sPS was added to the film.

The results reported in Table 4 include a measure of the optical gain of the film. The optical gain of a film is the ratio of light transmitted through an LCD panel from a backlight with the film inserted between the two to the light transmitted without the film in place. The significance of optical gain in the context of optical films is described in WO 95/17692 in relation to Figure 2 of that reference. A higher gain value is generally desirable. The transmission values include values obtained when the light source was polarized parallel to the stretch direction ($T_{\parallel}$) and light polarized perpendicular to the stretch direction ($T_{\perp}$). Off-angle-color (OAC) was measured using an Oriel spectrophotometer as the root mean square deviation of p-polarized transmission at 50 degree incident light of wavelength between 400 and 700 nm.

TABLE 4

Ex.	mole % sPS	Gain	$T_{\perp}$ (%)	$T_{\parallel}$ (%)	OAC (%)
122	5	1.5	83	2	1.5
123	20	1.45	81	1.5	1.2
124	0	1.6	87	5	3.5

The value of off-angle-color (OAC) demonstrates the advantage of using a multilayer construction within the context of the present invention. In particular, such a construction can be used to substantially reduce OAC with only a modest reduction in gain. This tradeoff may have advantages in some applications. The values of $T_{\parallel}$ for the examples of the invention may be lower than expected because light scattered by the sPS dispersed phase may not be received by the detector.

EXAMPLE 125

A three layer film was made in accordance with Example 4. The core layer consisted of 70% coPEN (whose intrinsic viscosity was 0.55 measured in 60% phenol, 40% dichlorobenzene), 30% sPS 200-7, plus an additional 2% Dylark 332-80 (available from NOVA Chemical). Each skin consisted of 100% coPET having an intrinsic viscosity of 0.65 measured in methylene chloride.

The coPEN was a copolymer based on 62 mole % naphthalene dicarboxylate and 38 mole % dimethyl terephthalate. The coPET was a copolymer based on 80 mole % dimethyl carboxylate and 20 mole % dimethyl isophthalate.

The cast film was oriented in a manner consistent with Example 1. The stretching was accomplished at 5.8 meters per minute (19 feet per minute) with an output width of 147 cm (58 inches). The stretch temperature was 124°C. The heat set temperature was 163°C. The perpendicular transmission was 85.3%, and the parallel transmission was 21.7%.

EXAMPLES 126 - 130

The following examples illustrate the production of a co-continuous morphology in an optical system of the present invention.

In Examples 126 through 130, a series of optical films were produced and evaluated in a manner similar to Example 125, except the sPS fraction in the core layer and the stretch temperature were varied as shown in Table 5.

TABLE 5

Example Number	Fraction sPS	Dispersed or Co-continuous	Stretch Temperature (°C)	Trans. (Perp.)	Trans. (Para.)
125	0.30	D	124	85.3	21.7
126	0.35	D	135	86.3	21.1
127	0.40	D	129	86.4	21.9
128	0.44	--	124	85.8	25.9
129	0.53	C	129	86.6	33.6
130	0.81	D	135	88.1	69

The parallel and perpendicular transmission values for Examples 125 to 130 show good optical performance. The high value for perpendicular transmission for Example 130 transmission suggests an effective match in the refractive indices in both phases for polarized light aligned in the direction perpendicular to the stretch direction.

Scanning electron micrographs were taken of fracture surfaces of cast web for Examples 126 and 127. As in Example 125, there was clear evidence of spherical or elliptical particles dispersed in an otherwise continuous matrix. Transmission electron micrographs were taken for Examples 129 and 130; these are shown in Figs. 6a and 6b, respectively. Fig. 6a illustrates the morphology of co-continuous phases. Inspection of the micrograph shows inclusions of both the coPEN and the sPS phases, as well as regions where each appears to be the continuous phase. By contrast, Fig. 6b shows coPEN dispersed into an sPS matrix.

EXAMPLE 131

A three layer film was made in accordance with Example 4. The core layer consisted of 85% coPEN whose instrinsic viscosity was 0.51 measured in a solution of 60% phenol and 40% dichlorobenzene, and 15% 250k-7, plus an additional 2% Dylark™ 332-80. Each skin consisted of 100% coPEN.

The coPEN used as part of the core was a copolymer based on 70 mole % naphthalene dicarboxylate and 30 mole % dimethyl terephthalate. The coPEN

used in the skin layers was a copolymer based on 70 mole % naphthalene dicarboxylate and 30 mole % dimethyl isophthalate.

The cast film was oriented in a manner consistent with Example 1. The stretching was accomplished at 5.3 meters per minute (17.4 feet per minute) with an output width of 124.5 cm (49 inches). The stretch temperature was 118°C. The heat set temperature was 141°C. The perpendicular transmission was 81.9%, and the parallel transmission was 32.7%. The perpendicular transmission spectrum is presented in Figure 7.

EXAMPLE 132

A film with an antireflection layer was prepared by first adding 10 grams of Remet™ SP-30 (Remet Coporation, Chadwicks, NY) with 1 gram Tritox™ X-100 (Rohm and Haas, Philadelphia, PA) into 89 grams of deionized water. The solution was coated onto a piece of film from Example 131 utilizing a #3 wire wound rod to yield a dry coating thickness of approximately 200 nanometers. The perpendicular transmission was 83.8%, and the parallel transmission was 33.3%.

EXAMPLE 133

Example 131 was repeated, except that both sides of the film were coated with an antireflection layer. The perpendicular transmission was 86.2%, and the parallel transmission was 33.8%.

The perpendicular transmission spectra for Examples 131-133 are presented in Fig. 7. One can see from Fig. 7 that the overall slope of the perpendicular transmission as a function of wavelength is lower for Examples 132-133 relative to Example 131, particularly for the range of wavelength from 450 nm to 700 nm. One skilled in the art will appreciate that a film exhibiting a flat transmission curve as a function of the wavelength of light will minimize any changes in color to a resultant display device into which the reflective polarizer might be incorporated.

EXAMPLES 134 - 135

These examples illustrates the use of the films of the present invention as high efficiency light extractors for light guiding structures.

In Example 134, an optical film was made in accordance with the present invention by extruding a composition consisting of 30% sPS in a matrix of 70/30/0 coPEN. The extruded film was oriented in the machine direction to a stretch ratio of 2.5:1.

In Example 135, a second film was made from the same composition as Example 134 and using a similar procedure. However, instead of orienting the film in the machine direction, the film was oriented uniaxially in the direction transverse to the machine direction using a tenter stretch of 4.8:1.

The films of Examples 134 and 135 were mechanically fastened as cladding to separate optical fibers, using a silica grease to eliminate the fiber-air interface. The experimental set-up is depicted schematically in FIG. 8. The fibers were then connected to a 60 watt xenon metal halide short arc lamp obtained from General Electric Company, Danbury, CT. The optical fibers had a thickness of 1.2 cm and consisted of a low Tg acrylic polymer.

When the lamp was turned on, the two samples became illuminated and produced diffusely scattered light. When the two film samples were viewed through a polarizing film at an orientation perpendicular to one plane of polarization, both samples appeared substantially darkened. However, when the polarizing film was rotated 90° in the same plane, both samples appeared diffusely bright, indicating that the transmission of light through the films was polarization specific.

The effect of capping the ends of the fibers was also investigated. When the ends were reflectively capped so that a portion of the light escaping from the ends of the fibers was reflected back into the fibers, the intensity of light produced by the films increased. This is consistent with the creation of a light cavity in which light of the non-extracted polarization undergoes further reflections within the optical fiber until it is converted, by degrees, into the extracted polarization.

With the light within the fiber being unable to exit the fiber except through the extractor, the extraction efficiency increased. In addition, polarization conversion of the light interacting with the fiber/air interface caused a greater portion of light to be extracted from the fiber in the desired polarization.

EXAMPLE 136

The following example illustrates the increase in gain achievable at non-normal incident angles with the optical films of the present invention.

A three layer film was made in accordance with Example 4. The core layer consisted of 70% PEN whose instrinsic viscosity was 0.48 (measured in 60% phenol, 40% dichlorobenzene) and 30% sPS 200-8. Each skin consisted of 100% coPEN and comprised about 17% of the total thickness of the cast film.

The coPEN was a copolymer of 70 mole % naphthalene dicarboxylate and 30 mole % dimethyl isophthalate. The viscosity of the coPEN was not measured.

The cast film was oriented in a manner consistent with Example 1. The stretching was accomplished at 5.5 meters per minute (18 feet per minute) with an output width of 141 cm (55.5 inches). The stretch temperature was 154°C. The heat set temperature was 164°C. The resultant film was 128 micrometers thick.

A Sharp C12P backlight was placed against the one face of a standard dichroic polarizer. The intensity of the light radiating from the backlight/polarizer assembly was measured using a Photo research PR650 Spectra Colorimeter. The backlight/polarizer assembly is oriented relative to the detector of the PR650 prior to the start of the measurement such that the plane containing the arc swept by the detector arm also contains the axis of high transmission for the polarizer. The detector arm is swept plus and minus 60 degrees about a direction perpendicular to the backlight/polarizer assembly. A second intensity measurement was made with piece of film 23 cm square placed between the backlight and the polarizer such that the perpendicular transmission axis of the film was coincident with the high transmission direction of the polarizer. The ratio of the two intensities for each angular position with the optical film in place to that without is reported as the Relative Gain.

The data for Example 136 is shown in Figure 9A. The average relative gain at the angles plus and minus 60 degrees from the normal was 1.45. This data demonstrates that the relative gain for the film of Example 136 increases at non-normal incident angles, particularly for angles from 30° to 60° away from normal incidence.

COMPARATIVE EXAMPLE 1

The following example illustrates the decrease in gain at non-normal incident angles for a typical commercially available optical film.

A piece of microreplicated brightness enhancement film from Sekisui W518 (Osaka, Japan) was measured using the Eldim 120D as described in Example 136. The ratio of the intensities for each angular position with the Sekisui W518 film in place to that without the Sekisui film is shown as Figure 9B. The average relative gain at the angles plus and minus 60 degrees from the normal was 0.65, indicating that the gain for the film peaks at normal incidence and declines for all angles away from normal incidence.

As demonstrated by Example 136 and Comparative Example 1, films can be made in accordance with the present invention in which the relative gain increases at non-normal incident angles, particularly for angles from 30° to 60° away from normal incidence. By contrast, the relative gain for commercially available optical films typically peaks at normal incidence and declines for all angles away from normal incidence. This feature of the films of the present invention make them particularly advantageous for use in applications such as brightness enhancement films for large displays, where one will likely view the display across a wide range of angles.

EXAMPLES 137 - 150

The following examples further illustrate the increase in gain at non-normal angles of incidence achieved with the films of the present invention.

A series of examples were made in a manner similar to Example 136, except that material and process changes were made as indicated. In some of the

examples, Irganox™ 1425 antioxidant (available from Ciba Geigy) and/or Dylark™ 332-80 (available from NOVA Chemicals) were added. The average relative gain for the angles plus and minus 60 degrees from the normal as well as the relative gain at normal incidence (0 degrees) are reported in Table 6.

TABLE 6

Ex.	sPS	% Irganox 1425	% Dylark	Stretch Temp.	Heat Set Temp.	Relative Gain (0°)	Relative Gain (+/- 60°)
137	30%, 200-8	0	0	160	164	1.18	1.40
138	30%, 200-8	0	0	154	199	1.21	1.48
139	30%, 200-8	0.5	2	154	199	1.20	1.46
140	30%, 200-8	0	2	154	199	1.18	1.47
141	15%, 200-8	0.5	0	154	199	1.15	1.48
142	15%, 200-8	0.5	0	154	199	1.21	1.47
143	30%, 200-4	0	0	154	199	1.16	1.47
144	30%, 200-4	0.5	0	154	199	1.29	1.47
145	30%, 290-8	0.5	0	154	199	1.06	1.35
146	30%, 290-8	0.5	2	154	199	1.13	1.43
147	30%, 200-8	0.5	2	154	164	1.21	1.47
148	30%, 200-8	0	2	154	164	1.17	1.47
149	15%, 200-8	0.5	0	154	164	1.21	1.47
150	30%, 200-4	0	0	154	164	1.23	1.38

The preceding description of the present invention is merely illustrative, and is not intended to be limiting. Therefore, the scope of the present invention should be construed solely by reference to the appended claims.

PCT/US 97/03130
Minnesota Mining and Manufacturing Co.
Our Ref.: B 2592 PCT

Feb. 13, 1998
VOSSIUS & PARTNER GbR
PATENTANWALTE
EUROPEAN PATENT ATTORNEYS
Siebertstr. 4 - 81675 München

What is claimed is:

1. An optical device comprising ~~In combination with~~ a light guide, a light extractor, and comprising:

a polymeric first phase (12); and

a second phase (14), disposed within said first phase, which is discontinuous along at least two of any three mutually perpendicular axes;

wherein said first and second phases have indices of refraction which differ along a first axis by more than about 0.05, and which differ along a second axis orthogonal to said first axis by less than about 0.05.

2. The ~~combination~~ device of claim 1, wherein said first phase (12) has a birefringence of at least about 0.1.

3. The ~~combination~~ device of claim 1, wherein said first phase (12) has a birefringence of at least about 0.15.

4. The ~~combination~~ device of claim 1, wherein said first phase (12) has a birefringence of at least about 0.2.

5. The ~~combination~~ device of claim 1, wherein said second phase (14) has a birefringence of less than about 0.02.

6. The ~~combination~~ device of claim 1, wherein said second phase (14) has a birefringence of less than about 0.01.

7. The ~~combination~~ device of claim 1, wherein said second phase (14) has an index of refraction which differs from said first phase by more than about 0.1 along said first axis.

< as an optical body (10), said light extractor >

AMENDED SHEET

8. The ~~combination~~ device of claim 1, wherein said second phase (14) has an index of refraction which differs from said first phase by more than about 0.15 along said first axis.

9. The ~~combination~~ device of claim 1, wherein said second phase (14) has an index of refraction which differs from said first phase by more than about 0.2 along said first axis.

10. The ~~combination~~ device of claim 1, wherein said second phase (14) has an index of refraction which differs from said first phase by less than about 0.03 along said second axis.

11. The ~~combination~~ device of claim 1, wherein said second phase (14) has an index of refraction which differs from said first phase by less than about 0.01 along said second axis.

12. The ~~combination~~ device of claim 1, wherein at least about 5% of light ~~polarized orthogonal to~~ of a first polarization ~~of light~~ is diffusely extracted by said extractor (10).

13. The ~~combination~~ device of claim 1, wherein at least about 50% of light ~~polarized orthogonal to~~ of a first polarization ~~of light~~ is diffusely extracted by said extractor (10).

14. The ~~combination~~ device of claim 1, wherein at least about 70% of light ~~polarized orthogonal to~~ of a first polarization ~~of light~~ is diffusely extracted by said extractor (10).

15. The ~~combination~~ device of claim 1, wherein said first phase (12) comprises a thermoplastic resin.

16. The ~~combination~~ device of claim 15, wherein said first phase (12) comprises a polymer derived from naphthalene dicarboxylic acid.

AMENDED SHEET

17. The ~~combination~~ device of claim 16, wherein said polymer is a copolymer of at least one diol and a monomer selected from the group consisting of naphthalene dicarboxylic acid, isophthalic acid, dimethyl isophthalic acid, terephthalic acid, and dimethyl terephthalic acid.

18. The ~~combination~~ device of claim 1, wherein said second phase (14) is a syndiotactic vinyl aromatic polymer derived from a vinyl aromatic monomer.

19. The ~~combination~~ device of claim 16, wherein said second phase (14) comprises interpolymerized units of syndiotactic polystyrene.

20. The ~~combination~~ device of claim 1, wherein said first phase (12) comprises a polymer derived from naphthalene dicarboxylic acid and said second phase (14) comprises syndiotactic polystyrene.

21. The ~~combination~~ device of claim 1, wherein said extractor (10) is stretched to a sufficient stretch ratio, and at a sufficient temperature, so that it extracts predominantly only one polarization of light.

22. The ~~combination~~ device of claim 1, wherein said second phase (14) comprises a plurality of elongated masses whose major axes are substantially aligned along a common axis.

23.. The ~~combination~~ device of claim 1, wherein said second phase (14) is present in an amount of less than about 5% by volume relative to said first phase (12).

~~24. The combination of claim 1, wherein said second phase is discontinuous along at least two of any three mutually perpendicular axes.~~

24 ~~25.~~ The ~~combination~~ device of claim 1, wherein said disperse phase is discontinuous along any three mutually perpendicular axes.

AMENDED SHEET

25 ~~26~~. The device ~~combination~~ of claim 1, wherein the extracted electromagnetic radiation is distributed anisotropically about the axis of specular transmission.

26 ~~27~~. The device ~~combination~~ of claim 1, wherein said extractor is stretched in at least one direction, wherein at least about 40% of light ~~polarized orthogonal to~~ of a first polarization ~~of light~~ is diffusely transmitted through said optical body (10), and wherein said diffusely transmitted rays are distributed primarily along or near the surface of a cone whose surface contains the spectrally transmitted direction and whose axis is centered on the stretch direction.

27 ~~28~~. The device ~~combination~~ of claim 1, wherein said second phase (14) comprises elongated inclusions whose axes of elongation are aligned in a common direction, wherein said extractor (10) is stretched in at least one direction, and wherein the diffusely transmitted portion of at least one polarization of electromagnetic radiation is distributed primarily along or near the surface of a cone whose axis is centered on the axis of elongation direction and whose surface contains the diffusely transmitted direction.

28 ~~29~~. An optical device comprising ~~In combination with~~ a light guide, and a light extractor, said light extractor comprising a multilayer film (20), wherein at least one layer in said film comprises:

a continuous phase;

a disperse phase disposed throughout said continuous phase, said disperse phase having an index of refraction which differs from the index of refraction of said continuous phase by greater than about 0.05 along a first axis; and

a dichroic dye.

AMENDED SHEET

29 ~~30~~. The ~~combination~~ device of claim ~~29~~ 28, wherein the disperse phase has an index of refraction that differs from the index of refraction of said continuous phase by less than about 0.05 along a second axis orthogonal to said first axis.

30 ~~31~~. The ~~combination~~ device of claim ~~29~~ 28, wherein said dichroic dye is disposed within said disperse phase.

31 ~~32~~. ~~In combination with~~ An optical device comprising a light guide, a light extractor and comprising: <p. 86>

a first phase (12) having a birefringence of at least about 0.05; and

a second phase (14), disposed within said first phase;

wherein the absolute value of the difference in index of refraction of said first and second phases is Δn_1 along a first axis and Δn_2 along a second axis orthogonal to said first axis, wherein the absolute value of the difference between Δn_1 and Δn_2 is at least about 0.05, and wherein the diffuse reflectivity of said first and second phases taken together along at least one axis for at least one polarization of electromagnetic radiation is at least about 30%.

32 ~~33~~. The ~~combination~~ device of claim ~~32~~ 31, wherein wherein the absolute value of the difference between Δn_1 and Δn_2 is at least about 0.1.

33 ~~34~~. The ~~combination~~ device of claim ~~32~~ 31, wherein said first phase (12) has a larger birefringence than said second phase (14).

34 ~~35~~. The ~~combination~~ device of claim ~~34~~ 33, wherein the birefringence of said first phase (12) is at least 0.02 greater than the birefringence of said second phase (14).

35 ~~36~~. The ~~combination~~ device of claim ~~34~~ 33, wherein the birefringence of said first phase (12) is at least 0.05 greater than the birefringence of said second phase (14).

AMENDED SHEET

36 ~~37.~~ The device of claim 31, said ~~In combination with a light guide, a light extractor comprising an~~ optical body having a plurality of layers (20), wherein at least one of said plurality of layers comprises:

said ~~a~~ first phase ~~having a birefringence of at least about 0.05~~; and

said ~~a~~ second phase which is discontinuous along at least two of any three mutually orthogonal axes;

~~wherein the absolute value of the difference in index of refraction of said first and~~ second phases is Δn_1 along a first axis and Δn_2 along a second ~~axis~~ orthogonal to said first axis, wherein the absolute value of the ~~difference~~ between Δn_1 and Δn_2 is at least about 0.05, and wherein ~~the~~ diffuse reflectivity of said first and second phases taken ~~together~~ along at least one axis for at least one polarization of ~~electromagnetic radiation is at least about 30%.~~

37 ~~38.~~ The ~~An optical~~ device of claim 1, comprising:

a light source;

said ~~a~~ light guide; and

said ~~a~~ light extractor (10) disposed on said light guide;

~~wherein said light extractor comprises a polymeric first phase and a second phase,~~ disposed within said first phase, said second phase being ~~discontinuous~~ along at least two of any three mutually perpendicular ~~axes,~~ and wherein said first and second phases have indices of ~~refraction~~ which differ along a first axis by more than about 0.05 ~~and~~ which differ along a second axis orthogonal to said first axis ~~by less than about 0.05.~~

38 ~~39.~~ The ~~optical~~ device of claim 37 ~~38~~, wherein said light extractor (10) comprises a uniaxially oriented optical film.

AMENDED SHEET

39 ~~40.~~ The optical device of claim 37 ~~38~~, wherein said first phase (12) comprises a polyester and said second phase (14) comprises syndiotactic polystyrene.

40. A method for using a diffuse reflective polarizer, as an extractor, comprising the steps:

providing a first resin, whose degree of birefringence can be altered by application of a force field, as through dimensional orientation or an applied electric field, such that the resulting resin material has, for at least two orthogonal directions, an index of refraction difference of more than about 0.05;

providing a second resin, dispersed within the first resin; and

applying said force field to the composite of both resins such that the indices of the two resins are approximately matched to within less than about 0.05 in one of two directions, and the index difference between first and second resins in the other of two directions is greater than about 0.05.

41. A method of claim 40 wherein the second resin is dispersed in the first resin after imposition of the force field and subsequent alteration of the birefringence of the first resin.

AMENDED SHEET

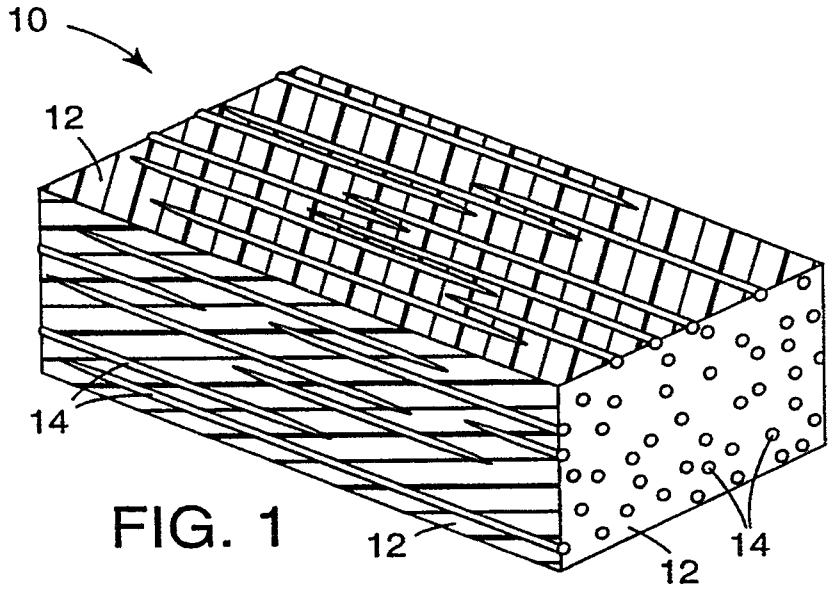

FIG. 1

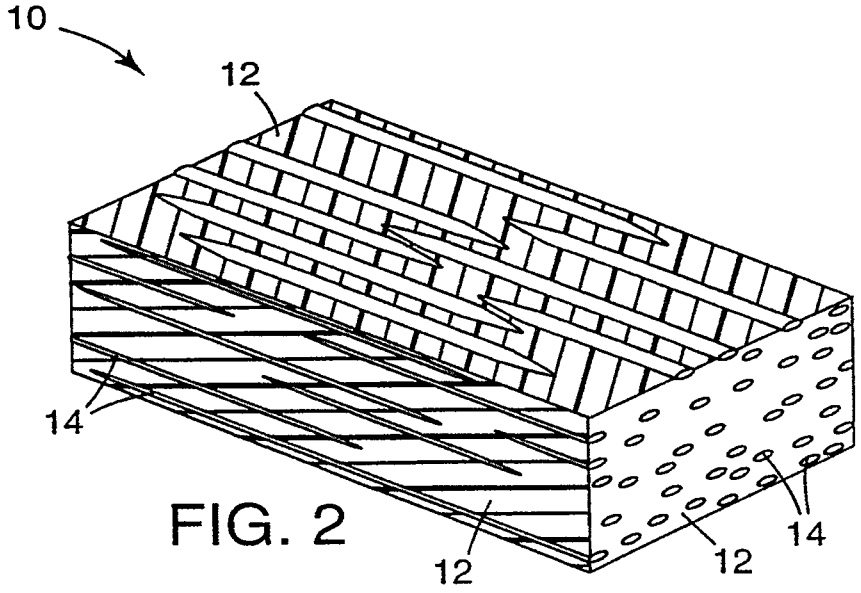

FIG. 2

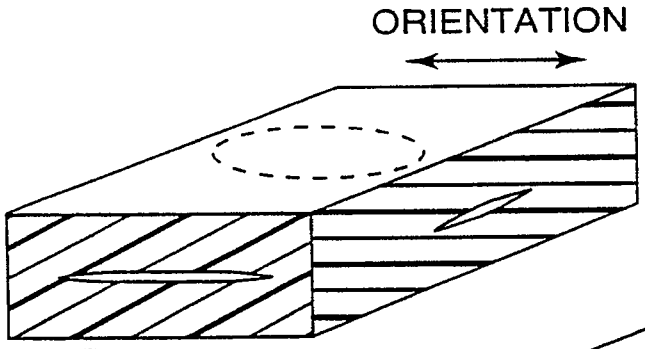

FIG. 3a

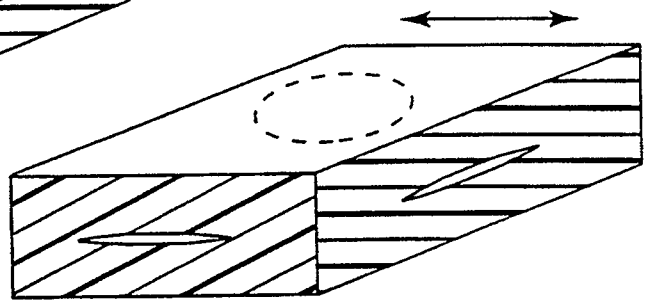

FIG. 3b

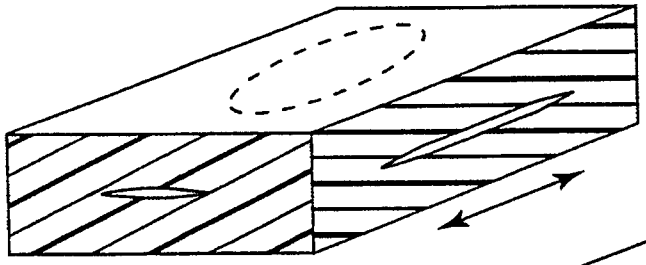

FIG. 3c

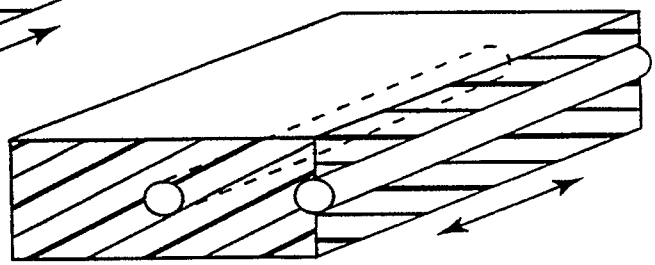

FIG. 3d

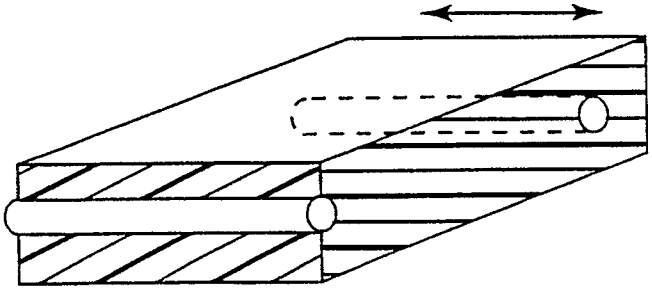

FIG. 3e

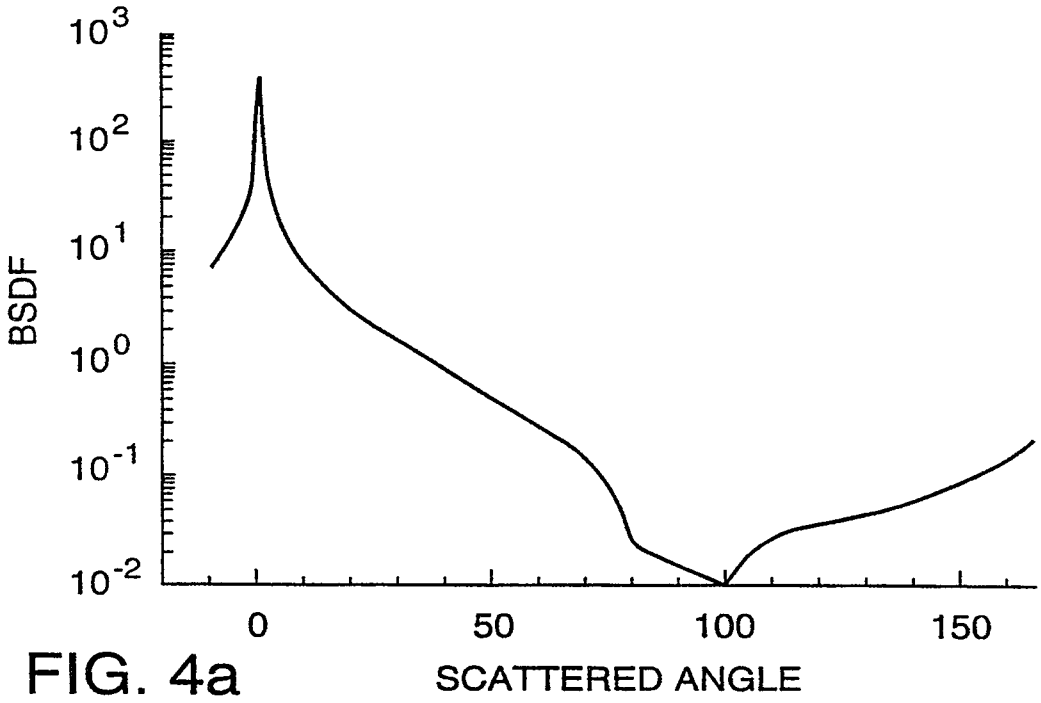
10^3
10^2
10^1
10^0
10^{-1}
10^{-2}
BSDF
0
50
100
150
SCATTERED ANGLE

FIG. 4a

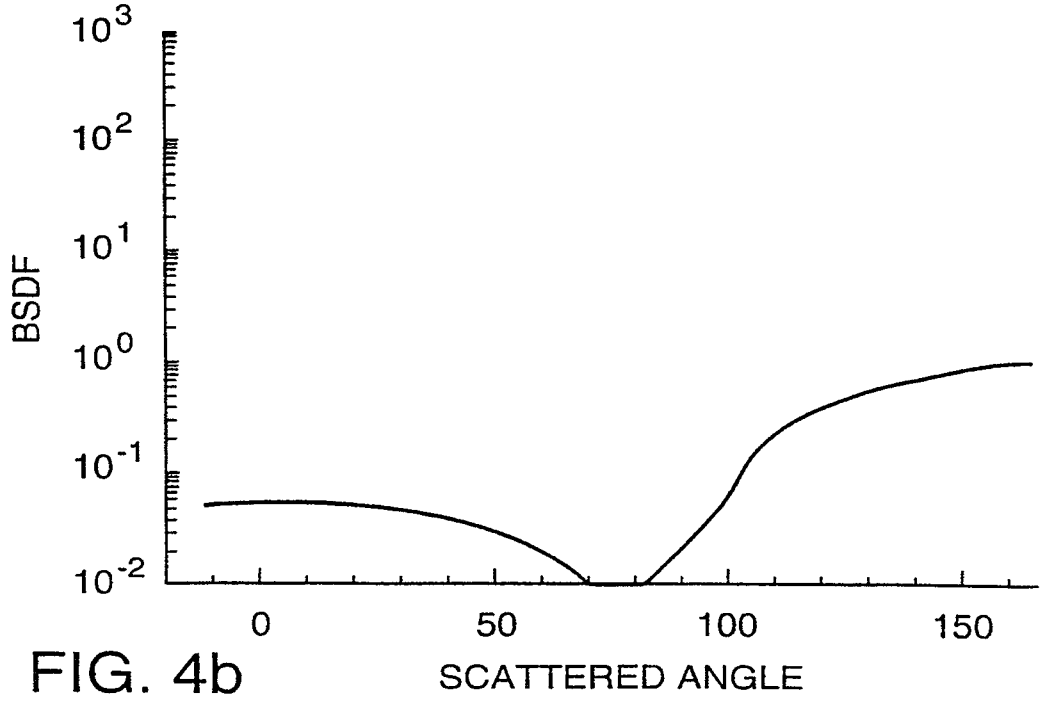
10^3
10^2
10^1
10^0
10^{-1}
10^{-2}
BSDF
0
50
100
150
SCATTERED ANGLE

FIG. 4b

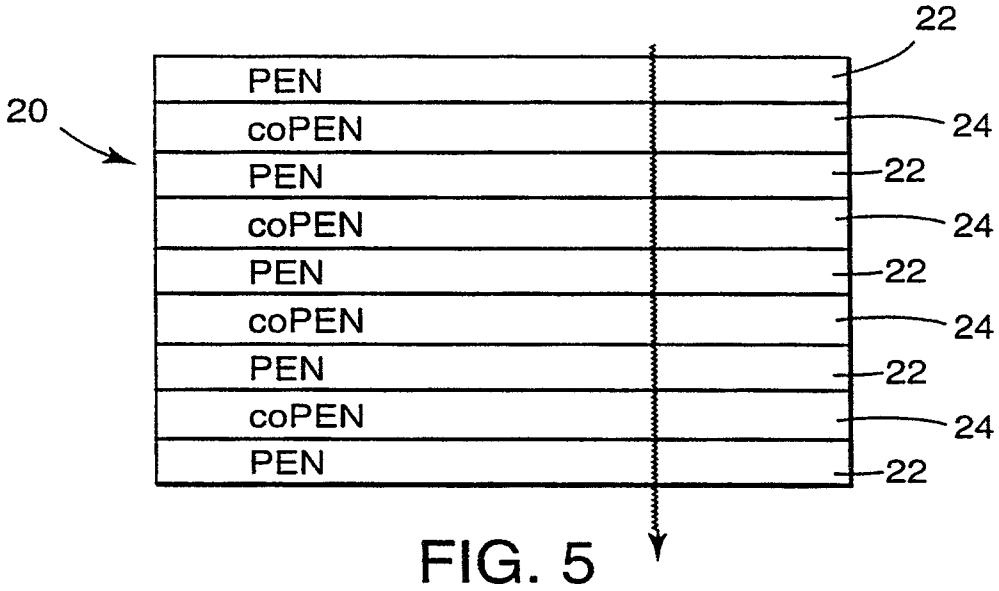
22
20
PEN
coPEN
PEN
coPEN
PEN
coPEN
PEN
coPEN
PEN
24
22
24
22
24
22
24
22

FIG. 5

FIG.6A

FIG.6B

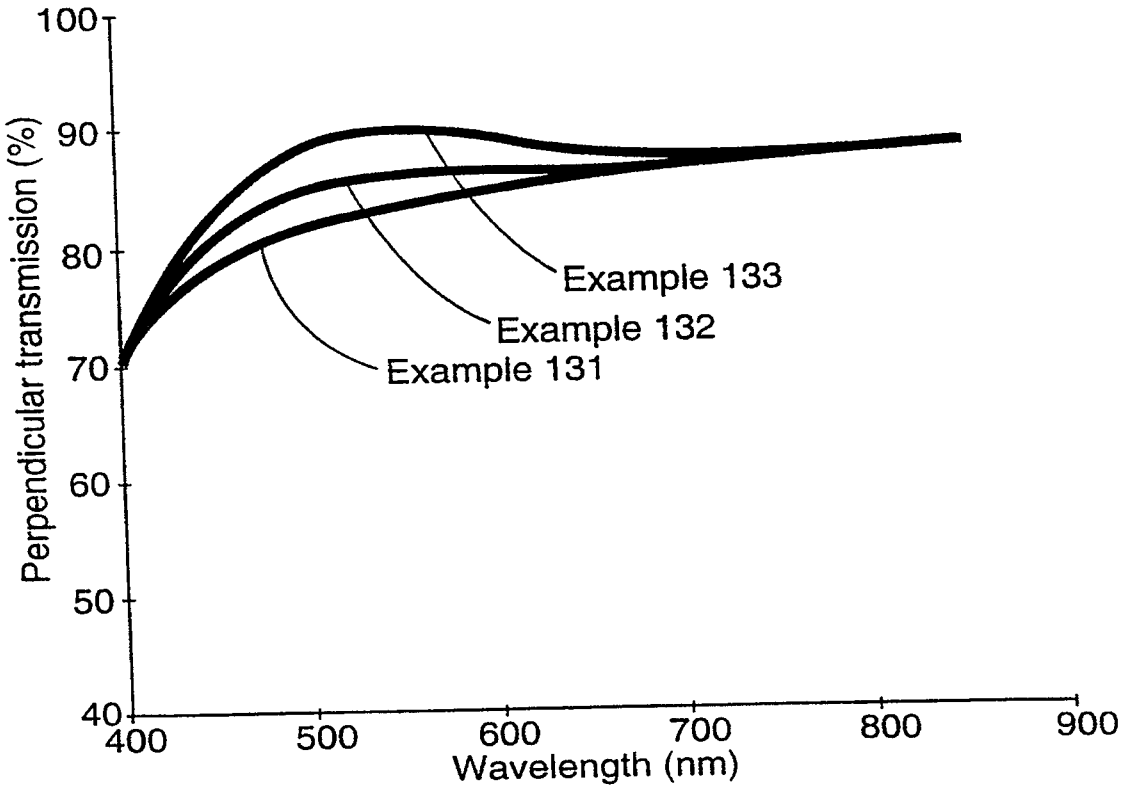
100
90
80
70
60
50
40
Perpendicular transmission (%)
400
500
600
700
800
900
Wavelength (nm)
Example 133
Example 132
Example 131

FIG. 7

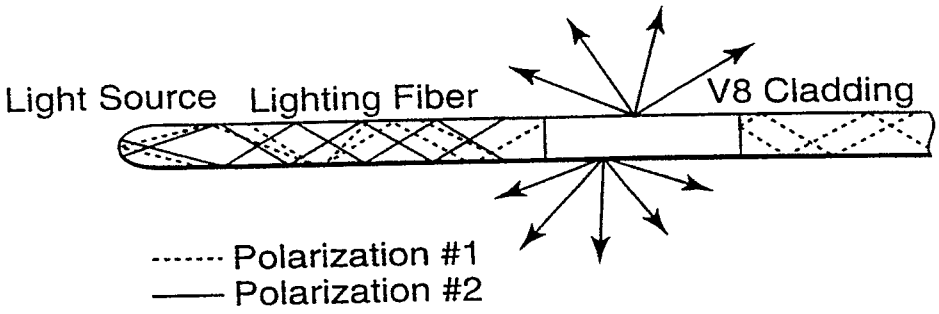
Light Source
Lighting Fiber
V8 Cladding
Polarization #1
Polarization #2

FIG. 8

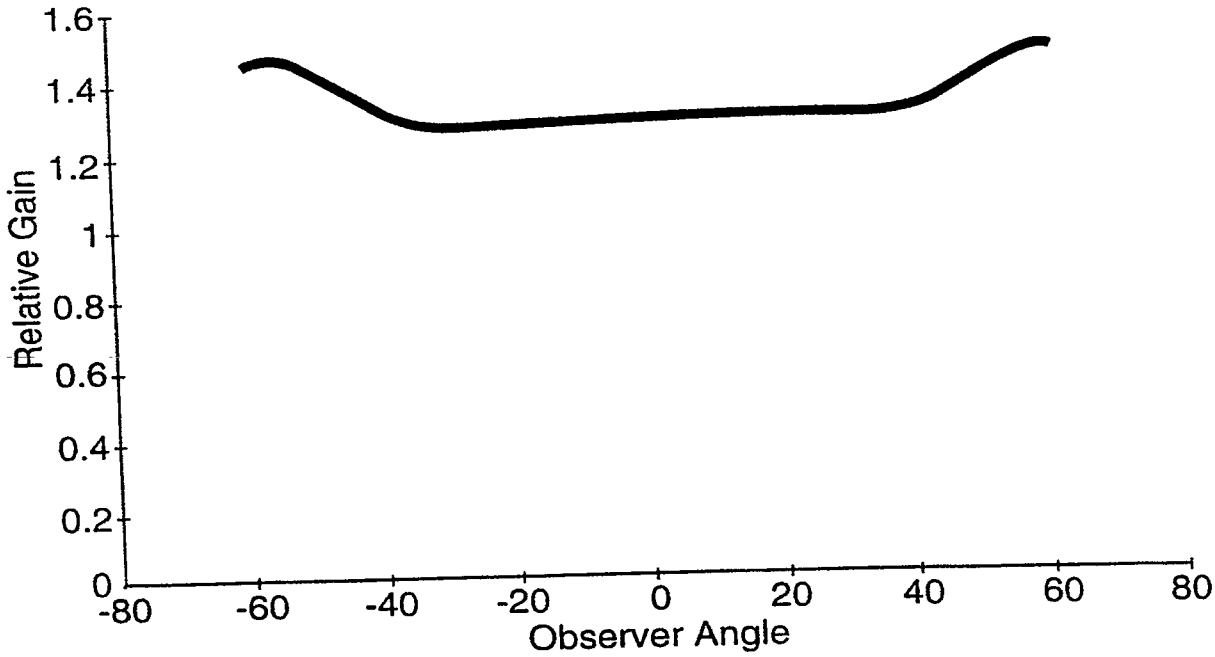
1.6
1.4
1.2
1
0.8
0.6
0.4
0.2
0
Relative Gain
-80
-60
-40
-20
0
20
40
60
80
Observer Angle

FIG. 9A

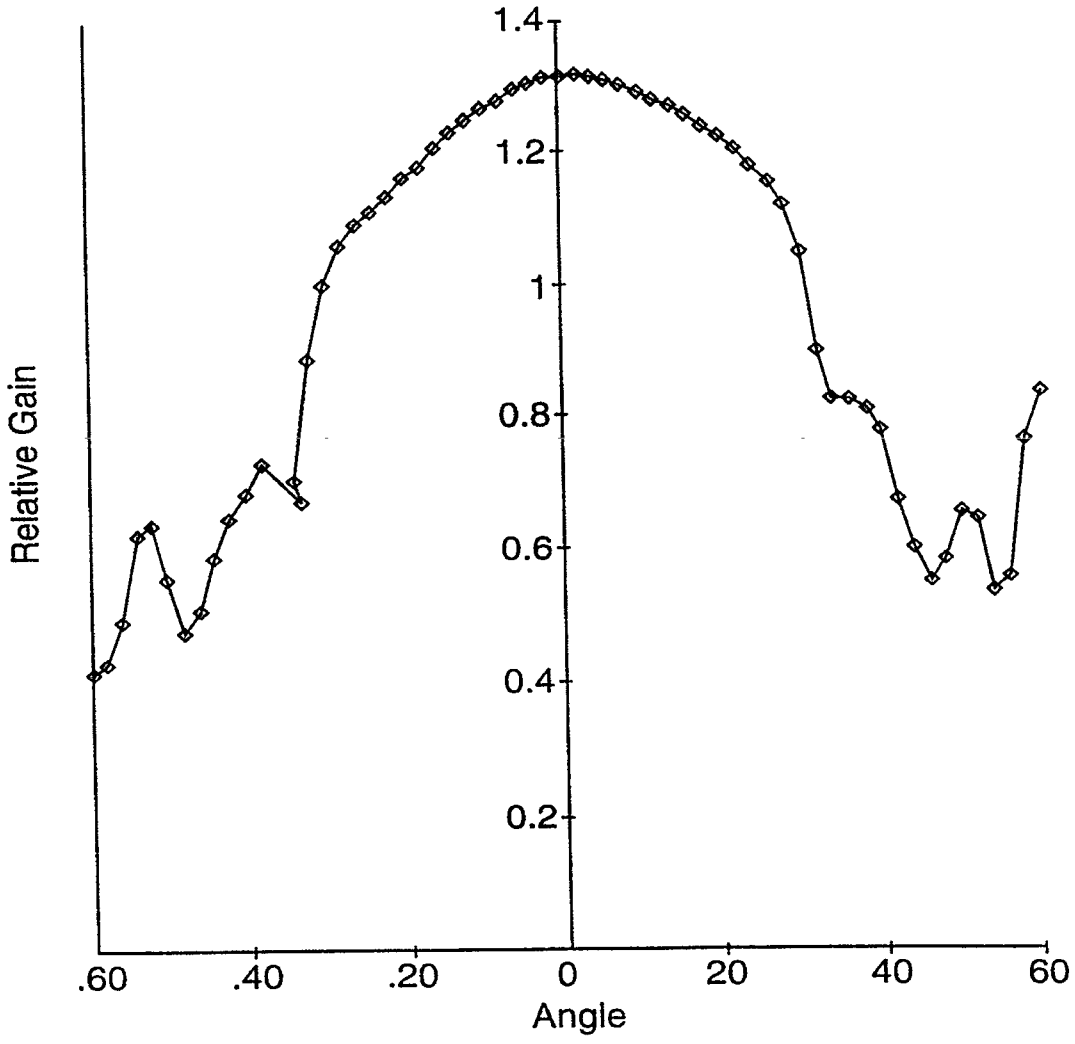

FIG. 9B

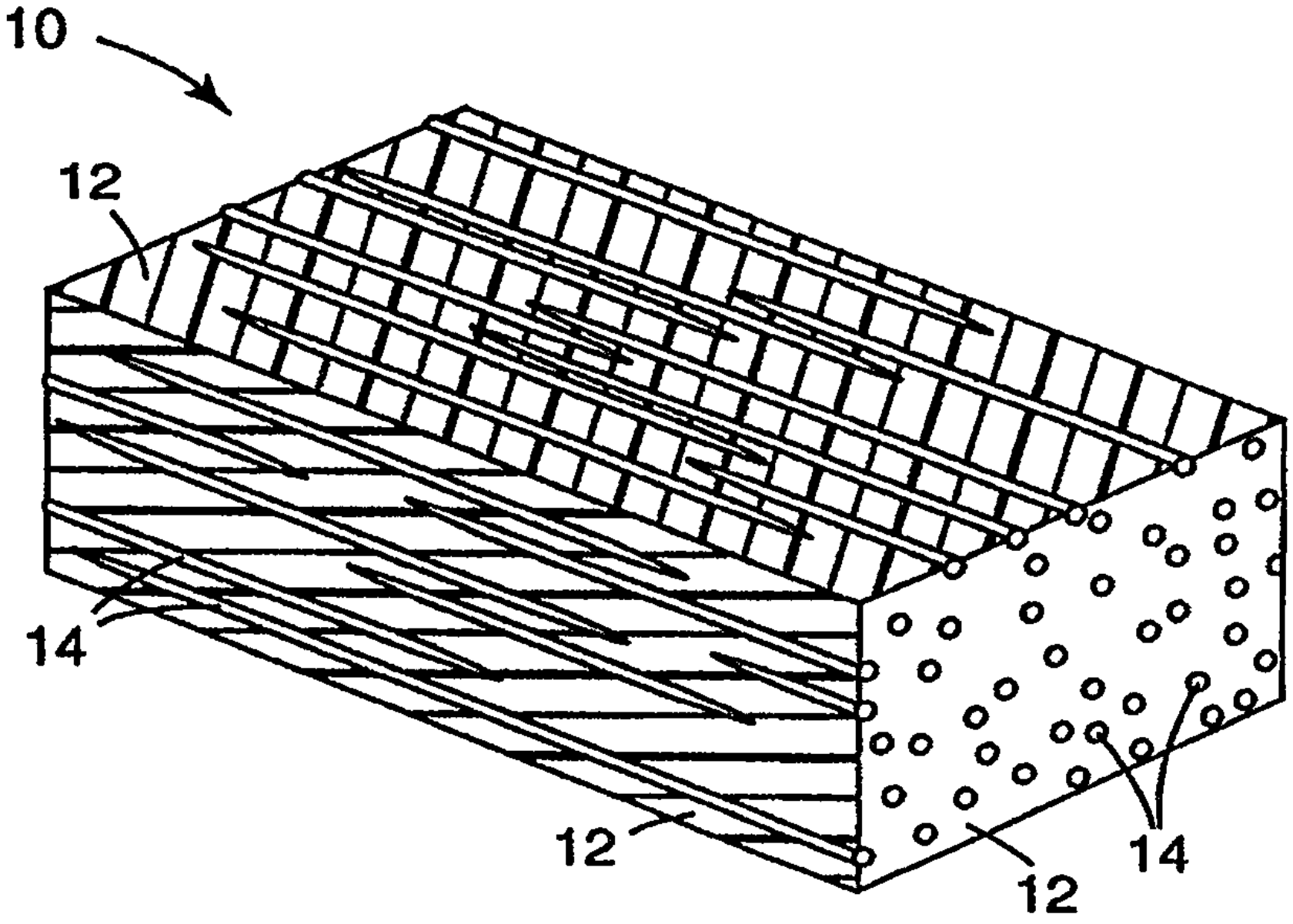
10
12
14
12
12
14