(No Model.) 6 Sheets—Sheet 1.

McCLINTOCK YOUNG.

BRUSH MACHINE.

No. 456,610. Patented July 28, 1891.

Fig. 1.

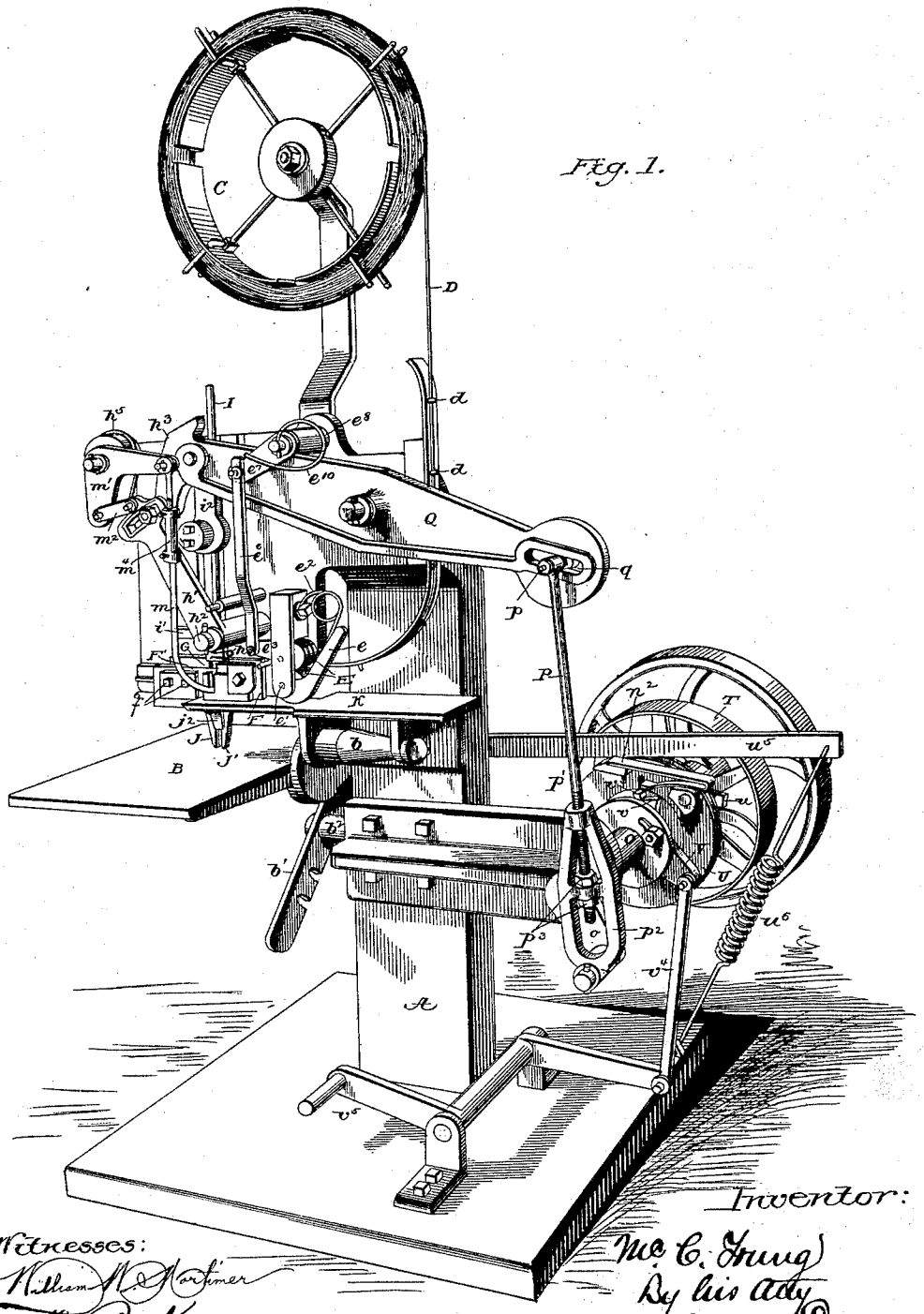
C
D
d
d
I
Q
q
P
P
P'
A
B
K
F
F'
J
J'
T
b
b'
b'
a
a
a

(No Model.) 6 Sheets—Sheet 2.

McCLINTOCK YOUNG.

BRUSH MACHINE.

No. 456,610. Patented July 28, 1891.

Fig. 2.

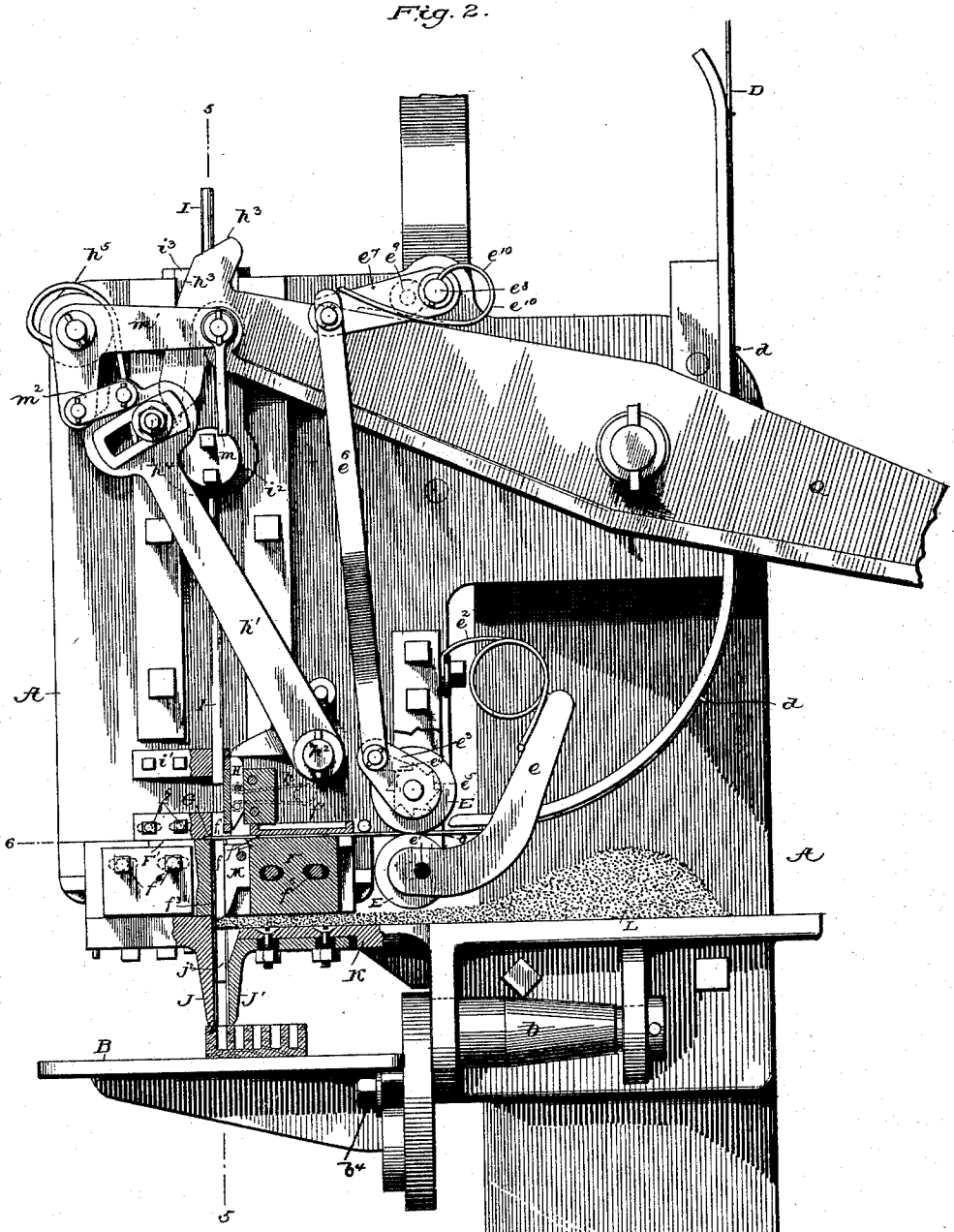

Witnesses:
M. M. Martin
M. R. Kennedy

Inventor:
McC. Young
by his Atty
Phil T. Dodge

THE NORRIS PETERS CO., PHOTO-LITHO., WASHINGTON, D. C.

(No Model.) 6 Sheets—Sheet 3.

McCLINTOCK YOUNG.

BRUSH MACHINE.

No. 456,610. Patented July 28, 1891.

Fig. 3.

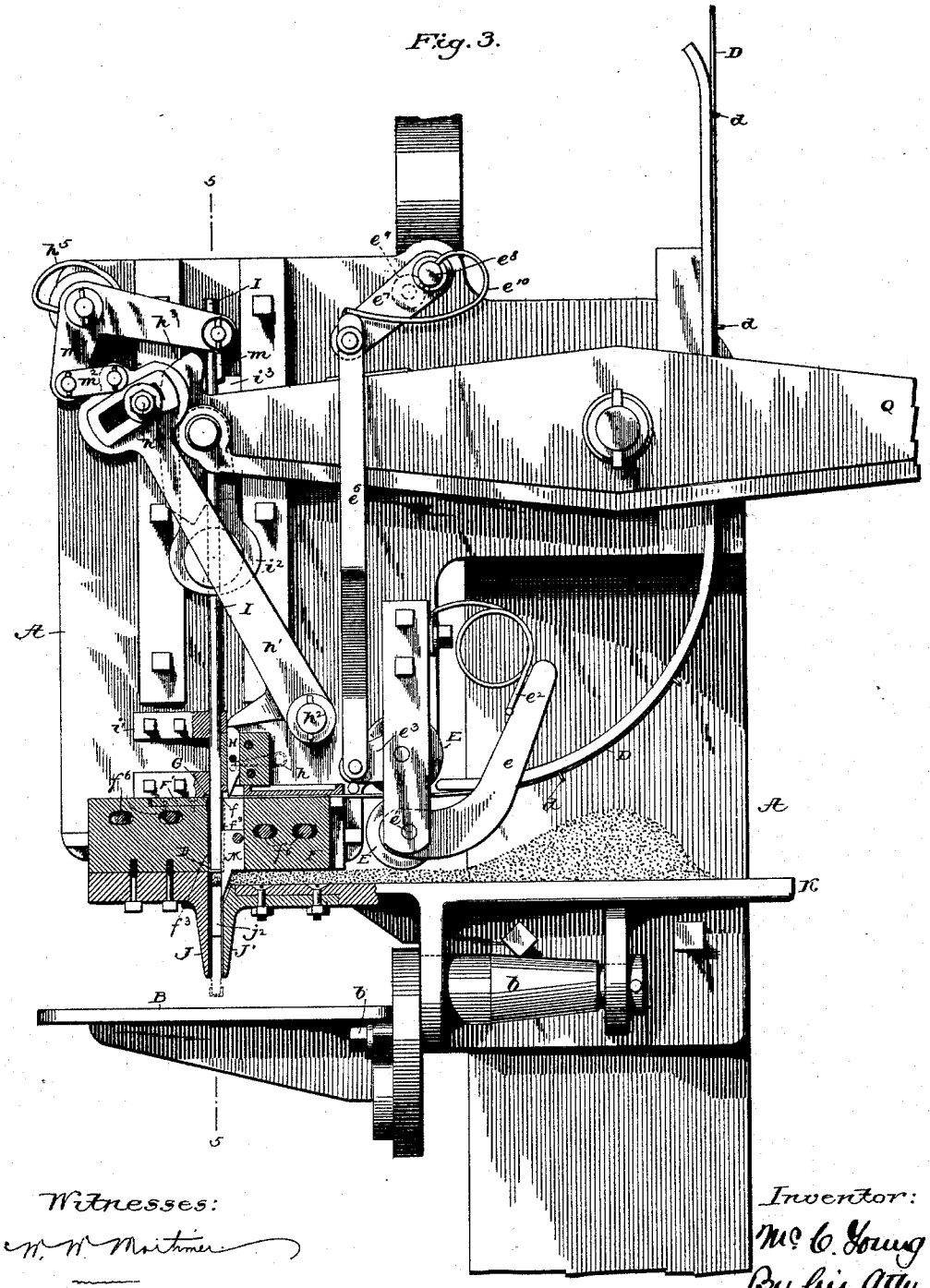

Witnesses:

W. W. Mortimer

W. A. Kennedy

Inventor:

Mc C. Young

By his Atty

Chas. F. Dodge

THE NORRIS PETERS CO., PHOTO-LITHO., WASHINGTON, D. C.

(No Model.) 6 Sheets—Sheet 4.

McCLINTOCK YOUNG.

BRUSH MACHINE.

No. 456,610. Patented July 28, 1891.

Fig. 4.

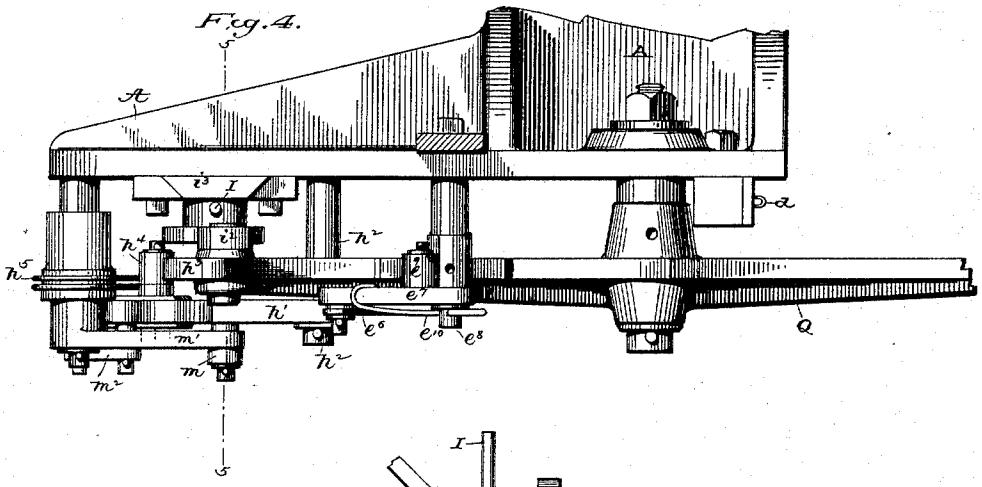

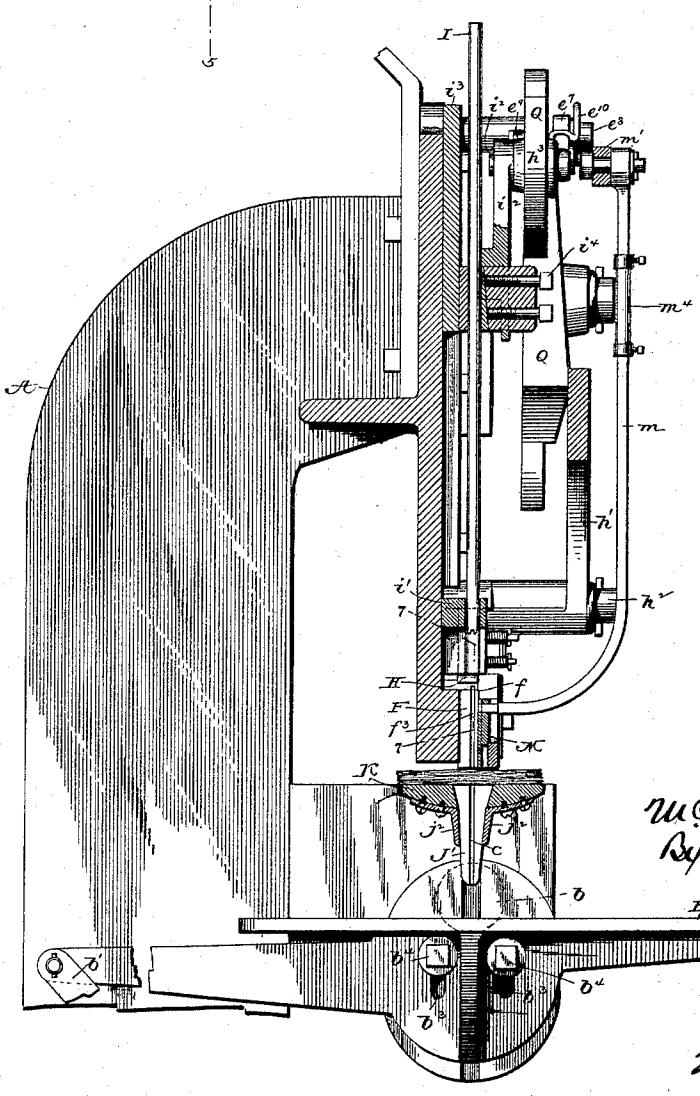

Fig. 5.
on line 5-5

Inventor:
Wm. C. Young
By his atty
Phil. T. Dodge

Witnesses:
W. M. Mortimer
W. A. Kennedy

THE NORRIS PETERS CO., PHOTO-LITHO., WASHINGTON, D. C.

(No Model.)

6 Sheets—Sheet 5.

McCLINTOCK YOUNG.

BRUSH MACHINE.

No. 456,610. Patented July 28, 1891.

Fig. 6.
on line 6-6

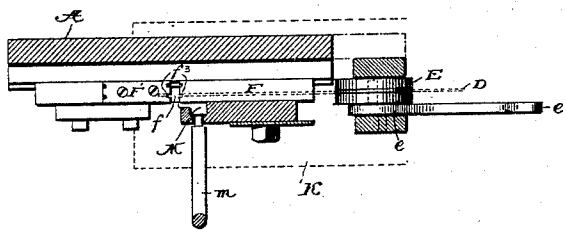

Fig. 7.
on line 7-7

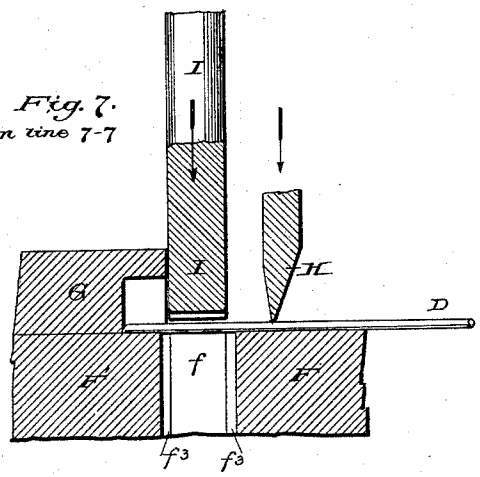

Fig. 9.
on line 7-7

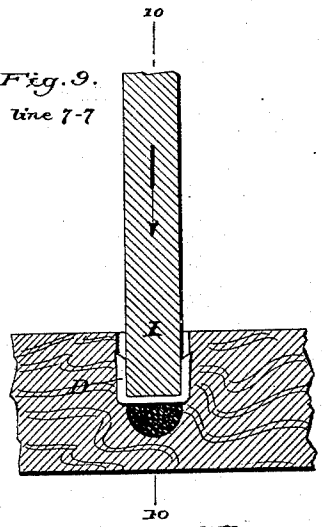

Fig. 8.
on line 7-7

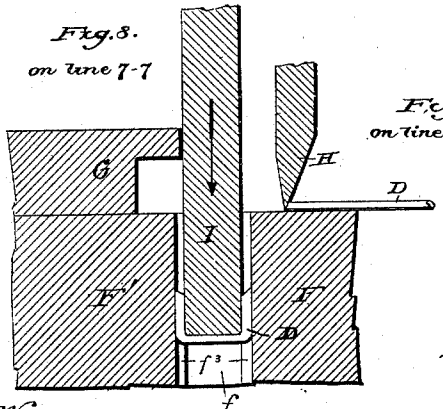

Fig. 10.
on line 10-10

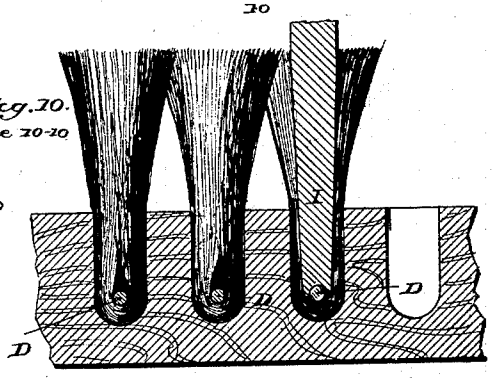

Witnesses:

William W. Mortimer

W. A. Kennedy

Inventor:

McC. Young

By his Atty

Phil. T. Dodge

THE NORRIS PETERS CO., PHOTO-LITHO., WASHINGTON, D. C.

(No Model.) 6 Sheets—Sheet 6.

McCLINTOCK YOUNG.

BRUSH MACHINE.

No. 456,610. Patented July 28, 1891.

Fig. 11.

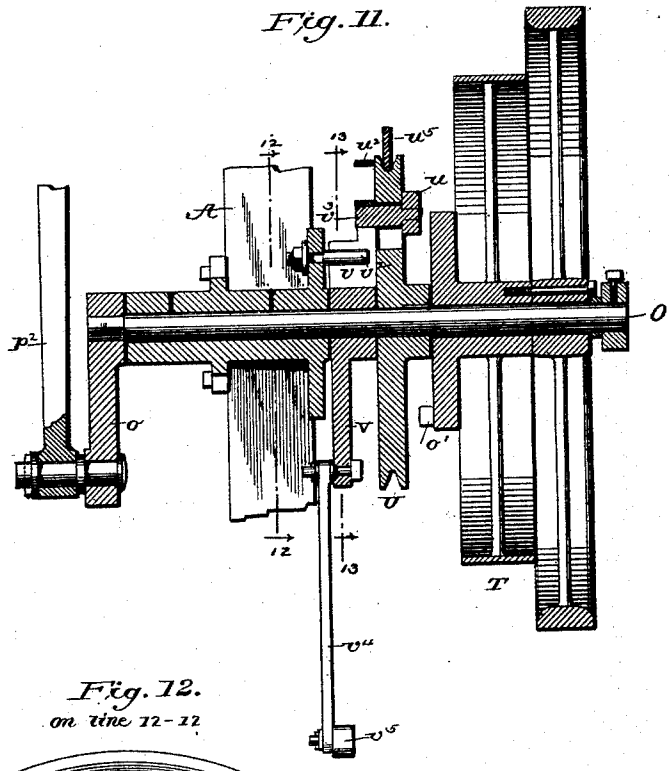

Fig. 12.
on line 12-12

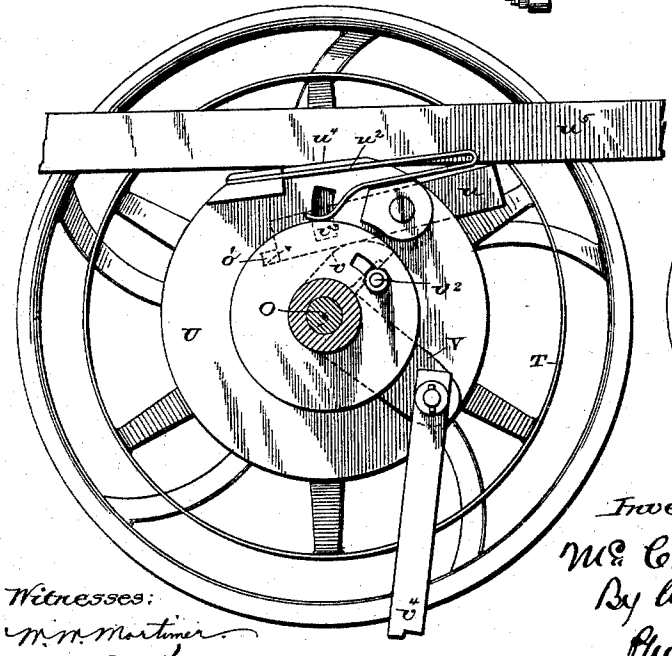

Fig. 13.
on line 13-13

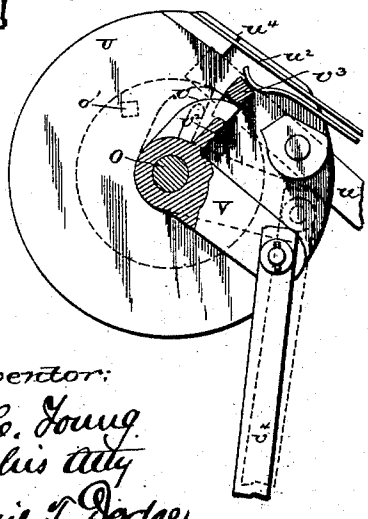

Witnesses:
M. M. Mortimer
W. A. Kennedy.

Inventor:
McC. Young
By his Atty
Chas. F. Dodge

THE NORRIS PETERS CO., PHOTO-LITHO., WASHINGTON, D. C.

UNITED STATES PATENT OFFICE.

McCLINTOCK YOUNG, OF FREDERICK, MARYLAND.

BRUSH-MACHINE.

SPECIFICATION forming part of Letters Patent No. 456,610, dated July 28, 1891.

Application filed August 1, 1890. Serial No. 360,626. (No model.)

To all whom it may concern:

Be it known that I, McCLINTOCK YOUNG, of Frederick, in the county of Frederick and State of Maryland, have invented certain Improvements in Brush-Machines, of which the following is a specification.

The machine forming the subject of the present invention is intended to sever wire into short lengths, bend these lengths into U-shaped staples or fasteners, and drive these fasteners one at a time in such manner that they will fold or double the successive tufts, carry the same into holes in the brush block or body, and secure them in place.

The machine embraces as its leading features wire feeding and cutting devices, a reciprocating finger, and guides between which it passes for bending the wire and guiding the same in its passage into the block or body.

I ordinarily construct the machines so that all the operations incident to the forming and driving of a single fastener are performed at each revolution of the driving-wheel and connect with the latter an automatic clutch by which the machine is stopped at the end of each revolution to be again brought into action at the will of the operator.

In the accompanying drawings, Figure 1 is a perspective view of my machine complete. Fig. 2 is a front elevation of the same as it appears when the parts are at rest, portions being broken away in order to show the internal construction. Fig. 3 is a similar view showing the parts as they appear with a fastener formed and partly driven. Fig. 4 is a top plan view of the parts shown in Figs. 2 and 3. Fig. 5 is a vertical cross-section on the line 5 5 of Figs. 2, 3, and 4. Fig. 6 is a horizontal section on the line 6 6 of Fig. 2. Fig. 7 is a vertical section on the line 7 7 of Fig. 5, showing the wire cutting and bending devices on an enlarged scale in the positions they occupy when at rest. Fig. 8 is a like view showing the parts as they appear after the cutting and bending of a staple or fastener before the latter has entered the block. Fig. 9 is a vertical section on the same line as Fig. 8, showing the manner in which the fastener is driven into the block at the close of the operation. Fig. 10 is a cross-section through a brush and through the finger on the line 10 10 of Fig. 9, illustrating the manner in which the fastener and tuft are driven home to their place in the block. Fig. 11 is a vertical axial section through the main driving-shaft and the various parts thereon. Fig. 12 is a section on the line 12 12 of Fig. 11, looking in the direction indicated by the arrow and showing more particularly the driving-clutch. Fig. 13 is a section on the line 13 13 of Fig. 11, looking in the direction indicated by the arrow.

In Figs. 2, 3, 4, and 5 the wire-reel and the driving mechanism are omitted.

Referring to the drawings, A represents the rigid frame or standard, which may be of any form adapted to sustain the operative parts hereinafter described.

B is a bed or table intended to give support to the previously-bored brush-blocks during the insertion of the tufts. This table is provided with and sustained by a horizontal journal b, seated in the main frame, so that the table may be inclined from the horizontal to permit the driving of tufts in inclined positions into the block. The table may be secured in any desired position by any suitable locking device; but I recommend as a simple contrivance for the purpose a link b', pivoted at one end to the table and notched at the opposite end, so that it may be locked upon a stud b^2, fixed to the frame.

In order that the machine may be adjusted to operate with blocks differing in thickness or in the depth of the tuft-receiving holes, the table is made vertically adjustable. This adjustment is preferably secured, as shown in Fig. 5, by providing the table with vertical slots b^3 and securing it to the end of its supporting-journal by bolts b^4, extended through the slots.

C represents a reel, which may be of any suitable construction, mounted on top of the main frame and carrying a coil of strong steel wire D. This wire is laid from the reel downward through suitable guides d, and thence between two horizontal feed-rolls E and E. The upper roll E is mounted on a fixed journal; but the lower roll is carried by a lever e, pivoted to the main frame at e' and acted upon by a spring e^2, which serves to urge the lower roll toward its companion, that the wire may be tightly grasped between them. As shown in Fig. 2, the journal of the

upper roll loosely supports a lever e^3, carrying a pawl e^4, which engages a ratchet-wheel e^5 on the roll, so that as the lever is vibrated by means hereinafter described it imparts an intermitting rotation to the roll and causes the wire to be advanced step by step. After passing between the rolls the wire passes over the top of a fixed supporting-block F and across an intervening space f to the upper surface of a fixed supporting-block F', where it abuts against a fixed overlying stop G, by which its further advance is prevented. During its advance over the top of the support F the wire is guided and prevented from buckling by an overlying fixed plate f'.

H represents a vertically-sliding knife guided in the main frame and having its lower end adapted to act upon the wire and sever the same at the right of the opening f at a point where it is sustained by the block F. The location of the knife is such that the severed length of wire projects equally to the right and left of the opening f, as shown in Figs. 2 and 7. The knife is held normally in an elevated position by a spring h, fixed to the frame and acting at one end on the knife. Its depression is effected by the end of an angular lever h', pivoted to the main frame at h^2 and operated by means hereinafter explained. The walls of the opening f are formed by the opposing vertical ends of the blocks F and F', each of which contains a vertical groove f^3, these grooves being designed to receive and guide the wire after it is bent into the form of a staple.

I represents a vertically-reciprocating driving-finger passing at its lower end through a guide-block i', so that when it descends its end will pass downward through the opening f, and in so doing act upon the severed length of wire and carry the same downward through opening f between the blocks F F', which act to bend the ends of the wire upward against the sides of the finger, thus converting the wire into a staple or fastening of U form, as plainly illustrated in Fig. 8.

J J' represent two rigid depending guide-fingers bolted, respectively, to the frame and to the block F' and terminating at such distance above the table as to admit of the brush-block being passed thereunder, as shown in Fig. 2. The inner vertical walls of these fingers form in effect downward continuations of the ends of the blocks F F' and are grooved like said blocks in their inner faces, so that as the staple is carried downward by the driving-finger I beyond the blocks F F' it will pass into the fingers J J' and be guided by the latter into the hole in the brush-block, the movement of the finger I being such that it forces the staple or fastening downward between and beyond the fingers J J' and to a suitable depth into the block.

K represents a horizontal bed or table formed upon or fixed to the main frame and extending horizontally to the left beneath the block F and at such distance therefrom as to afford a horizontal space or opening through which the bristles or fibers L, lying in a horizontal position, may be passed beneath the descending finger I. On reference to Figs. 2, 3, and 5, it will be observed that this passage for the bristles extends into or across the vertical opening f, so that the bristles laid transversely upon the table may be passed by hand under the block F and against the face of the block F', in order that they may underlie and be acted upon midway of their length by the downcoming staple and finger, so that these parts, in continuing their descent, will carry the fibers downward at the middle through the table and between the fingers J J' into the brush-block. The fibers which form the tuft are by this action folded or doubled upward astride of the finger I, as shown in Fig. 10, so that the staple is inclosed within the tuft and carried down therein bodily into the hole in the block, as shown in Figs. 9 and 10. Thus placed within the bight or fold of the tuft, it engages at its ends against the walls of the tuft-hole and retains the tuft firmly in place, in the manner more fully described in my application for Letters Patent, Serial No. 356,850, filed June 26, 1890. In order that the fibers may be the more compactly folded and the tuft guided into the block without liability to open, I provide side plates j^2, as shown in Figs. 2 and 5, at opposite edges of the fingers J J'.

The operator may determine by hand the quantity of fiber to be employed in each tuft; but I prefer to feed the fibers into the machine in a continuous sheet or layer, as shown in Fig. 2, and to divide from the end of this sheet or layer automatically the proper quantity to form a tuft. This division is effected by a vertically-sliding finger M, mounted in the frame at one side of the block F and adjacent to the vertical opening f, as plainly shown in Figs. 2, 3, 5, and 6. This slide is pointed at its lower end and stands normally, as shown in Fig. 2, in an elevated position above the fiber. Just previous to the descent of the staple and its carrying-finger I this slide descends to the position shown in Fig. 3, and in so doing severs from the remaining mass the proper quantity of bristles to form a single tuft. Its pointed end bridges over the space between the block F and the table, thus separating the tuft from the remaining fibers and forcing the latter backward, that they may not interfere with the descent of the fastening of the staple or finger.

The operation of forming a fastening and a tuft and of inserting them is as follows: Feed-rolls first carry the wire forward beneath the cutter H and finger I against the stop G. The fibers are in the meantime advanced by the operator so that they lie across the opening f beneath the finger I. The slide M now descends, isolating the fibers for the tuft and confining them in the path of the finger. The knife next severs the wire, and the finger I, descending, bends the wire into the required

form and carries the resulting staple downward upon the tuft, which in turn doubles or folds the tuft, carrying it downward between the fingers J J′ into the block, thus completing the operation, after which the parts assume their original positions.

The parts above described, which form the essential features of my invention, may be operated by a driving mechanism of any appropriate character; but I will now describe the mechanism shown in the drawings, which I consider best for use under ordinary conditions.

O represents a horizontal driving-shaft mounted in bearings on the main frame and provided at one end with a crank o, connected by a pitman P with a lever or walking-beam Q, journaled midway of its length on the main frame. The free end of this beam is connected by a pivot to a link i^2, which is in turn connected by a pivot to a slide i^3, mounted in vertical guides in the main frame and carrying the bending and driving finger I, so that at each revolution of the main shaft and crank the finger is carried downward and then elevated to its original and normal position. In order that the movement of the driving-finger I may be increased or diminished to meet the different conditions encountered in practice, the pitman P is connected to the beam Q by a pivot p, adjustable in a slot q in the beam to or from the fulcrum of the latter. This adjustment varies the distance through which the beam is vibrated. The driving-finger I passes through a stud on the face of the slide i^3, and is secured therein by set-screws i^4, this stud serving also as the lower journal or pivot for the slide-operating link i^2.

In order that the path through which the beam Q moves may be varied without changing the length of its movement, the pitman P is made variable in length, its upper portion p' being inserted into an end plate p^2 and secured by adjusting-nuts p^3, so that one part may be adjusted longitudinally in relation to the other.

In order that the beam Q may impart motion to the knife-operating lever, it is provided at its free end with a cam-surface h^3, which acts against a roller h^4 on the knife-operating lever h', so that as the end of the beam descends it causes the descent of the knife and the severance of the wire. The knife-operating lever is returned to its normal position when relieved from the action of the beam by the spring h^5.

The tuft-separating slide M is operated by an upright rod m, attached at its lower end thereto and connected at its upper end to an elbow-lever m', pivoted to the main frame and connected by link m^2 to the knife-operating lever h', from which it receives motion. The roller h^4 of the lever h' is connected thereto by a stud mounted in a slot, as shown in Fig. 2, so that its position may be varied in order to change the point at which the knife and the slide M stop in their descent.

The slide-operating rod m is divided and its two ends threaded into a connecting-sleeve m^4, as shown in Fig. 1, so that the length of the rod may be adjusted to vary the rise and fall of the slide M. The upper feed-roll receives motion through a link e^6, connected at its lower end to the roll-driving lever e^5 and at its upper end to a lever e^7, which is pivoted to the main frame at e^8 and provided with a roller e^9, on which the beam Q operates with a lifting effect, so as to turn the feed-roll forward and advance the wire while the knife and driving-finger are in their elevated positions. A spring e^{10}, acting on the lever e^7, returns the roll-driving devices to their original positions as the beam Q descends.

It is obvious that the driving-finger I and the parts adjusted to co-operate therewith will serve to produce and drive staples and tufts of one size only. In order to adapt the machine for producing and driving staples and tufts of different sizes, the driving-finger I is made detachable by means already described, so that it may be removed and replaced by another of different size. The employment of a different driving-finger will of course necessitate a corresponding change in the point at which the wire is severed—that is to say, in the length of the severed portion—and also a corresponding variation in the width of the opening or channel through which the staple and the tuft are driven. To this end I secure the blocks F F′ and the stop G by bolts f^6 passing through slots therein, so that they may be adjusted horizontally to the right and left. The guide-finger J is made adjustable in like manner. These adjustments will serve not only to vary the width of the opening, but also to change the distance between the knife and the abutment against which the end of the wire stops.

Passing now to the construction of the clutch mechanism by which the driving-shaft is driven intermittingly one revolution at a time, attention is directed particularly to Figs. 1, 11, and 12, in which T represents a driving-pulley mounted to turn loosely and continuously on the end of the main driving-shaft O. The hub of this driving-pulley is enlarged at the inner end into the form of a disk and provided near the outer edge of the disk with one or more driving-studs o'. U represents a disk keyed or otherwise secured to the driving-shaft adjacent to the driving-pulley and provided on its rear side with a dog or latch u, pivoted thereto to swing inward and outward, so that its end may be thrown into or out of the path of the driving-stud o'. When the end of the dog is thrown inward, as shown in Fig. 12, the driving-stud o' will strike against its end and carry it forward, thereby causing the rotation of the disk U and the main shaft. The dog is urged constantly inward by a spring u^2, attached to the disk U and acting on a stud v^3, formed on the dog and projecting through the slot in the disk U. The dog will therefore engage auto-

matically with the driving-stud and remain in engagement until forcibly disengaged. To effect this disengagement at the end of each revolution and always at the same point in the revolution, I mount loosely around the shaft O or other suitable support an elbow-lever V, one end of which terminates in an eccentric or cam surface v, which rests normally against a fixed stop-pin v^2 in the position shown in Fig. 12. As the parts complete their revolution the stud v^3 of the dog will ride over the stationary cam-surface v and be forced outward thereby, so as to disengage the dog from the driving-stud o', whereby the driving-shaft is permitted to stop, while the driving-pulley continues its revolution. The parts will at this time stand in the position shown in Fig. 13. The cam-lever V is connected at its lower end by link v^4 to one end of a foot-lever v^5. When this lever is depressed, it turns the cam-lever V backward to the left in the opposite direction to that in which the shaft revolves. The effect is to carry the cam-surface v from under the stud v^3 of the driving-dog, whereby the end of the dog is permitted to drop again into the path of the driving-stud o', when the shaft will give a second revolution and then disengage, as before. In order to prevent the parts from being rotated beyond the proper points by reason of their momentum, I form the disk U with a flattened portion u^4 on its edge, and I pivot to the frame a brake-lever u^5, drawn downward against the edge of the disk by a spring u^6, so that as the disk completes its revolution the lever comes to a bearing upon the flat surface and offers an increased resistance to further motion.

Having thus described my invention, what I claim is—

1. In a brush-machine, mechanism for cutting wire into lengths, in combination with mechanism for bending the lengths into U-shaped staples and driving the staples with their closed ends forward against the tufts and therewith into the brush-block.

2. In a brush-machine, the combination, substantially as described, of a support for the bored block or body, guides grooved in their proximate faces and terminating adjacent to the face of the block, a reciprocating driving-finger acting between the guides to bend the wire into staples and deliver the staples between the guides and into the block, and a fiber-supporting table having an opening through which the fibers are doubled and delivered between the guides by the advancing finger.

3. The fiber-supporting table with an opening therethrough, in combination with the grooved guides, the finger reciprocating between the guides to drive the tufts and their fastening-staples, and the reciprocating cut-off finger to isolate the tuft from the remaining fibers.

4. In a brush-machine, and in combination with guides between which it acts, a reciprocating finger, substantially as shown, which serves the double purpose of bending wire into staples and driving the staples and tufts into the brush-block.

5. In a brush-machine, the wire-feeding mechanism, the cutter, the grooved guides, and the reciprocating bending and driving finger acting between the guides, in combination with driving mechanism timed to operate the feeder, the cutter, and the finger in the order named.

6. In a brush-machine, guides having parallel grooved faces and serving to guide the tufts and their fastenings into the holes in the block, in combination with means, substantially as shown, for changing the distance between said faces, whereby the parts may be adjusted for the insertion of tufts and fasteners of different sizes.

7. The horizontal table to support the fibers, with an opening therethrough, in combination with the grooved fingers below and the grooved blocks above the table, the slide M, the knife H, and the finger I.

8. In combination with the bending and driving finger I and knife H, the lever h', the walking-beam having the cam-surface to actuate the lever, and the link connection between the walking-beam and finger I.

9. In combination with the walking-beam having the cam-surface, the knife-operating lever h', actuated thereby, the slide M, the elbow-lever m' to operate the same, the link connecting the two levers, the finger I, and the link connecting said finger with the walking-beam.

10. In combination with the walking-beam, the feed-rolls, the pawl-and-ratchet mechanism to turn the roll, the lever actuated by the beam, the rod connecting said lever with the pawl-lever, and the spring to return the parts to their normal positions.

11. In a brush-machine, a reciprocating tuft-driving device and a crank-shaft by which it is reciprocated once at each rotation, in combination with a crank-driving clutch adapted to disengage automatically at the end of each rotation, and a device under the control of the attendant to re-engage the clutch.

12. The driving-wheel provided with a driving-stud, and the driven wheel having a movable dog to engage the stud, in combination with a spring to cause the engagement, and the cam under the control of the attendant to automatically disengage the dog and to permit its re-engagement at will.

In testimony whereof I hereunto set my hand, this 26th day of July, 1890, in the presence of two attesting witnesses.

McCLINTOCK YOUNG.

Witnesses:
EDWIN C. MARKELL,
MARSHALL FOUT.