C. A. SANTMYERS.

CIRCULAR KNITTING MACHINE.

APPLICATION FILED FEB. 28, 1905.

**1,068,534.**

Patented July 29, 1913.

5 SHEETS—SHEET 1.

FIG. 1.

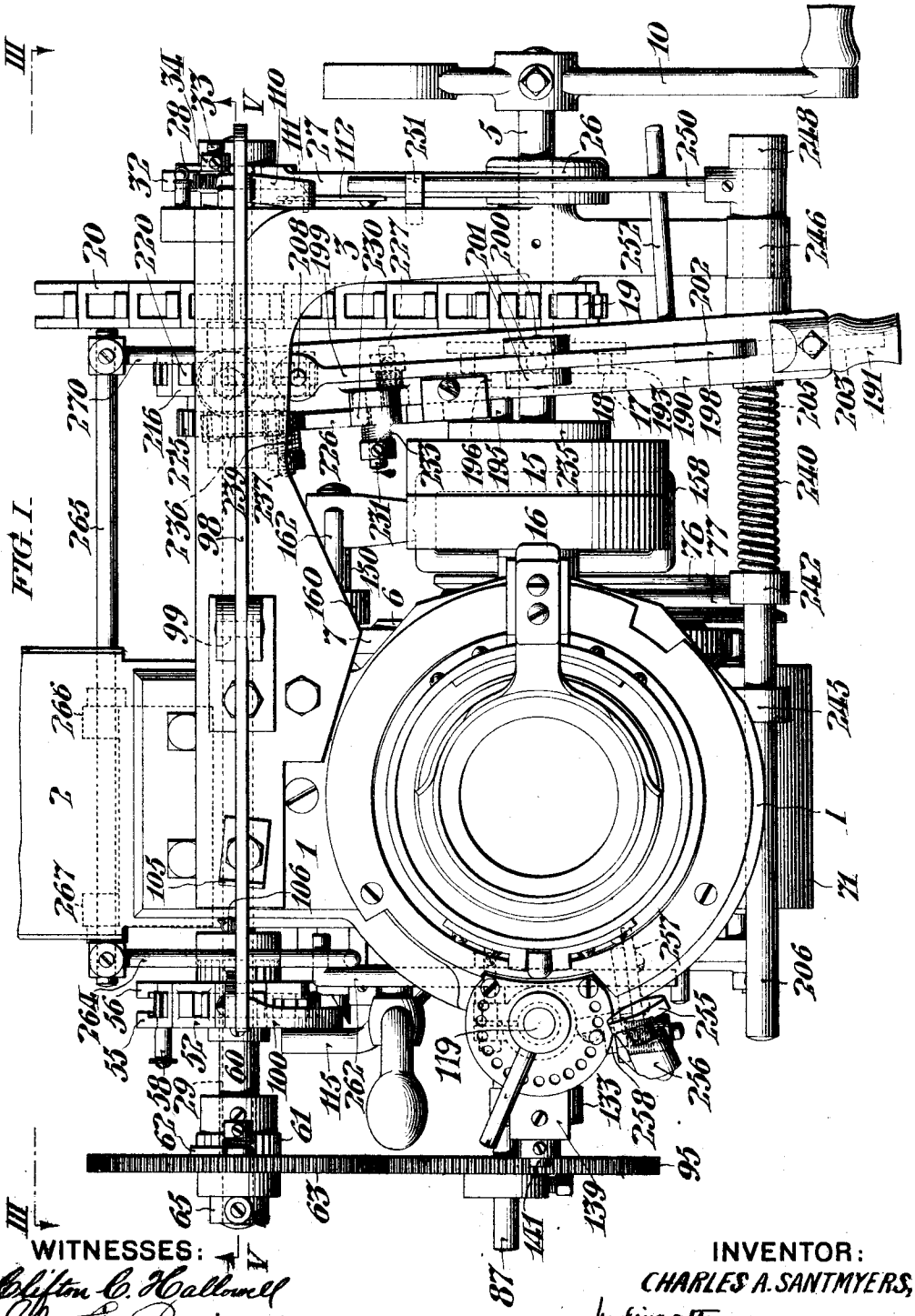

WITNESSES:

Clifton C. Hallowell

John E. Bergner.

INVENTOR:

CHARLES A. SANTMYERS,

by their attorneys

Philip Paul & Fraser

C. A. SANTMYERS.

CIRCULAR KNITTING MACHINE.

APPLICATION FILED FEB. 28, 1905.

**1,068,534.**

Patented July 29, 1913.

5 SHEETS—SHEET 2.

FIG. II.

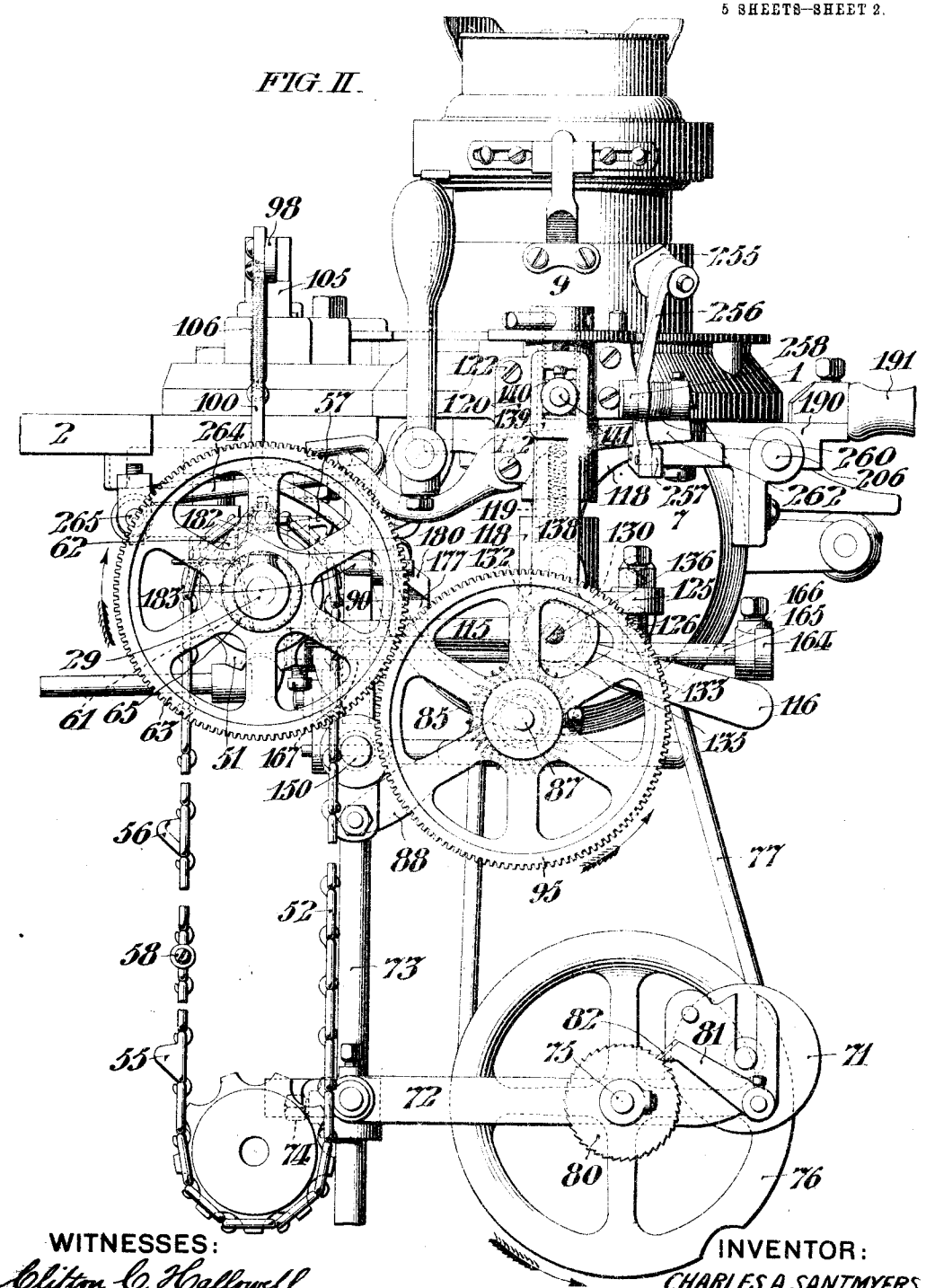


WITNESSES:

Clifton C. Hallowell

John C. Bergner.

INVENTOR:

CHARLES A. SANTMYERS

by his attorneys

Paige Paul & Fairey

C. A. SANTMYERS.

CIRCULAR KNITTING MACHINE.

APPLICATION FILED FEB. 28, 1905.

**1,068,534.**

Patented July 29, 1913

5 SHEETS—SHEET 3.

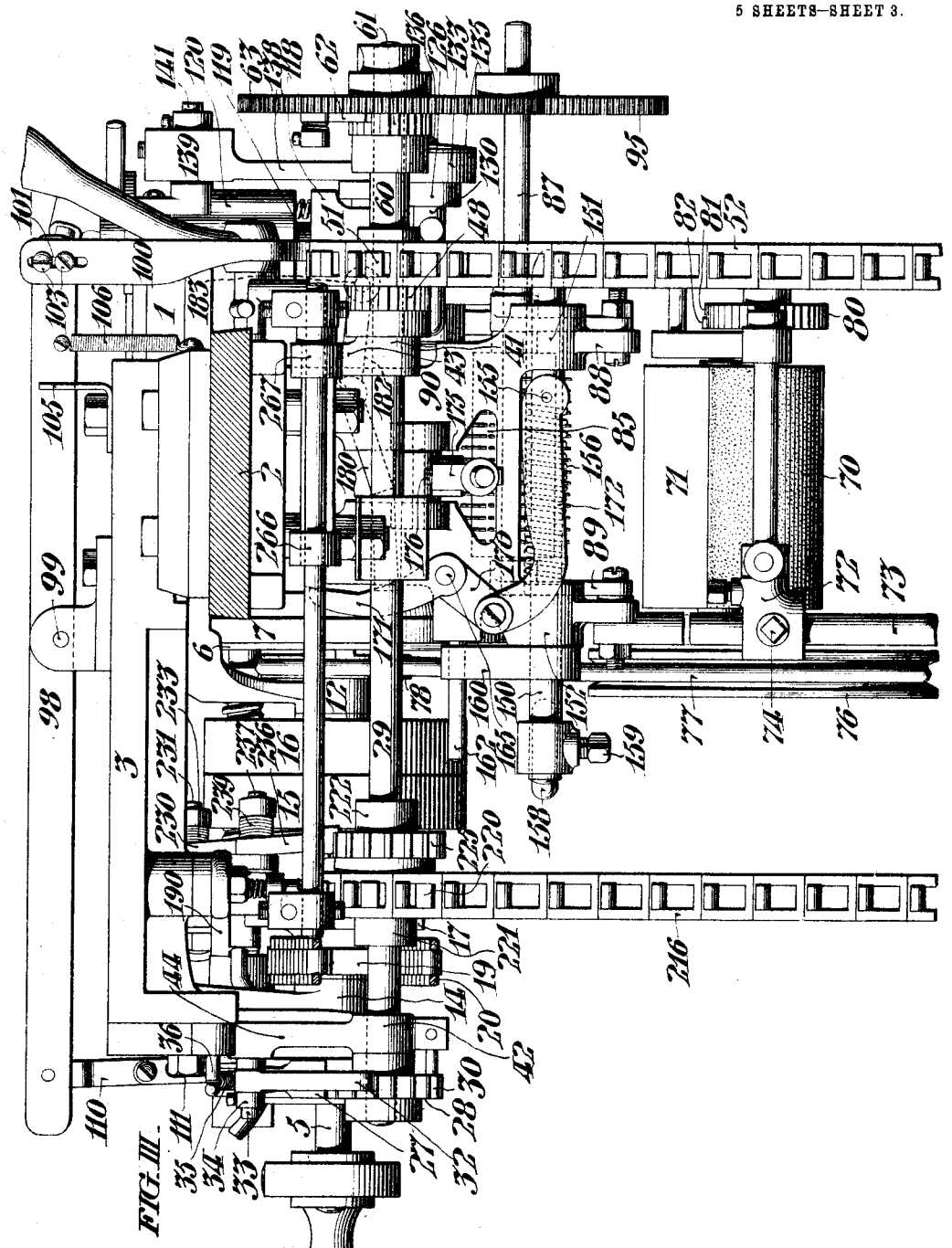

FIG. III.

WITNESSES:

Clifton C. Hallowell

John C. Burgner

INVENTOR:

CHARLES A. SANTMYERS

by his attorneys

Paige Paul & Fraley

C. A. SANTMYERS.

CIRCULAR KNITTING MACHINE.

APPLICATION FILED FEB. 28, 1905.

**1,068,534.**

Patented July 29, 1913.

5 SHEETS—SHEET 4.

FIG. IV.

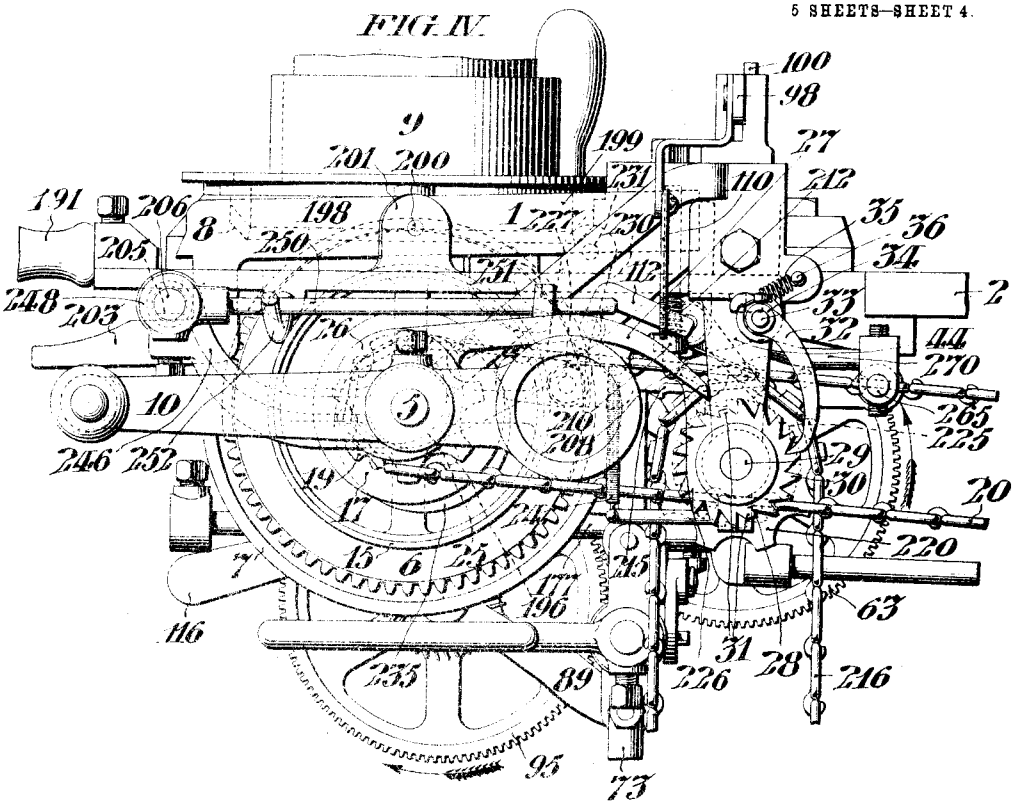


FIG. V.

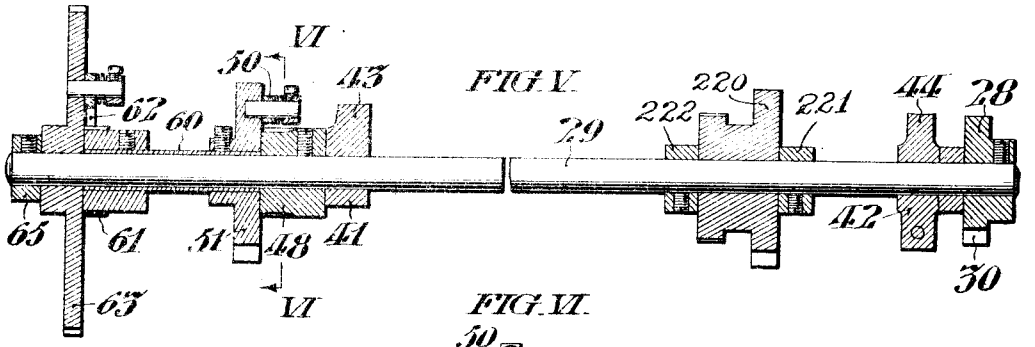


FIG. VI.

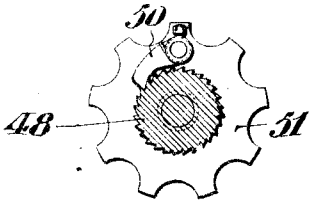


WITNESSES:

Clifton C. Hallowell

John C. Burgess

INVENTOR:

CHARLES A. SANTMYERS,

by his attorneys

Paige Paul & Bailey

C. A. SANTMYERS.

CIRCULAR KNITTING MACHINE.

APPLICATION FILED FEB. 28, 1905.

**1,068,534.**

Patented July 29, 1913.

5 SHEETS—SHEET 5.

FIG. VII.

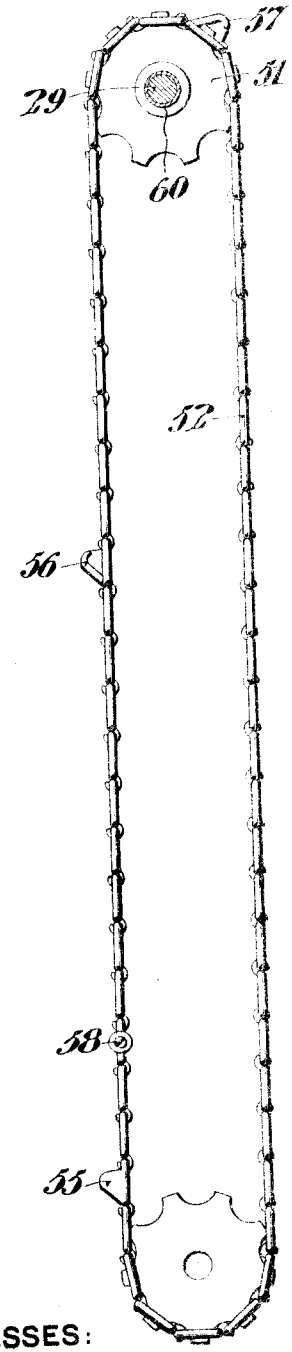


FIG. VIII.

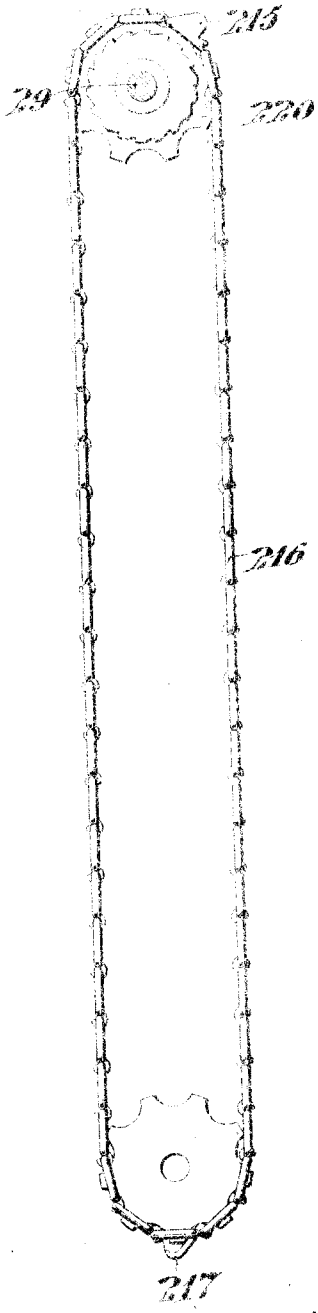


WITNESSES:

Clifton C. Hallowell

John C. Bergner

INVENTOR:

CHARLES A. SANTMYERS,

by their attorneys

Paige Paul & Bailey

# UNITED STATES PATENT OFFICE.

CHARLES A. SANTMYERS, OF PHILADELPHIA, PENNSYLVANIA, ASSIGNOR TO JOHN B. PAXTON AND ELLIS I. O'NEILL, OF PHILADELPHIA, PENNSYLVANIA.

## CIRCULAR-KNITTING MACHINE.

1,068,534. Specification of Letters Patent. Patented July 29, 1913.

Application filed February 28, 1905. Serial No. 247,676

*To all whom it may concern:*

Be it known that I, CHARLES A. SANTMYERS, of Philadelphia, in the State of Pennsylvania, have invented certain new and useful Improvements in Circular-Knitting Machines, whereof the following is a specification, reference being had to the accompanying drawings.

My improvements relate to circular knitting machines, having relatively movable cam and needle cylinders, and provided with fashioning mechanism comprising needle lifting and depressing pickers and mechanism which causes one cylinder to rotate continuously with respect to the other during plain knitting and to oscillate during the knitting of the heel and toe pockets.

It is the object of my invention to provide such a circular knitting machine with measuring mechanism arranged to measure the actual length of the fabric as knit; said mechanism being arranged to control the stitch length regulating device, and also to stop the machine when a predetermined length of fabric is thus measured, irrespective of the number of courses in said fabric, in order that upon the starting again of the machine by the operator, reciprocation may then begin for the formation of the heel or the toe pocket as the case may be.

As hereinafter described my invention comprises a circular hosiery knitting machine having relatively movable cam and needle cylinders provided with a series of needles, and measuring mechanism arranged to measure the length of the fabric irrespective of the number of courses knit, which fabric is arranged to be progressed in engagement with a brush wheel connected to control the stitch length regulating device and to regulate the position of the pockets in accordance with the length measured.

My invention comprehends the various novel features of construction and arrangement hereinafter more definitely specified.

In the accompanying drawings, Figure I, is a plan view of a knitting machine conveniently embodying my improvements. Fig. II, is an elevational view of the left hand side of said machine. Fig. III, is a rear elevational view of said machine, the supporting leaf of which is sectional on the line III, III, of Fig. I. Fig. IV, is an elevational view of the right hand side of said machine. Fig. V, is a vertical sectional view of the parts carried by the countershaft, taken on its axial line V, V, in Fig. I. Fig. VI, is a transverse sectional view taken on the line VI, VI, in Fig. V. Fig. VII, is a side elevation of the measuring chain arranged to control the length of the fabric. Fig. VIII, is a side elevation of the pattern chain, arranged to control the pickers.

In said figures, 1, is the bed plate having the rearwardly projecting supporting leaf 2, and the bearing frame 3, which latter is arranged to support the shafts, and mechanism extending beyond the right hand side of said bed plate 1.

The main driving shaft 5, is provided at its inner end with the bevel gear 6, protected by the guard 7, and arranged to engage the bevel gear 8, on the cam cylinder 9, and said shaft is provided at its outer end with the usual operating handle 10. Said shaft 5, is journaled in the bearing 12, depending from the bed plate 1, and in the bearing 14, in the bearing frame 3, aad is provided with the tight and loose pulleys 15, and 16, and the clutch disk 17, which latter is mounted thereon, and arranged to be shifted axially with respect to it. Said clutch disk 17, comprises a driving sprocket 19, arranged to be oscillated by the driving chain 20, which may be connected with any desired oscillatory power. Said driving shaft 5, also comprises the eccentric 25, secured thereon and provided with the eccentric strap 26, having the pawl 27, arranged to intermittently rotate the ratchet 28, which is secured on the countershaft 29. Said pawl 27, is provided with the coiled spring 24, which tends to normally draw it toward its ratchet 28. The ratchet 28, is provided with the teeth 30, and the oppositely disposed low teeth 31, over which latter the pawl 27, is arranged to normally reciprocate idly, and said ratchet 28, is prevented from backward rotation by the pawl 32, which is pivoted on the pin 33, extending from the bearing frame 3, and held in place by the collar 34. Said pawl 32, is pressed into contact with the ratchet 28, by the spiral spring 35, attached at one end to said pawl and at the other end to the pin 36, on the frame 3.

The countershaft 29, is journaled in bearings 41, and 42, in the hangers 43, and 44,

depending respectively from the bed plate 1, and the bearing frame 3. Said countershaft 29, is provided with the ratchet 48, secured thereon and arranged to engage the pawl 50, on the sprocket 51, carrying the measuring chain 52, which is provided with the high links 55, 56, 57, and the high side link 58. The sprocket 51, is carried by the sleeve 60, which is loosely mounted for rotation on said countershaft 29, and said sleeve also carries the ratchet 61, secured thereon, and arranged to be rotated by the pawl 62, carried by the gear 63, which is loosely mounted on said countershaft 29, between the sleeve 60, and the retaining collar 65. The measuring chain 52, is normally progressed by the fabric which descends from the knitting cylinders to the takeup mechanism, said chain being connected by a train of gearing with a brush wheel which engages the fabric as hereinafter described.

The takeup mechanism comprises the rollers 70, and 71, journaled in the frame 72, which is adjustably secured to the depending rod 73, by the set screw 74. Said roller 70, is preferably coated with emery to insure its frictional engagement with the fabric, and its shaft 75, is provided at one end with the pulley 76, connected by the belt 77, to the pulley 78, secured on the driving shaft 5. It will be seen that the belt 77, does not positively drive the pulley 76, but by its frictional contact it tends to rotate said pulley 76, and the roller 70, (in the direction of the arrow shown in Fig. II), to draw the fabric from the cylinder with a uniform tension as it is knit. The shaft 75, also carries the ratchet 80, which is engaged by the two pawls 81, and 82, of different lengths, arranged to minimize the lost motion of said ratchet.

Interposed between the knitting cylinder and the takeup mechanism is the brush roller 85, having sharpened pins extending substantially radially therefrom and arranged to be engaged by the fabric in its descent from the cylinders to said takeup rollers. The brush roller 85, is secured on the shaft 87, which is journaled in the brackets 88, and 89, extending from the hanger 90, which latter depends from the bed plate 1. Said shaft 87, carries the gear 95, arranged to mesh with the gear 63, and rotate the latter to progress the measuring chain 52, having a high link 55, which is arranged to rock the lever 98, on its fulcrum 99, by encountering its depending end member 100. Said member 100, is arranged for adjustment with respect to the lever 98, by being provided with the slot 101, through which the screws 103, pass in threaded engagement with said lever. The end of the lever 98, to which the depending member 100, is secured is normally depressed against the stop plate 105, by the spring 106, which effects the uplifting of its opposite end to which the depending member 110, is secured. Said member 110, is provided with the slot 111, arranged to engage the finger 112, of the pawl 27, and uphold said pawl against the tension of its spring 24, in such a position that it can only engage the whole teeth 30, and reciprocate idly over the half teeth 31, of the ratchet 28, until the high link 55, engages the member 100, and rocks the lever 98, and thereby drops said pawl 27, into engagement with the half teeth 31, to start said ratchet 28, the pawl 27, thereafter engaging the whole teeth 30, until another half tooth is encountered over which the pawl reciprocates idly as before. The function of said pawl 27, and ratchet 28, is to progress the pattern chain 52, while the high side link 58, is in engagement with the lever 115, of the stitch length regulating mechanism. Said stitch length regulating mechanism is adapted for fashioning the stocking at the ankle, and comprises the needle cylinder supporting bracket 118, secured to the lower end of the plunger 119, which latter is arranged for vertical reciprocation in the split bracket 120, extending from the bed plate 1, said bracket being provided with the clamping screws 122. The frame plate 125, is secured to the plunger 119, beneath the bracket 118, and comprises the depending lugs 126, in which the eccentric shaft 130, is journaled. It may be here noted that the plate 125, bracket 118, lugs 126, and shaft 130, are clearly shown in a Patent No. 595,889, granted to Paxton and O'Neill, December 21st, 1897, the respective parts therein being best shown in Figs. 2 and 3, of said patent. Said shaft 130, is provided with the eccentric 132, having the eccentric strap 133, and held in place by the cap plate 135, secured to the shaft 130, by the set screw 136. Said eccentric strap 133, is provided with the pitman 138, having the box 139, arranged to embrace the block 140, on the stud 141, extending from the bracket 120. The rotation of the shaft 130, and its eccentric causes it to rise and thereby lift all the parts carried by it including the bracket 118, and the needle cylinder 9, which is supported thereon. The upward movement of said needle cylinder effects a variance in the length of the stitches or loops of the fabric by the relative movement of the needles and sinkers. The lever 115, is provided with the handle 116, by which said stitch length regulating mechanism may be set by hand.

The belt shifting mechanism comprises the slide rod 150, mounted in suitable bearings 151, and 152, in the hanger 90, and provided with a pin 155, between which and the bearing 152, the spring 156, is mounted to normally tend to shift said rod 150, to the right with respect to Fig. III. The rod 150,

carries the belt shifting fork 158, secured thereon by the set screw 159, and said rod 150, is prevented from turning in its bearings by the cross head 160, which is pinned to said rod and arranged to slide on the guide pin 162, extending from the hanger 90. As shown in the drawings, the belt shifting fork 158, is in a position to guide the belt to the loose pulley 16, and may be shifted to the tight pulley by the hand lever 164, on the rock shaft 165, journaled in the bearings 166, and 167, respectively on the guard 7, and in the hanger 90. Adjacent to said bearing 167, the shaft 165, is provided with the rocker arm 170, and lever 171, the former being connected by the link 172, to the pin 155, and the latter arranged to extend over the lever 175, when the belt is on the tight pulley 15. Said lever 175, is provided with the adjustable set screw 176, arranged to contact with, and lift said lever 171, and thereby rock the arm 170, to pass its dead center and permit the spring 156, to shift the rod 150, and the parts carried by it to the right with respect to Fig. III. Said lever 175, is fulcrumed intermediate of its length in the hanger 90, and has the oppositely extending arm 177, arranged to be engaged by the inwardly extending arm 180, of the centrally pivoted lever 182, which is provided with the adjustable pin 183, arranged to extend into the path of the high links 56, and 57, of the pattern chain 52.

The motion changing mechanism is arranged to be shifted by hand and comprises the shifting lever 190, pivoted to the bearing frame 3, and having the handle 191. Said shifting lever carries the yoke 193, arranged to engage the circumferential groove 18, of the clutch disk 17, to shift the latter into engagement with the tight pulley 15, which is provided with the pin 195, arranged to enter the recess 196, in said disk. Said shifting lever 190, is also provided with the latch lever 198, pivoted centrally on the pin 200, between the lugs 201, on the lever 190. The latch lever 198, extends through the aperture 202, in the shifting lever 190, and is provided with the latch piece 203, arranged to engage the notch 205, in the underside of the rod 206. The oppositely extending arm 199, of said latch lever 198, has the tripping pin 208, extending through the shifting lever 190, and said pin is provided with the collar 210, between which and said shifting lever 190, the spiral spring 212, is held under compression to normally depress said pin 208, and to hold the latch piece 203, in contact with the rod 206. The trip pin 208, projects into the path of the high link 215, on the pattern chain 216, which is carried by the sprocket 220, loosely mounted on the countershaft 29, between the collars 221, and 222, which are secured on said countershaft. Said sprocket 220, comprises the ratchet 225, arranged to be progressed by the pawl 226, pivoted on the pin 227, extending from the swinging lever 230, which latter is pivoted on the pin 231, extending from the shifting lever 190, and is arranged to normally withdraw said pawl 226, from its ratchet 225, by the spring 233. Said ratchet 225, is prevented from backward rotation by the pawl 236, pivoted on the pin 237, which extends from the lever 190, and is provided with a spring 239, arranged to press said pawl 236, into engagement with its ratchet. The lever 230, carrying the pawl 226, is arranged to be engaged by the eccentric 235, carried by the tight pulley 15, so that at each oscillation of said pulley during the knitting of the heel or toe pocket said eccentric 235, effects the reciprocation of the pawl 226, to rotate the ratchet 225, and its sprocket 220, to progress the pattern chain 216. Said shifting lever 190, is normally held in its right hand position with respect to Fig. I, by the spring 240, which encircles the rod 206, between said shifting lever 190, and the collar 242, adjustably secured on said rod.

The rod 206, is secured in the brackets 245, and 246, extending respectively from the bed plate 1, and the bearing frame 3, and is provided with a collar 248, between which and the bracket 246, the lever 250, is loosely mounted and extends through the eye 251, of the pawl 27. Said lever 250, is arranged to lift the pawl 27, out of engagement with its ratchet 28, when the machine is adapted to knit the heel and toe pocket, by being engaged and lifted by the upwardly curved arm 252, which is carried by the shifting lever 190, and which extends beneath said lever 250.

The cam cylinder 9, may be provided with the usual lifting and depressing pickers, having any convenient form of latch (omitted from the drawings,) arranged to be tripped by the picker latch cam 255, which is adjustably secured in the lever 256, pivoted centrally to the bracket 258, on the bed frame 1. Said cam 255, is normally held out of the path of the picker latch mechanism by the spring 260. The lever 256, is provided with the arm 257, arranged to be engaged by the centrally pivoted lever 262, which in turn is engaged by the lever 264, secured on the rock shaft 265. Said rock shaft 265, is journaled in bearings 266, and 267, in the hanger 43, and is provided with the lever 270, extending over the sprocket 220, and in the path of the high link 217, on the pattern chain 216. Therefore, the lever 270, is uplifted by said high link 217, and the cam 255, is thereby shifted toward the cam cylinder 9, and into the path of the picker latch releasing mechanism.

The operation of the machine is as fol-

lows:—The machine is rotated to knit the leg of the hose which is drawn down by the takeup mechanism, and in its descent engages and rotates the brush roller 85, which is connected to progress the measuring chain 52. When the ankle is reached, the high link 55, on said chain 52, uplifts the member 100, and rocks the lever 98, to lower the pawl 27, into engagement with the low tooth 31, of the ratchet 28, to start said ratchet so that its teeth 30, may be engaged by subsequent reciprocations of said pawl until another low tooth 31, is encountered when said pawl will again reciprocate idly over it. By the half rotation of the ratchet 28, the chain 52, is progressed by a more forcible and rapid movement until the high side link 58, has raised the lever 115, to set the stitch length regulating device to fashion the ankle. The measuring chain 52, is then progressed again by the brush roller 85, until the high link 56, encounters the pin 183, and trips the belt shifting mechanism to shift the belt to the loose pulley 16, as shown in the drawings, and the machine stops. The stopping of the machine controls the location of the heel pocket, and the operator then resets the stitch length regulating mechanism, raises the half back needles, and shifts the lever 190, to the left with respect to Fig. 1, to engage the oscillatory clutch disk 17, with the tight pulley 15, which causes the cam cylinder 9, to oscillate to form the heel pocket, during which time the pattern chain 216, is progressed, while the measuring chain 52, remains idle. When sufficient needles have been raised by the lifting pickers, the high link 217, on the pattern chain 216, encounters the lever 270, which rocks the picker latch cam 255, into the path of the picker latch mechanism, (not shown,) to release the depressing pickers, which depress the raised pocket forming needles down into action. When all of the raised pocket forming needles have been depressed the high link 215, on the pattern chain 216, uplifts the pin 208, which releases the latch piece 203, from the notch 205, and the lever 190, is again returned to its normal position by the spring 205, and the machine is again brought to rest. The operator then shifts the belt to the tight pulley 15, and the machine is rotated to knit the foot, the measuring chain 52, being progressed as before, until the high link 57, encounters the pin 183, to shift the belt to the loose pulley 16, which steps the machine and controls the location of the toe pocket. The operator again raises the half back needles, and shifts the lever 190, to the position to oscillate the cam cylinder 9, to knit the toe pocket. When the maximum number of needles have been raised the high link 217, shifts the latch cam 255, to release the depressing pickers. When the pocket forming needles have all been depressed the high link 215, releases the lever 190, which is returned to its normal position by the spring 205, and the machine stops ready to start another stocking.

Hitherto in the production of string-work hosiery the insertion of the pockets for the heels and toes of the stockings has been controlled according to course measurement with the consequent irregularity of the lengths of the stockings, making it necessary to sort and match all hosiery thus produced. According to the invention which I have thus described, string-work hosiery is produced in which the insertion of these pockets is controlled exclusively by actual length measurement, thus doing away with the necessity of sorting and matching the stockings produced by the machine.

I do not desire to limit myself to the precise details of construction and arrangement herein set forth, as it is obvious that various modifications may be made therein, without departing from the essential features of my invention.

I claim:—

1. In a circular hosiery knitting machine, adapted to produce string-work fabric of indefinite length containing tubular portions and heel and toe pockets, the combination of measuring mechanism arranged to continuously measure the length of such tubular fabric as it is produced; means for automatically stopping the machine at the end of each length of tubular fabric; means for producing heel and toe pockets in the fabric; and mechanism whereby the position of all of such pockets in the string-work in relation to each other is indicated by the length measuring mechanism, substantially as set forth.

2. In a circular hosiery knitting machine, the combination with the takeup mechanism; of a brush roller arranged to rotate in accordance with the actual length of the fabric as it is knit; a measuring chain normally progressed by said brush roller; a lever arranged to be shifted by said measuring chain; mechanism actuated by said lever arranged to progress said chain independently of said brush roller; a second lever arranged to be shifted by said measuring chain; and a stitch length regulating device arranged to be set by said second lever, substantially as set forth.

3. In a circular hosiery knitting machine, the combination with the takeup mechanism; of a brush roller arranged to engage the fabric as it is knit; a countershaft carrying actuating mechanism; a sleeve on said countershaft also carrying actuating mechanism; a train of gearing connecting said brush roller and said sleeve; means whereby said countershaft may be rotated independently of said train of gearing; a measuring chain; a lever arranged to be shifted by

said measuring chain; and a stitch length regulating device arranged to be set by said lever, substantially as set forth.

4. In a circular hosiery knitting machine, the combination with a take-up mechanism; of a brush roller arranged to engage the fabric as it is knit; a counter-shaft; a ratchet secured to said counter-shaft; a sprocket carrying a measuring chain loosely mounted on said counter-shaft gearing connection between said sprocket and said brush roller whereby said chain is normally progressed; means comprising a lever operated by said chain, arranged to control said ratchet and said chain to shift the latter independently of said brush roller, substantially as set forth.

5. In a circular hosiery knitting machine, the combination with a take-up mechanism; of a brush roller arranged to engage the fabric as it is knit; a counter-shaft; a ratchet secured to said counter-shaft; a sprocket carrying a measuring chain loosely mounted on said counter-shaft; gearing connection between said sprocket and said brush roller, whereby said chain is normally progressed; means comprising a lever arranged to control said ratchet and said chain to shift the latter independently of said gearing, substantially as set forth.

6. In a circular hosiery knitting machine, the combination with a rotary take-up mechanism, comprising frictional driving mechanism; of a brush roller arranged to engage the fabric as it is progressed by said take-up mechanism; a measuring chain arranged to be progressed in accordance with the rotation of said brush roller; and means, comprising a lever actuated by said measuring chain, arranged to progress the latter independently of said brush roller; a second lever arranged to be shifted by said measuring chain; and a stitch length regulating device arranged to be set by said second lever, substantially as set forth.

7. In a circular hosiery knitting machine, the combination with a rotary take-up mechanism, comprising frictional driving mechanism; of a brush roller arranged to engage the fabric as it is progressed by said take-up mechanism; of a measuring chain arranged to be progressed in accordance with the rotation of said brush roller; means comprising a lever actuated by said measuring chain, arranged to progress the latter independently of said brush roller; and means arranged to vary the frictional engagement of said take-up mechanism with the fabric, substantially as set forth.

8. In a circular hosiery knitting machine, the combination with relatively movable cam and needle cylinders; of a take-up mechanism arranged to take up the fabric as it is knit; a brush roller arranged to be rotated by said fabric; a measuring chain arranged to be progressed by said brush roller; a stitch length regulating mechanism; a link on said chain arranged to shift said stitch length regulating mechanism in accordance with the measured length of fabric; means comprising a lever arranged to augment the speed of said chain independently of said brush roller when shifting said stitch length mechanism; a belt shifting link on said chain arranged to stop said machine when a predetermined length of fabric has been knit; and fashioning mechanism arranged to form pockets in said fabric, substantially as set forth.

9. In a circular hosiery knitting machine, the combination with relatively movable cam and needle cylinders; a driving shaft connected to one of said cylinders; a countershaft; a sprocket on said countershaft; a measuring chain carried by said sprocket; a ratchet having high and low teeth arranged to rotate said countershaft; a pawl operated by said driving shaft and arranged to engage said teeth: a lever arranged to normally uphold said pawl out of engagement with said low teeth; and means whereby said lever may be shifted to lower said pawl into engagement with the low teeth of said ratchet, substantially as set forth.

10. In a circular hosiery knitting machine, the combination with relatively movable cam and needle cylinders; of a driving shaft connected to one of said cylinders; a countershaft; a sprocket loosely mounted on said countershaft, carrying a measuring chain; a sprocket loosely mounted on said countershaft, carrying a pattern chain; a takeup mechanism arranged to continuously progress said measuring chain; an eccentric on said driving shaft arranged to intermittently progress said measuring chain; an eccentric on said driving shaft arranged to progress said pattern chain; high links on said measuring chain arranged to stop the machine at predetermined intervals when said machine is rotating, to locate the pockets; a high link in said pattern chain arranged to shift the picker latch cam; and a high link on said pattern chain arranged to stop the machine at the termination of the oscillatory movement, substantially as set forth.

11. In a circular hosiery knitting machine, the combination with relatively movable cam and needle cylinders; of a driving shaft connected to one of said cylinders; an eccentric carried by said shaft; a strap for said eccentric, provided with a pawl; a countershaft; a driving ratchet on said countershaft arranged to be rotated by said pawl; a low tooth on said ratchet; a sleeve loosely mounted on said countershaft; a sprocket carried by said sleeve; a sprocket ratchet secured to said countershaft adjacent to said sprocket; a pawl carried by said sprocket in

engagement with said sprocket ratchet; a gear loosely mounted on said countershaft; a gear ratchet secured to said sleeve adjacent to said gear; a pawl carried by said gear in engagement with said gear ratchet; a takeup mechanism; a brush roller between said takeup mechanism and said cylinders, and arranged to be progressed by the fabric in its movement from said cylinders to said takeup mechanism; a shaft for said brush roller; a driving gear on said shaft arranged to be rotated by said brush roller, and to mesh with the gear on said countershaft; a measuring chain carried by said sprocket and provided with a pawl shifting high link, a tension shifting high link, and a belt shifting high link; a lever arranged to be shifted by said pawl shifting high link, to lower the pawl carried by said eccentric into engagement with said low tooth; a tension regulating mechanism; a lever arranged to be engaged by said tension shifting high link, to shift said tension regulating mechanism; a belt shifting mechanism; a lever arranged to be engaged by said belt shifting high link to shift said belt shifting mechanism, substantially as set forth.

In testimony whereof, I have hereunto signed my name, at Philadelphia, Pennsylvania, this twenty-fifth day of February, 1905.

CHARLES A. SANTMYERS.

Witnesses:
JAMES H. BELL,
HENRY U. PAUL, Jr.