C. L. VAN NORSDALL.
AUTOMATIC LUBRICATING DEVICE.
APPLICATION FILED OCT. 19, 1914.

1,168,129.

Patented Jan. 11, 1916.
2-SHEETS—SHEET 1.

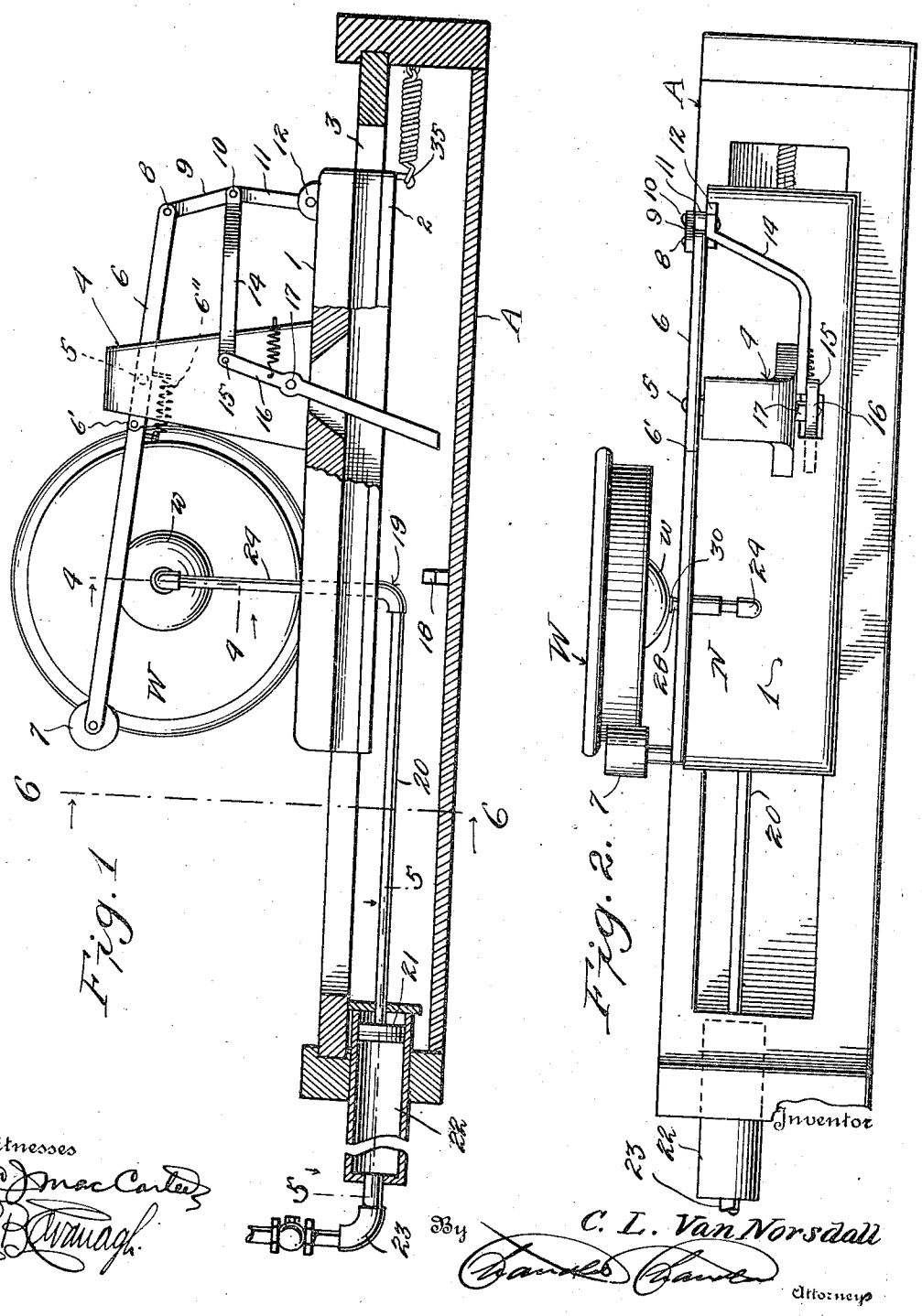

Witnesses
C. J. MacCartee
R. B. Cavanagh

Inventor
C. L. Van Norsdall
By
Attorneys

C. L. VAN NORSDALL.
AUTOMATIC LUBRICATING DEVICE.
APPLICATION FILED OCT. 19, 1914.

1,168,129.

Patented Jan. 11, 1916.
2 SHEETS—SHEET 2.

Fig. 6.

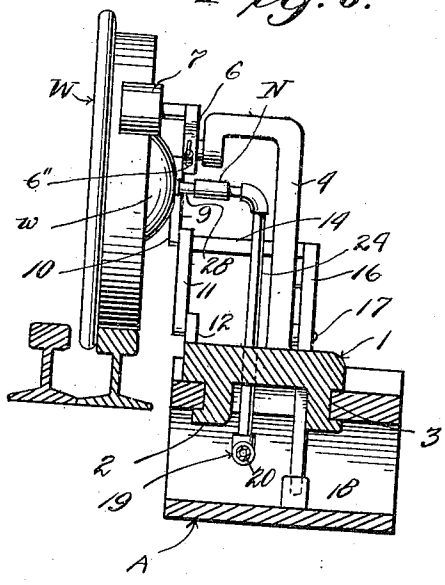

Fig. 3.

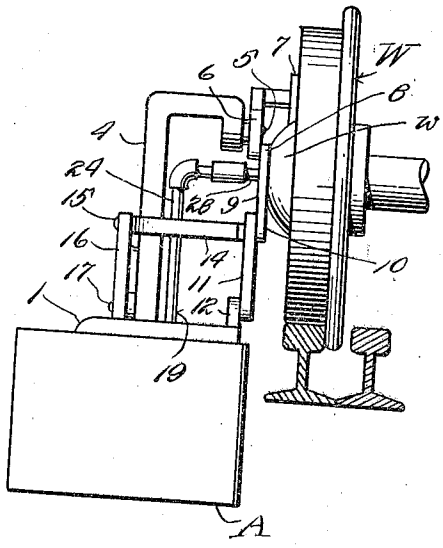

Fig. 4

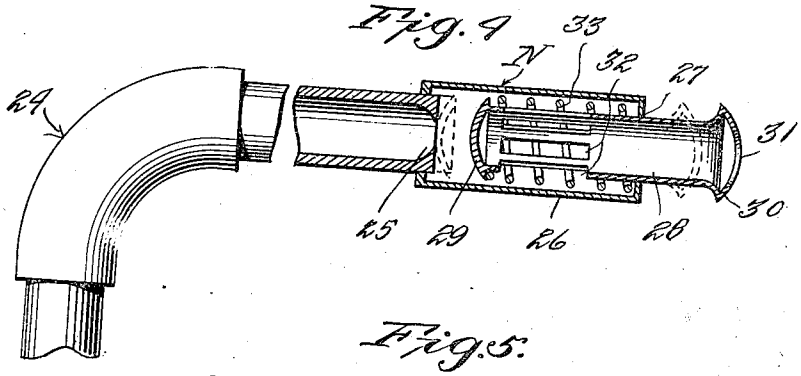

Fig. 5.

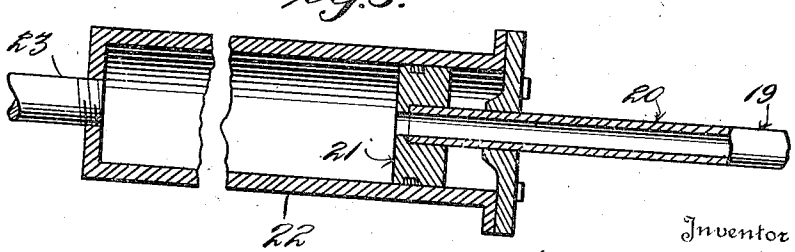

Witnesses

Inventor
C. L. Van Norsdall

By

Attorneys

UNITED STATES PATENT OFFICE.

CALVIN L. VAN NORSDALL, OF ARMA, KANSAS, ASSIGNOR OF ONE-FOURTH TO WILLIAM L. WEIR, OF WEIR, KANSAS.

AUTOMATIC LUBRICATING DEVICE.

1,168,129. Specification of Letters Patent. Patented Jan. 11, 1916.

Application filed October 19, 1914. Serial No. 867,446.

To all whom it may concern:

Be it known that I, CALVIN L. VAN NORSDALL, a citizen of the United States, residing at Arma, in the county of Crawford, State of Kansas, have invented certain new and useful Improvements in Automatic Lubricating Devices; and I do hereby declare the following to be a full, clear, and exact description of the invention, such as will enable others skilled in the art to which it appertains to make and use the same.

This invention relates to certain novel and useful improvements in an automatic lubricating device, adapted especially for lubricating the journal bearings of mine car wheels.

In carrying out my invention it is my purpose to provide a lubricating device which is adapted to be operated by the wheel of the car to permit the lubricant to be supplied to the journal bearing of such wheel, the parts being automatically returned to their normally inoperative position after the wheel has been lubricated so that the device is ready for the lubrication of the next wheel.

Still a further object of my invention is the provision of lubricating apparatus of this character which is adapted to be located alongside the trackway so that the car wheels may be quickly, thoroughly and successively lubricated.

With the above recited objects and others of a similar nature in view, my invention consists in the construction, combination and arrangement of parts set forth in and falling within the scope of the appended claims.

In the accompanying drawings: Figure 1 is a view partly in side elevation and partly in section of a device embodying my invention, and showing a car wheel in the act of being oiled. Fig. 2 is a top plan view. Fig. 3 is an end view. Fig. 4 is a cross sectional view taken on the line 4—4 of Fig. 1. Fig. 5 is a similar view taken on the line 5—5 of Fig. 1. Fig. 6 is a cross sectional view taken on the line 6—6 of Fig. 1.

Referring now to the accompanying drawings in detail, the letter A designates a base having mounted to slide thereon a table 1 which is provided with an extension or flange 2 depending from the bottom thereof and extending through a slot 3 in the base A. Carried by this table is a post 4 having pivoted thereto as at 5, a rod 6 having a break pivot 6′ and a spring 6″ normally holding the two parts of the rod in alinement. The forward end of the rod is provided with a roller 7 adapted to be contacted with by the wheel W which is to be oiled. The axle boxing of the wheel is shown at W and is provided with the usual oil port. The rear end of the pivoted rod 6 is pivotally connected as at 8 to the link 9, said link being pivoted adjacent its opposite end as at 10 to the vertical link 11, this latter link being pivoted as at 12 to the table. The cross link 14 is connected by the pivot 10 to the links 9 and 11, and is further pivoted at its forward end as at 15 to the trip bar 16, the latter being pivoted as at 17 to the post 4, the lower end of said trip bar being adapted to contact with the stop 18 located below the base A for the purpose hereinafter described.

Carried by the sliding table 1 is a pipe 19, the horizontal section 20 of which is provided with a bored piston head 21 sliding in the oil cylinder 22, this cylinder being supplied with oil through a supply pipe 23 leading to a suitable point of supply, such as a tank or the like. The vertical section 24 of the pipe 19 extends above the table and is of sufficient height to aline with the port in the axle boxing *w* of the car wheel when the latter is moved into position to be oiled. As will be seen by reference to Fig. 4, the upper end of this pipe section 24 is formed with a reduced outlet 25, and on the end of the pipe is applied a spring nozzle N, comprising a casing 26, through an opening 27 in the forward end of which slides a tubular stem 28 having its inner end provided with an imperforate convex head 29, while its outer end is provided with a convex head 30 having an outlet opening or port 31 therein. The stem is further provided with longitudinal slots 32 extending from points adjacent the head 29 to approximately the center of the stem. An expansion spring 33, bearing at one end against the head 29 and at its opposite end against the outer end wall of the casing 26 normally acts to hold the head 29 seated or closed against the outlet end 25 of the pipe 24. When, however, there is sufficient pressure of oil in the pipe 24, as when a car wheel W moves into position to bring the axle boxing against the head 31 of the nozzle, the pressure of oil will force the stem 28 outward against the tension of the spring 33, moving the head 29 away from the end 25 of the pipe 24 and the oil will flow into the casing 26, through

the slots 32 into the tubular stem and through the port or opening 31 in the head 30 to the axle boxing.

In the operation of the device it is to be understood that as the car travels along the trackway T, the wheel to be oiled will contact with the roller 7, thus pulling downward upon the bar 6, and as this bar is connected with the post 4 of the table 1 by means of the pivot 5, this table is pulled forward, and as the oil pipe 19 is carried by the table the piston head 21 will be moved forward in the oil cylinder 22 and the oil will be forced through the horizontal pipe section 20, up the vertical pipe section 24 and injected through the spring nozzle N in the axle bearing. When the piston has thus been pushed forward to substantially the limit of its movement toward the forward end of the cylinder 22, the lower end of the trip bar 16 will strike against the stop 18, thus bringing the lower end or contacting end of the trip bar rearward and throwing the upper end thereof forward. This causes a forward pull upon the link 14 and pulls forward upon the toggle link formed of the link members 9 and 11, and when this toggle link moves to the left or opposite to the position shown in Fig. 1, the rod 6 carrying the roller 7 will be pulled upon its pivot 5 so that the roller may be moved upward to permit the car wheel to pass. At the same time the table is returned to its normally inoperative position by means of a relatively powerful spring connected as at 35 to the flange 2 of the table 1. When the table has thus been returned to its normal position after the oiling of the wheel has taken place, the piston head 21 is of course, drawn back with the pipe 19 and the oil is permitted to flow into the oil cylinder 22 refilling the latter ready for the next car. It will, of course, be understood that the amount of oil used may be determined and gaged by the stop 18 so that when the trip bar has moved up a short distance to strike the stop 18, but a small amount of oil will be supplied, while the greater the distance the trip bar has to move to strike the stop 18, the greater will be the amount of oil supplied.

While I have herein shown and described one particular embodiment of my invention, I wish it to be understood that I do not confine myself to all the precise details of construction herein set forth by way of illustration, as modification and variation may be made without departing from the spirit of the invention or exceeding the scope of the appended claims.

What I claim is:

1. The combination with a sliding support, of a member carried thereby and adapted to be contacted with by a wheel to be oiled to move the support, of an oil pipe carried by the sliding support, and having a nozzle adapted to discharge the oil into the wheel bearing, an oil cylinder located adjacent the sliding support, and a piston carried by the oil pipe and working in said cylinder, and means for returning the sliding support to its normally inoperative position.

2. The combination with a movable support, of an oil cylinder located adjacent thereto, a piston working in said cylinder, an oil pipe connected with the piston and carried by the movable support, said pipe terminating at its upper end in a discharge opening through which the oil is discharged to the bearing of the wheel to be oiled, means carried by the movable support adapted to be contacted with by the car wheel to move the support and cause the oil to be discharged from the cylinder through the oil pipe to the wheel, and means for returning the support to its normal position.

3. The combination with a movable support, of an oil pipe carried thereby and having a discharge end through which the oil is adapted to flow to the bearing of a wheel to be oiled, means carried by the movable support adapted to be contacted with by the wheel to be oiled to move the support and cause the oil to be discharged through the oil pipe, means for throwing said contact means out of contact with the wheel, and means for returning the movable support to its normal position.

4. The combination with a base, of a support sliding thereon, an oil pipe carried by the sliding support and terminating at one end in a piston and at its opposite end in a discharge nozzle adapted to discharge the oil to the bearing of the wheel to be lubricated, an oil cylinder arranged adjacent the base and within which the piston moves, a bar pivotally mounted on the support and terminating at one end in a contact member adapted to be struck by the car wheel to be oiled and to move the sliding support forward on its base, to cause the movement of the piston in the cylinder and discharge the oil to the wheel, tripping means for moving said contact member out of contact with the wheel after the latter has been oiled, and means for returning the sliding support to its normal position.

In testimony whereof, I affix my signature, in the presence of two witnesses.

CALVIN L. VAN NORSDALL.

Witnesses:

W. A. De Lapp,

Fred Wright.

Copies of this patent may be obtained for five cents each, by addressing the "Commissioner of Patents, Washington, D. C."