Oct. 11, 1932. C. F. SHERMAN 1,882,451

PUNCH PRESS

Filed Oct. 2, 1929 2 Sheets-Sheet 1

Fig. 1.

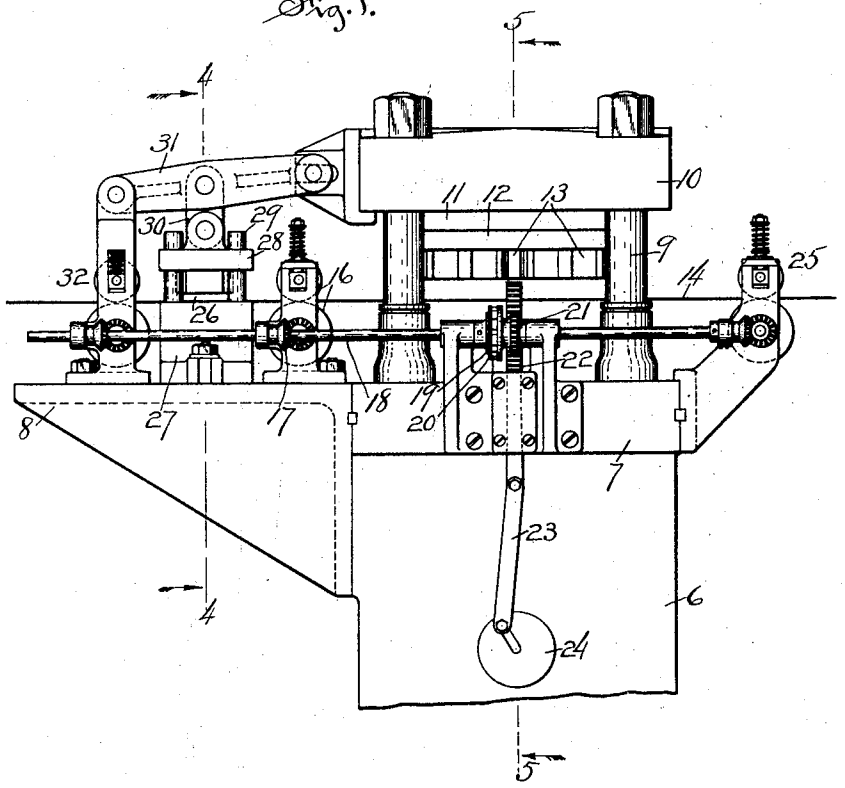

Fig. 2.

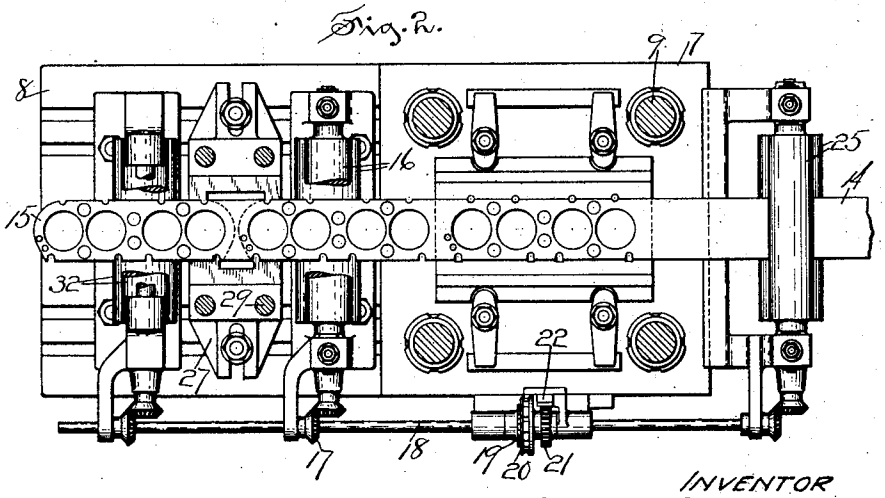

INVENTOR

Curtis F. Sherman

by

Arthur B. Jenkins,

ATTORNEY

Oct. 11, 1932. C. F. SHERMAN 1,882,451

PUNCH PRESS

Filed Oct. 2, 1929 2 Sheets-Sheet 2

Fig. 3.

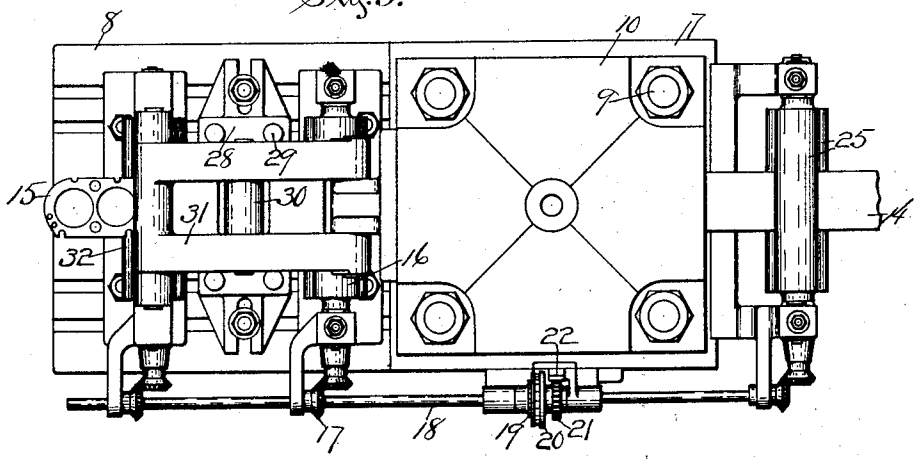

Fig. 4.

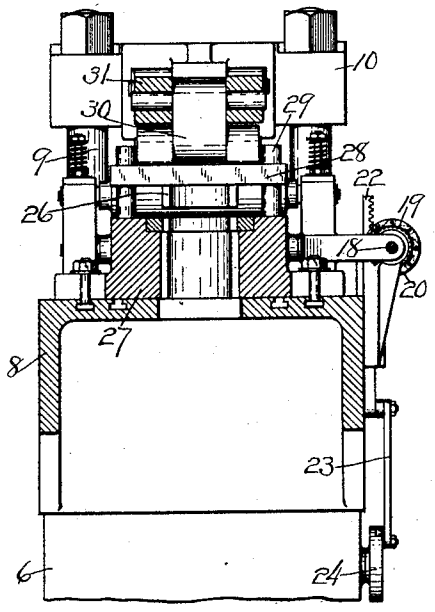

Fig. 5.

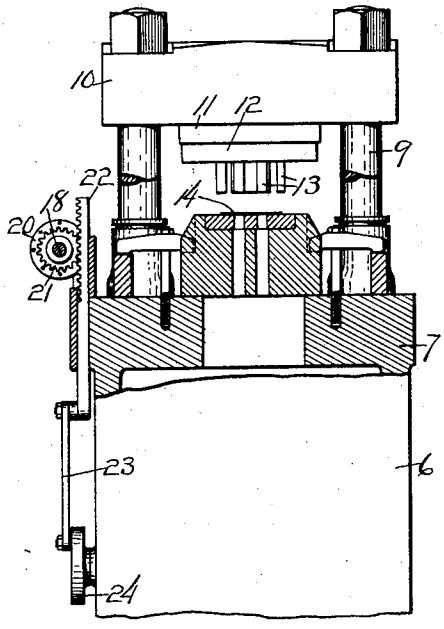

Fig. 6.

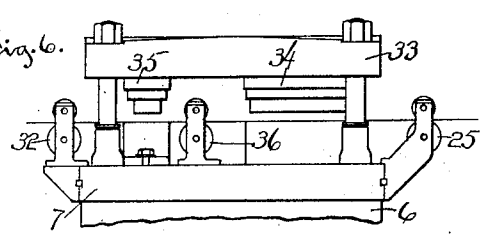

INVENTOR
Cortis F. Sherman,
by
Arthur B. Jenkins,
ATTORNEY

Patented Oct. 11, 1932 1,882,451

UNITED STATES PATENT OFFICE

CORTIS F. SHERMAN, OF HARTFORD, CONNECTICUT

PUNCH PRESS

Application filed October 2, 1929. Serial No. 396,718.

My invention relates to that class of machine which is employed for punching, stamping or performing other similar operations upon strips of material passed through the machine, and an object of my invention, among others, is the production of a machine of this type having effective means for feeding a strip of thin material for the operation thereon of dies, and with a minimum waste of such material.

One form of a machine embodying my invention, and in the construction and use of which the objects herein set out, as well as others, may be attained is illustrated in the accompanying drawings, in which—

Figure 1 is a side view of the machine embodying my invention, the lower part of the standard being removed.

Figure 2 is a view approximately on a plane of feed of stock through the machine, and with parts broken away to show construction.

Figure 3 is a top view of the machine.

Figure 4 is a view in vertical section on a plane denoted by the dotted line 4—4 of Figure 1.

Figure 5 is a similar view on a plane denoted by the dotted line 5—5 of Figure 1 as to the upper portion thereof, the lower portion being shown in full.

Figure 6 is a detail view on reduced scale illustrating a little different arrangement of the dies.

In the accompanying drawings the numeral 6 denotes the standard of my improved machine which may be of any ordinary construction, rising from a base (not shown) and having a bed 7 at its upper end with a continuation thereof in the form of a table 8, said bed and table being for the purpose of supporting dies and other parts of the mechanism. Posts 9, preferably four in number, extend upwardly from within the standard, said posts being connected to suitable mechanism within the standard for imparting lengthwise reciprocating movement to said posts, such mechanism being of any well-known construction and therefore not requiring a detailed description thereof herein. A head 10 is secured to the upper ends of said posts and this head is equipped with any suitable means, as a punch plate 11, for attachment of punches or dies employed in the operations of the machine. Said plate is secured to the head and a punch holder 12 is secured to the plate, said holder directly receiving punches 13 that are secured in place in any suitable manner, and that project therefrom for action upon sheets or strips 14 of material as they are fed through the machine.

It is common practice, in machines of this type, to push the strips of material toward the dies or punches, but extremely thin material is caused to "buckle" in this pushing operation, and in order to avoid this result a margin is frequently left on one or both edges of the strip to stiffen it and thereby prevent its "buckling".

My improved machine, forming the subject matter of this application, in constructed to avoid the objectionable result just related and a strip of material of minimum thickness, of the exact width required and of little stability, owing to the large amount of metal removed by the punches and dies, may be effectively passed through the machine. In effecting this result I draw or pull the strip 14 through the machine instead of causing it to be pushed through. I have selected, for the purpose of illustration herein, the formation of gaskets 15 that are commonly employed as packings for the heads of the cylinders of explosive engines, these being articles in which a large part of the material is removed by the action of the punches.

In effecting my purpose I provide a set of feed rolls 16 between which the stock 14 passes, these rolls acting to draw the strip by a step-by-step movement after the successive operation of the punches upon it. The rolls may be actuated in any suitable manner, in the construction herein shown the lower roll being positively driven and the upper roll being driven by contact with the strip of material between the rolls, said upper roll being spring pressed against said strip, as shown in Figure 1 of the drawings. A bevel gear on the lower roll meshes with a bevel pinion 17 secured to a roll driving shaft 18 mounted

in bearings on the machine and having a step-by-step rotation imparted to it by means of a ratchet wheel 19 secured to the shaft and acting in connection with a set of pawls each pivotally mounted in a pawl carrier 20 freely rotatable on the shaft 18. A driving pinion 21 is rigidly secured to said carrier and its teeth mesh with the teeth of a rack 22 of a rack bar mounted for reciprocating movement in the machine.

Said bar is pivotally connected with a pitman 23 at one end thereof, the opposite end of said pitman being pivotally connected with a crank pin adjustably mounted in a slot in a crank disk 24, as shown in Figure 1 of the drawings. Said disk is operatively connected with the mechanism within the standard and hereinbefore referred to. Any other suitable means for operating the shaft 18 may, however, be employed and I do not, therefore, confine myself to the mechanism herein set out.

In order to avoid stretching or other distortion of the strips of material which might be caused by reason of the pull thereon by the rolls 16 to unwind the strips from the supply rolls upon which they are commonly wound, the liability to which stretching is increased after the strip has been acted upon and weakened by removal of large portions thereof by the action of the dies and punches, I provide a set of supply feed rolls 25 mounted in front of the punches, these rolls being connected for operation by the shaft 18 in a manner similar to that hereinbefore described with respect to the rolls 16, and for which reason a further and detailed description is omitted, it being remarked that the rolls 25 travel at practically the same speed as the rolls 16.

A set of cutting dies 26 is located on the table 8 behind the feed rolls 16, the lower die being secured to the table in any ordinary manner, as by means of a die-bed 27 removably fastened in place. The upper die member or punch is secured to a die-head 28 mounted for vertical reciprocating movement on pillars 29 projecting upwardly from the bed 27. The head 28 is connected by a link 30 with a punch actuating lever 31 pivotally mounted at one end in the frame of a set of blank feeding rolls 32, the opposite end of said lever being pivotally attached, as by a pin and slot connection with the head 10 of the main part of the press. The dies 26 are shaped to give proper form to the ends of the blanks, as the gaskets 15, as they are severed from the main strip, and the rolls 32 remove said blanks after they are cut off. The rolls 32 are driven from the driving shaft 18, being connected thereto in a manner similar to that hereinbefore described with respect to the rolls 16.

It will be noted that each downward movement of the head 10 effects the cutting and punching operations upon the strip 14, and at the same time the movement of the head 10 actuates the lever 31 and thereby severs a blank 15 from the end of the strip previously operated upon by the dies and punches, in the construction herein shown, there being a blank between the one being operated upon by the dies and punches and the one being severed by the cutting dies. The feed mechanism is arranged to position the pawls for a feeding movement of the shaft 18, said positioning taking place during a downward movement of the head 18, and the feed taking place as said head moves upwardly.

While the second set of dies 26 is illustrated herein as forming the ends of the blanks as the completed blank is severed from the strip, it will be understood that the second set of dies need not necessarily be confined to a formation of the end of the blank but may be constructed to perform operations upon the blank other than those which result in the severing of the completed blank from the strip.

The supply feed rolls act to draw the strip from the supply roll to the point of location of said feed rolls, and the feed rolls 16 act to draw the strip 14 underneath the punches and dies. This removes any cause for strain upon said strip and avoids any distortion of the blank, particularly after it has been cut by the action of the dies and punches. The feed rolls 16 push the perforated blank up to the cutting dies, but this distance is so short that the strip is able to withstand the pushing action and is therefore presented to the cutting dies 26 without deformation.

Mention has been made herein of the operation upon a strip supplied from feed rolls, this contemplating a strip of considerable length. It often happens that the strips being operated upon are comparatively short. To adapt the machine for use upon such comparatively short pieces and without waste of stock or material the rolls 16 and 32 are adjustably mounted upon the table 8 as hereinafter described for the purpose of locating said rolls at a distance apart not greater than the lengths of pieces to be produced by the machine.

It will be observed that should the distance between the rolls 16 and 32 be greater than the lengths of the pieces being produced by the machine when the end of the strip passes from the grip of the rolls 16 there would be nothing to feed the strip up to the proper position underneath the dies 26 and the latter would therefore mutilate the last piece in the strip instead of completing its formation. With the rolls arranged as shown in Figure 2 it will be seen that each section of the strip to constitute a completed article will be within the grip of the rolls 32 before the grip of the rolls 16 is released therefrom.

In the machine illustrated and described

herein the dies for performing the second operation constitute an auxiliary unit located apart from the punch carrying head but operated thereby. I do not, however, intend that my invention shall be limited to a machine in which the dies are thus arranged, as it will be obvious that the second operation of the dies need not of necessity be separate and apart from the punch carrying head, but in any event, it will be further of advantage to locate the rolls as herein shown and particularly those between the punch carrying head and the second operation die.

Such a machine is illustrated in Figure 6 in which the head 33 supports both the punch dies 34 and the second operation dies 35. The feed rolls, however, are arranged relatively to the dies in the same manner as hereinbefore described, the feed rolls 36 for drawing the strip to the dies to perform the first operation being located underneath the head 33. The operation of this form of the machine is the same, however, as that hereinbefore described.

In both of the structures shown herein the dies for performing the second operation and the feed rolls adjacent thereto are adjustably mounted in the table 8, as by means of bolts with T-heads fitting T-shaped grooves, and as shown particularly in Figures 3 and 4 of the drawings.

In accordance with the provision of the patent statutes I have described the principles of operation of my invention, together with the device which I now consider to represent the best embodiment thereof; but I desire to have it understood that the device shown is only illustrative, and that the invention may be carried out by other means and applied to uses other than those above set out.

I claim—

1. A punch press including a frame with a reciprocating plunger mounted therein, punches carried by said plunger to operate upon a strip for substantially the full width thereof and thereby materially weaken the same, a set of feed rolls mounted in rear of said plunger and operating to draw a strip of stock underneath and past said plunger, a set of feed rolls located in front of said plunger for advancing said strip of stock from a supply roll, means for varying the distance between said sets of feed rolls and between the plunger and one of said sets, and means for operating said sets of feed rolls.

2. A punch press including a frame with a reciprocating plunger mounted therein, means for feeding a strip of stock underneath and past said plunger, and cutting mechanism located in rear of said plunger and including an actuating member pivotally attached to said plunger.

3. A punch press including a frame with a reciprocating plunger including a head mounted therein, means for feeding a strip of stock underneath and past said plunger, and a cutting mechanism located in rear of said plunger and including an actuating lever pivotally mounted at one end and pivotally attached at its other end to said head.

4. A punch press including a frame with a reciprocating plunger mounted therein, means for feeding a strip of material underneath and past said plunger, a cutting mechanism located in rear of said plunger, a set of feed rolls located in rear of said cutting mechanism, and an actuating lever for said cutting mechanism, one end of said lever being pivotally supported by the frame for said feed rolls and the other end of said lever being pivotally attached to said plunger.

5. A punch press including a frame with a reciprocating plunger mounted therein, a set of feed rolls located in rear of said plunger for drawing a strip of stock underneath and past said plunger, a cutting mechanism located in rear of said feed rolls, a set of feed rolls located in rear of said cutting mechanism, means to adjustably space said feed rolls a distance apart not greater than the length of articles being produced by the press, and means for operating said cutting mechanism.

6. A punch press including a frame with a reciprocating plunger mounted therein, a set of feed rolls located in rear of said plunger to draw a strip of stock underneath and past said plunger, a cutting mechanism located in rear of said feed rolls to sever a blank from said stock, a set of feed rolls located in rear of said mechanism to move said blanks away from said mechanism, said last mentioned rolls being spaced from the other set of feed rolls a distance not greater than the length of the articles being produced in the press, and means for operating said cutting mechanism.

7. A punch press including a frame with a reciprocating plunger mounted therein, a set of feed rolls located in rear of said plunger, a die bed located in rear of said feed rolls, pillars rising from said die bed, a die head mounted for reciprocating movement on said pillars, a set of feed rolls located in rear of said die bed, an operating lever pivotally supported by the frame of the feed rolls in rear of said die bed and extending over said bed and attached at its opposite end to said plunger, and an operative connection between said lever and die head.

8. A punch press including a frame with a reciprocating plunger mounted therein, a set of feed rolls located in front of said plunger, a set of feed rolls located in rear of said plunger to draw a strip of stock underneath and past the plunger, a cutting mechanism located in rear of the last mentioned set of feed rolls, a set of feed rolls located in rear of said cutting mechanism and spaced from the last mentioned set of rolls a distance not greater than the length of the articles being

produced in the press, means for operating said cutting mechanism, and means for operating said feed rolls.

9. A machine for producing shaped parts from strip material wherein the width of the finished piece and width of the strip material are substantially the same, said machine including a plurality of dies, a set of feed rolls in front of the first die to feed the material to said die for operation thereon, a set of feed rolls between the first and second dies for feeding the material from the first die to said second die for operation thereon by the latter, means for varying the distance between said sets of feed rolls, a set of feed rolls at the rear of the second die for feeding material from the latter, said last mentioned rolls being spaced from the other set of feed rolls a distance not greater than the length of the articles being produced in the press and means for imparting movement to the feed rolls.

10. A machine for producing shaped parts from strip material wherein the width of the finished parts and the width of the strip material are substantially the same, said machine comprising a punch press, a plurality of dies, a set of feed rolls in front of the first die to feed the material to the latter for operation thereon, a set of feed rolls between the first and the second die for feeding the material from the first die to said second die for operation thereon by the latter, a set of feed rolls at the rear of the second die for feeding the material from the latter die, means for varying the distance between the two sets of feed rolls to space them a distance apart not greater than the length of articles being produced by the press, means for imparting movement to the feed rolls, and means for varying the distance between the dies.

11. A machine for producing shaped parts from strip material, said machine comprising a punch press and including a die for preliminary operation on the strip material, a set of feed rolls for feeding the strip material to the said die, a second die for completing the operation and severing the finished object from the strip of material, a set of feed rolls located between said dies for feeding the material from the former to the latter, a set of feed rolls located at the rear of the last mentioned die for removing the finished objects therefrom, means for imparting movement to said rolls, means for varying the distance between the sets of feed rolls to space them a distance apart not greater than the length of articles being produced by the press, and means for varying the distance between the dies.

CORTIS F. SHERMAN.