March 31, 1931. S. MOE ET AL 1,798,850

DAMPENING DEVICE FOR PLATE CYLINDERS IN OFFSET PROCESS PRINTING PRESSES

Filed Nov. 18, 1929 2 Sheets-Sheet 1

Fig. 1.

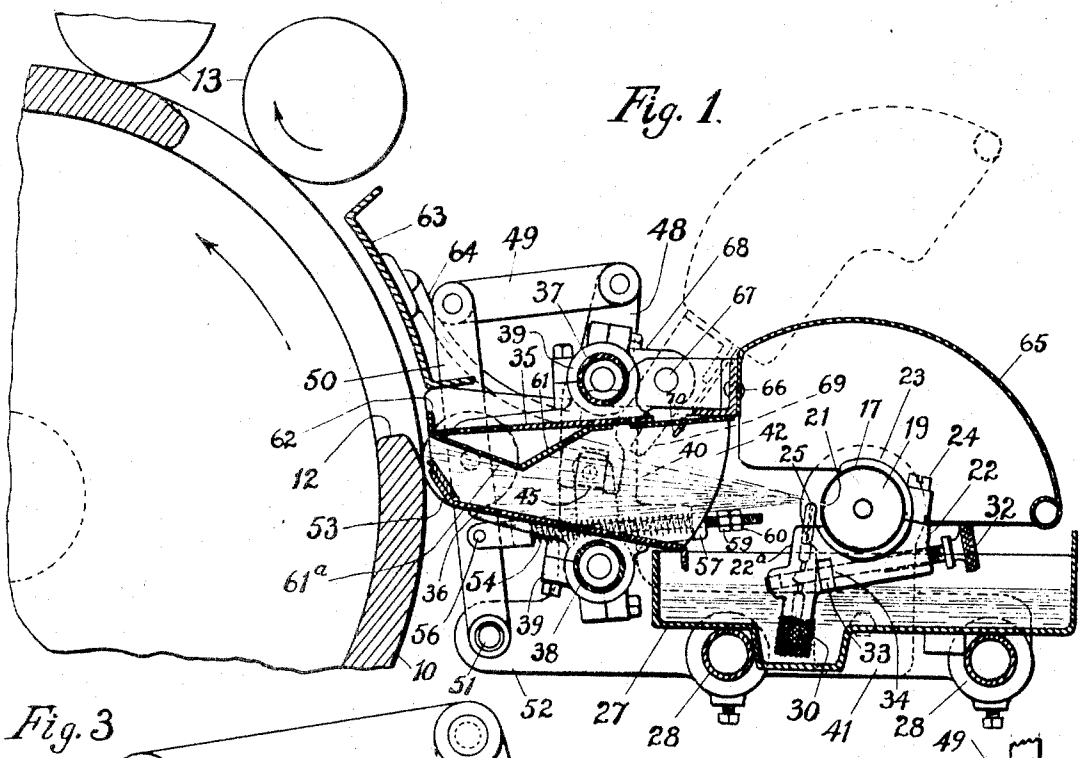

Fig. 3

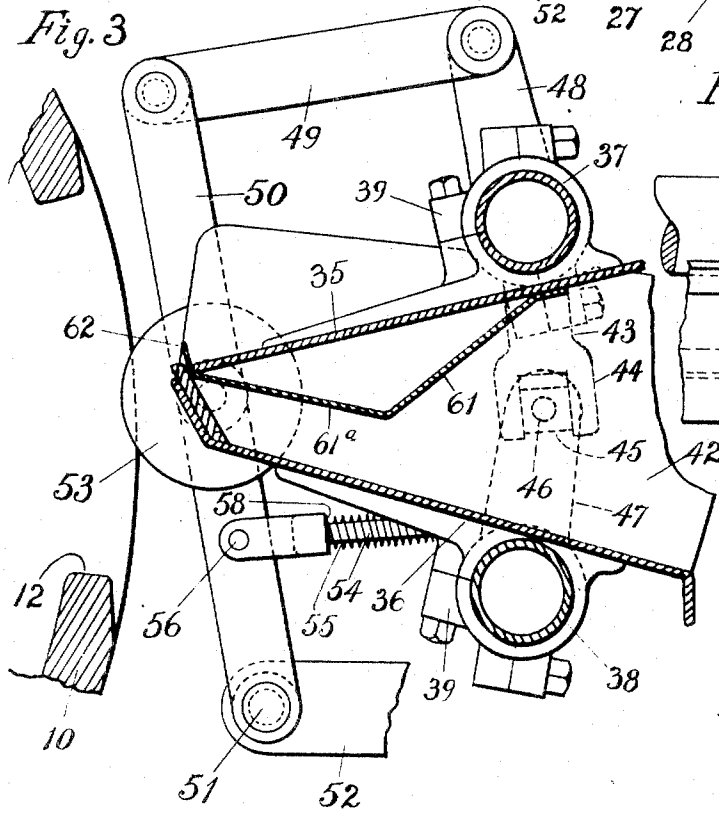

Fig. 4

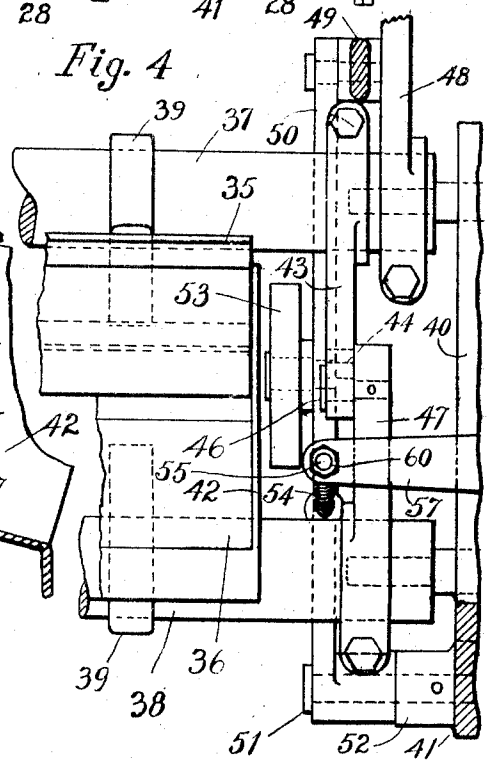

INVENTORS.
SIVERT MOE.
SIGURD A. MOE.
BY Arthur L. Brinkle
ATTORNEY

March 31, 1931. S. MOE ET AL 1,798,850

DAMPENING DEVICE FOR PLATE CYLINDERS IN OFFSET PROCESS PRINTING PRESSES

Filed Nov. 18, 1929 2 Sheets-Sheet 2

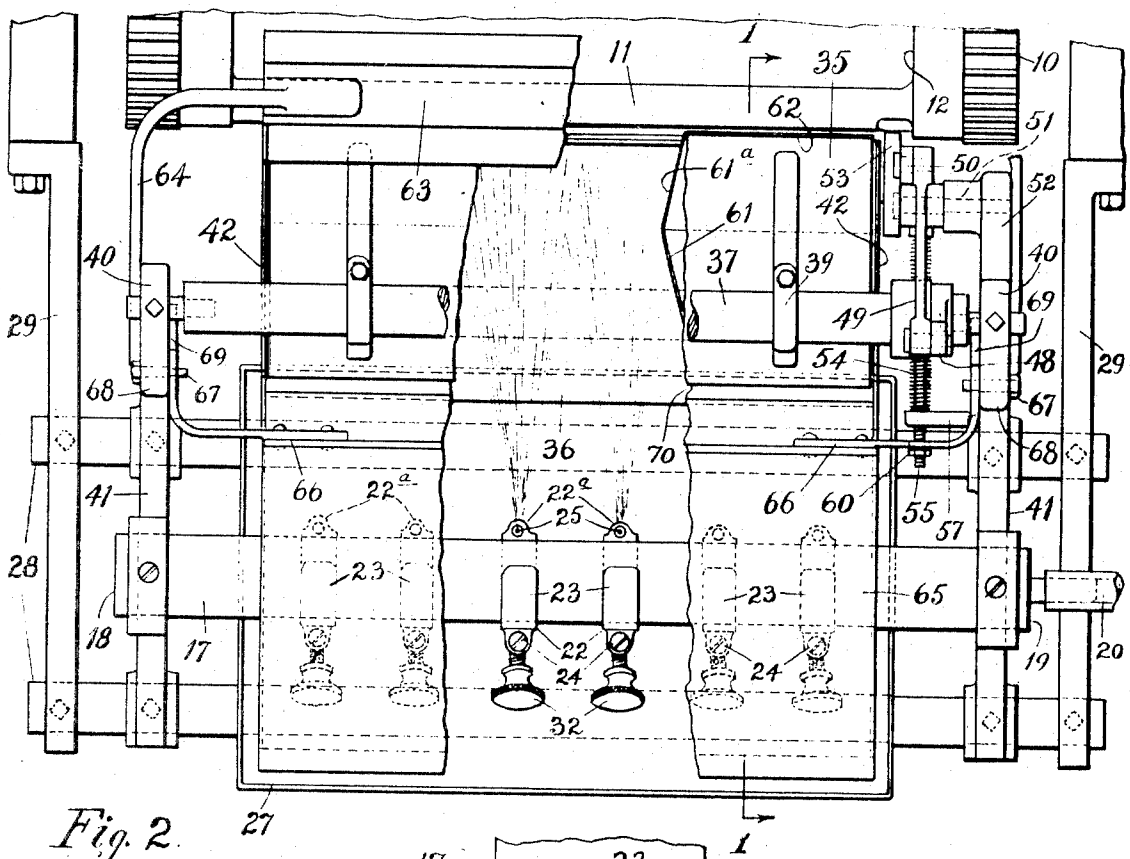

Fig. 2.

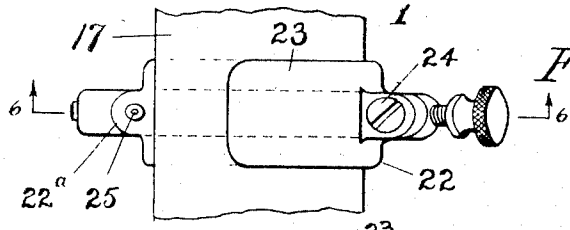

Fig. 5

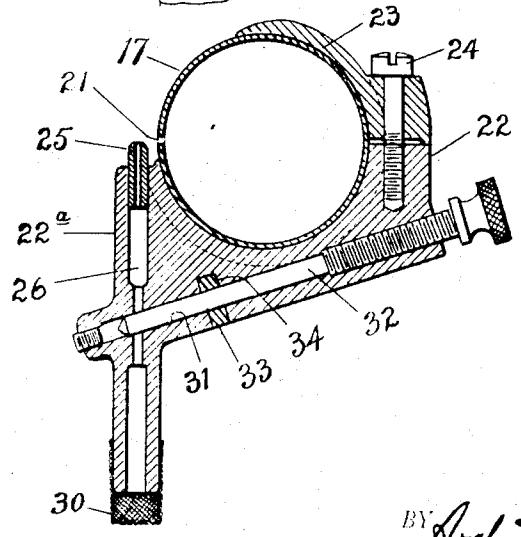

Fig. 6.

INVENTORS.
SIVERT MOE.
SIGURD A. MOE.
BY Arthur L. Sprinkle
ATTORNEY

Patented Mar. 31, 1931

1,798,850

UNITED STATES PATENT OFFICE

SIVERT MOE AND SIGURD A. MOE, OF CHICAGO, ILLINOIS

DAMPENING DEVICE FOR PLATE CYLINDERS IN OFFSET-PROCESS PRINTING PRESSES

Application filed November 18, 1929. Serial No. 407,824.

This invention relates to offset process printing presses, and particularly to means for dampening the plate cylinders thereof.

One of the objects of the present invention is to provide a simple, practicable and efficient device for applying moisture to the plate cylinder in the form of a very fine spray or mist.

Another object of the invention is to provide a simple and novel construction and arrangement whereby the application of moisture to various portions of the cylinder may be controlled as desired.

Another object of the invention is to provide automatically actuated means for controlling the application of moisture in a manner to prevent its entering the gap or open portion formed in the face of the plate cylinder.

A further object of the invention is to provide a structure whereby the area of the cylinder to which the moisture is applied may be varied as desired, and wherein any excess of moisture resulting from the operation of the device may be returned to its source of supply.

A still further object of the invention is to improve devices of the character disclosed in sundry details hereinafter described and particularly pointed out in the appended claims.

One embodiment of the invention is shown for illustrative purposes in the accompanying drawings, in which

Fig. 1 is a sectional elevation through a portion of an offset process printing press illustrating the application of our improved cylinder dampening device thereto, and taken approximately as indicated by the line 1—1 of Fig. 2.

Fig. 2 is a plan view illustrating substantially the arrangement of parts shown in Fig. 1.

Fig. 3 is an enlarged fragmentary sectional elevation of a portion of Fig. 1, illustrating a changed position of the automatically actuated means for preventing the moisture from entering the gap or open portion formed in the face of the plate cylinder.

Fig. 4 is a side elevation of Fig. 2.

Fig. 5 is a plan view of one of the spray nozzles and its supporting bracket.

Fig. 6 is a sectional elevation of the nozzle and bracket illustrated in Fig. 5 and taken as indicated by the line 6—6 thereof.

In the accompanying drawing only so much of an offset process printing press has been shown as is thought necessary for a clear understanding of the present invention, and, in the illustrative embodiment, comprises a plate cylinder 10 to the outer surface of which an etched plate 11 (Fig. 2) is attached, the said cylinder being provided with a gap or opening 12 in its periphery to admit of the positioning of the clamping or other suitable means (not shown) within the body of the cylinder 10 for securing the etched plate thereto.

Suitably positioned in a manner to co-operate with the plate 11 are a plurality of inking rollers 13 (Fig. 1) for applying inks of different colors to said plate, and, as is well understood in printing presses of the offset process type, a blanket cylinder or roller (not shown) is provided, which is adapted also to co-operate with the plate 11 in a manner to receive the ink applied to the plate and transfer it to the paper or other material to be printed.

The structure above described being common in offset process printing presses, further detailed showing has been omitted from the drawings to facilitate the showing of features embodying the present invention.

For dampening the plate 11, as is common practice in the operation of printing presses of the character described, we have devised a novel construction and arrangement of elements for applying water to the plate 11 and cylinder 10 in the form of a very fine spray or mist, which consists of a tube 17 having a closed end portion 18 and having its opposite or open end portion 19 connected, by means of a hose or pipe 20, with an air compressor or other suitable means for supplying air under pressure to the tube 17.

Suitably spaced longitudinally along one side of the tube 17 are a plurality of outlet ports 21, clearly shown in Figs. 1 and 6, and adjustably mounted on the tube 17 at inter-

vals corresponding to the spacing of the ports 21, are a plurality of brackets 22 adapted to be secured to the tube 17 in fixed relation thereto by means of clamps 23 and clamping screws 24.

Suitably mounted with respect to the tube 17, preferably in lugs 22*a* formed on the brackets 22, are a plurality of preferably short pipes or nozzles 25 communicating with bores 26 formed in the lugs 22*a*, the lower end portions of the bores being submerged in the water of a supply tank or reservoir 27 mounted on cross bars 28 suitably positioned in a pair of frame members 29, the upper or discharge ends of the nozzles 25 being positioned adjacent the air outlet ports 21 and substantially in the plane of passage of the air discharged from said ports, in a manner to cause the air under pressure from the ports 21 to pass over or across the open end of the nozzle 25 in a direction substantially at right angles to the axial line of the nozzle, thereby creating a vacuum at the upper end of the nozzle for drawing water from the tank 27 and forcing it in the form of a fine spray or mist against the cylinder 10 and plate 11. For preventing the entrance of foreign matter into the bores 26 the submerged or lower end portions of the bores may be covered with strainers or screens 30 of very fine mesh, thereby protecting the nozzles 25 against clogging and consequent interference with the efficient operation of the device.

For controlling the passage of water through the bores 26, each of the brackets 22 is provided with a valve chamber 31, shown, in the present instance, as extending substantially transversely to the axial line of the bore 26 and communicating therewith, the said chamber being adapted to receive the lower or inner end of a longitudinally movable valve 32, having screw threaded engagement with the bracket 22, whereby the valve may be adjusted into or out of co-operative relationship with the bore 26. In as much as the valves 32 are mounted in a manner to be operated independently of each other, it will be observed from the foregoing description that the application of moisture to various portions of the plate 11 may be effectively and selectively controlled, or, if desired, may be shut off entirely merely by manipulating the valves 32 to adjust their inner end portions into a position to close the bore 26 and prevent the passage of water therethrough.

For preventing the entrance of atmospheric pressure to the bores 26 packing rings 33 of resilient material, such, for example, as rubber or the like, are positioned, while under compression between portions of the brackets 22 as in slots or notches 34 formed in the brackets, and in a manner to surround the stems of the valves 32.

For preventing moisture from entering the gap or opening 12 in the plate cylinder 10 during the operation of the machine, a plurality of deflector members or plates 35 and 36 are adjustably secured to oscillating supporting shafts or bars 37 and 38, respectively, by means of split brackets 39, the said shafts or bars being pivotally mounted at their opposite ends in upwardly extending bearing portions 40 formed on supplemental frame members 41 slidably mounted on the cross bars 28 in a manner to be adjusted longitudinally thereof.

Carried, preferably by the deflector plate 36 or formed integrally therewith, adjacent the ends thereof, are a pair of side walls 42 adapted to cooperate with the upper and lower deflector plates 35 and 36, respectively, in a manner to form a throat for directing the moisture or mist from the spraying device toward the plate cylinder 10.

For connecting the deflector plates 35 and 36 in a manner to cause them to move simultaneously away from and toward each other to permit or prevent the application of moisture to the plate cylinder 10, the shaft 37 is provided adjacent one of its end portions with a downwardly extending arm 43 adjustably secured to the shaft 37 and having its lower end portion forked as indicated at 44 in a manner to receive a sliding block 45 pivotally mounted on a stud 46 adjacent the upper end of an arm 47 adjustably secured to the shaft 38 on which the lower deflector plate 36 is mounted.

For oscillating the shafts 37 and 38 in their bearings in a manner to actuate the deflector plates 35 and 36 is an arm 48, adjustably secured, preferably to one of the end portions of the shaft 37, the upper or free end of the arm 48 being pivotally connected to one end of a link 49, the opposite end of which is pivotally connected to the upper or free end of an arm 50, pivotally mounted at 51 on an extension 52 formed on one of the supplemental frame members 41. Rotatably mounted on one side of the arm 50 and intermediate the ends thereof is an anti-friction roller 53 adapted to engage the surface of the plate cylinder 10 in a radial plane passing through the cylinder within the longitudinal limits of the gap or opening 12 formed in the cylinder as shown in Figs. 2 and 3, or, in other words, positioned in a manner to enter the gap 12 when the open side of the cylinder is adjacent the roller or dampening device, as illustrated in Fig. 3, and for urging the roller toward the cylinder to insure the proper functioning of the plates 35 and 36 suitable resilient means, such, for example, as a spring 54, may be employed, and as shown in Figs. 1 to 4 inclusive of the drawings, may be positioned around a rod 55 pivotally connected at 56 to the arm 50 and slidably mounted in a lug 57 formed on one of the upwardly extending bearing portions

40, the spring 54 acting between the lug 57 and a shoulder 58 formed on the rod 55 in a manner to urge the roller 53 and upper end of the arm 50 toward the plate cylinder 10.

It will be observed from the foregoing description that as the gap 12 or open side of the cylinder 10 approaches the moistening device the roller 53, by reason of its longitudinal position with respect to the plate cylinder and the urging of the spring 54 will enter the gap 12 and through the connections of the arm 50 with the deflector plates 35 and 36 will cause the plates to assume the position illustrated in Fig. 3, thereby causing the spray or mist from the nozzles 25 to be deflected onto the plate 36 by which the moisture will be returned to the supply tank 27. This position of the plates 35 and 36 will be maintained during the passage of the gap 12 past the moistening device and as the forward edge of the plate cylinder surface engages the roller 53 in a manner to move it outwardly, the shafts 37 and 38 will be rocked in a manner to move the plates 35 and 36 to the position shown in Fig. 1, thereby permitting the spray or mist from the nozzles 25 to be directed against the plate 11 secured to the surface of the cylinder 10. The rod 55 is provided at its outer or free end portion with screw threads adapted to receive an adjusting nut and lock nut 59 and 60, respectively, by which the roller 53 may be adjusted toward or away from the center of the plate cylinder 10 in a manner to cause a greater or lesser movement of the roller 53 when engaged by the surface of the cylinder, thereby providing an opening of greater or lesser degree between the co-operating edges of the plates 35 and 36, thus varying the area of the plate cylinder surface exposed to the application of moisture from the spraying device.

It will be observed from the foregoing description that by reason of the mobility of both the upper and lower detector plates 35 and 36, the plates may be actuated with a relatively small movement of the roller 53 which contributes materially to the smoothness of operation of the device. Furthermore, that the relative adjustability of the plates 35 and 36, arms 43, 47, 48 and 50, together with the roller 53 provides means for producing most desirable and efficient co-operation of the forward or co-operating edges of the plates.

For preventing the accumulation of moisture adjacent the forward edge of the plate 35, a longitudinally extending baffle 61 of wide V-shaped cross section is secured to the plate 35 in a manner to extend from a point adjacent the forward edge of the plate to a point substantially toward the rear edge thereof, the forward leg portion 61*a* of the baffle providing a surface down which water from the forward edge of the plate 35, when in contact with the co-operating edge of the plate 36, may drain to the angle of the V, from which it will drop onto the lower deflector plate 36 and be returned thereby to the supply tank 27.

The lower front edge of the top plate 35 adjacent the cylinder 10 is provided with an upstanding flange portion 62 which may be formed, as shown, by an extension of the portion 61*a* of the baffle 61 for preventing the accumulation of water by capillary attraction on top of the plate 35, which would be most objectionable, in that, if sufficient water accumulated it would be deposited on the cylinder 10 in quantities undesirable in a device of the character described. In the present instance any water that might by any chance accumulate on top of the plate 35 will be drained laterally to the side edges of the plate and on to the plate 36 and thence to the supply tank 27.

For confining the spray or mist adjacent the surface of the plate cylinder 10 a plate or guard 63 may be suitably positioned adjacent the cylinder above the co-operating edges of the plates 35 and 36, and supported in such position by brackets 64 secured to the supplemental frame members 41.

For protecting the spraying device and supply tank 27 from the accumulation of dust or the like, and for preventing foreign matter from entering the spray applied to the plate cylinder 10, a cover member or hood 65 may be provided and secured to a supporting frame member 66 pivotally mounted at 67 on ears or lugs 68 carried by the upwardly extending bearing portions 40 of the supplemental frame members 41, the end portions of the members 66 being extended beyond the pivotal connections 67, as indicated at 69 (Figs. 1 and 2) in a manner to engage the underside of the shaft 37 and provide a support for the hood 65 in its operative position. Operatively connected to the hood 65 in a manner to move therewith is a plate 70 adapted to co-operate with the upper deflector plate 35 in a manner to form a continuation of the throat formed by the side walls 42 and plates 35 and 36, thereby providing additional means for effectually directing the spray or moisture toward the plate cylinder 10.

It will be observed from the foregoing specification that the present invention provides a device for applying moisture to plate cylinders in a form of exceptionally fine spray or mist, and wherein the application of moisture to various portions of the cylinder may be controlled. Also that our invention provides automatically actuated means for preventing the moisture from entering the gap formed in the plate cylinder and means for varying, as desired, the area of the surface of the cylinder to which moisture is applied.

Obviously, the present invention is not limited to the precise construction and ar-

rangement shown and described, as the same may be variously modified. Moreover, all the features of the invention need not be used conjointly, as the same may be used to advantage in variously different combinations and subcombinations.

What we claim as our invention and desire to secure by Letters Patent is:

1. In an offset process printing press, the combination with a rotatable plate cylinder having a gap formed in the periphery thereof, of a device for spraying moisture on said cylinder, and a plurality of movable co-operating members for preventing the entrance of moisture into said gap as the cylinder is rotated.

2. In an offset process printing press, the combination with a rotatable plate cylinder having a gap formed in the periphery thereof, of a device for spraying moisture on said cylinder, and a plurality of automatically actuated co-operating members for preventing the entrance of moisture into said gap as the cylinder is rotated.

3. In an offset process printing press, the combination with a rotable plate cylinder having a gap formed in the periphery thereof, of a device for spraying moisture on said cylinder, and a plurality of automatically actuated members movable in opposite directions with respect to each other for preventing the entrance of moisture into said gap as the cylinder is rotated.

4. In an offset process printing press, the combination with a rotatable plate cylinder having a gap formed in the periphery thereof, of a device for spraying moisture on said cylinder, a plurality of pivotally mounted automatically actuated co-operating members adapted to be positioned between said cylinder and spraying device and movable in opposite directions with respect to each other for preventing the entrance of moisture into said gap as the cylinder is rotated, and means co-operable with said cylinder for actuating said member.

5. In an offset process printing press, the combination with a rotatable plate cylinder having a gap formed in the periphery thereof, of a frame, a device mounted on said frame for spraying moisture on said cylinder, a plurality of deflector plates movably mounted on said frame and co-operable in a manner to prevent the entrance of moisture into said gap, and means carried by one of said plates for preventing the accumulation of moisture adjacent the edge of said upper plate.

6. In an offset process printing press, the combination with a rotatable plate cylinder having a gap formed in the periphery thereof, of a frame, a device mounted on said frame for spraying moisture on said cylinder, upper and lower deflector plates pivotally mounted on said frame and co-operable with each other in a manner to prevent the entrance of moisture into said gap, means carried by the upper plate for preventing the accumulation of moisture on the edge of said upper plate, and means co-operable with said cylinder for actuating said plates.

7. In an offset process printing press, the combination with a rotatable plate cylinder having a gap formed in the periphery thereof, of a frame, a device mounted on said frame for spraying moisture on said cylinder, upper and lower deflector plates pivotally mounted on said frame and co-operable with each other in a manner to prevent the entrance of moisture into said gap, means for adjusting the position of said plates with respect to each other, means co-operable with said cylinder for actuating said plates, and means for adjusting said actuating means with respect to said plates.

8. In an offset process printing press, the combination with a rotatable plate cylinder having a gap formed in the periphery thereof, of a frame, a device mounted on said frame for spraying moisture on said cylinder, upper and lower deflector plates movably mounted on said frame and co-operable with each other in a manner to prevent the entrance of moisture into said gap, means carried by said upper plate for preventing the accumulation of moisture adjacent the edge thereof, means for preventing the accumulation of moisture on top of said plate, means for adjusting the position of said plates with respect to each other, means pivotally mounted on said frame and co-operable with said cylinder for actuating said plates, and means for adjusting said actuating means with respect to said plates.

9. In an offset process printing press, the combination with a rotatable plate cylinder having a gap formed in the periphery thereof, of a frame, a device mounted on said frame for spraying moisture on said cylinder said device having a source of water supply associated therewith, a plurality of supporting bars rotatably mounted in said frame, an upper deflector plate adjustably secured to the other of said bars for directing moisture toward said cylinder and for returning excess moisture to said source of supply, co-operating arms adjustably secured to the respective bars, and means co-operable with said cylinder and adjustably connected to one of said bars for rocking the bars in a manner to cause said plates to move away from each other and permit moisture to be sprayed onto said cylinder and to approach each other in a manner to prevent moisture from entering said gap as the cylinder is rotated.

10. In an offset process printing press, the combination with a rotatable plate cylinder having a gap formed in the periphery thereof, of a frame, a device mounted on said

frame for spraying moisture on said cylinder, upper and lower deflector plates pivotally mounted on said frame, a source of water supply associated with said spraying device, side walls co-operable with said upper and lower deflector plates in a manner to form a throat for directing moisture from said spraying device toward said cylinder, and a hood adapted to be positioned over said spraying device and said source of supply.

11. In an offset process printing press, the combination with a rotatable plate cylinder having a gap formed in the periphery thereof, of a frame, a device mounted on said frame for spraying moisture on said cylinder, upper and lower deflector plates pivotally mounted on said frame, a source of water supply associated with said spraying device, side walls movable with one of said plates and co-operable with both said upper and lower deflector plates in a manner to form a throat for directing moisture from said spraying device toward said cylinder, a hood pivotally mounted on said frame and adapted to be positioned over said spraying device and said source of supply, means carried by said hood and co-operable with one of said deflector plates in a manner to form a continuation of said throat, and means co-operable with said cylinder for actuating said plates.

12. In an offset process printing press, the combination with a plate cylinder having a gap formed therein, means for applying moisture to said cylinder comprising a source of water supply, a plurality of nozzles communicating therewith, means for directing air under pressure past the discharge ends of said nozzles for drawing water from said source of supply and directing it toward said cylinder in the form of a fine spray or mist, means for controlling the passage of water to said nozzle, and a plurality of pivotally mounted automatically actuated members for preventing the entrance of moisture into said gap as the cylinder is rotated.

13. In an offset process printing press, the combination of a plate cylinder having a gap formed therein, means for applying moisture to said cylinder comprising a source of water supply, a plurality of nozzles communicating therewith, means for directing air under pressure past the discharge ends of said nozzles for drawing water from said source of supply and directing it toward said cylinder in the form of a fine spray or mist, means for controlling the passage of water to said nozzles comprising a plurality of brackets adjustably mounted on said air directing means and having bores formed therein communicating with said nozzles and said source of water supply, filtering means positioned adjacent the receiving ends of said bores, valve stems adjustably mounted in said brackets and co-operable with said bores for controlling the passage of water therethrough, resilient packing rings positioned between portions of said brackets and around said stems for preventing the entrance of atmospheric pressure to said bores, and automatically controlled means for preventing the entrance of moisture into said gap as the cylinder is rotated.

In testimony whereof we have signed our names to this specification, on this 13th day of November, A. D. 1929.

SIVERT MOE.
SIGURD A. MOE.