July 29, 1958 W. BERTHOLD 2,845,563

BEAM GENERATING SYSTEM

Filed Nov. 5, 1953

FIG. 1.

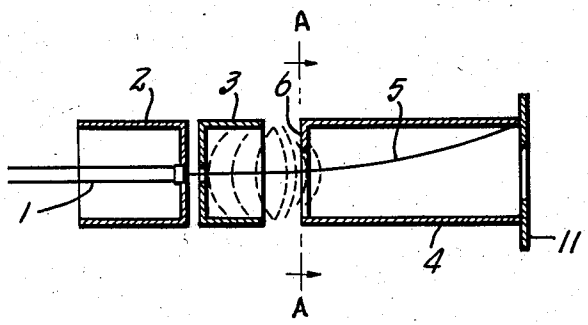

FIG. 2.

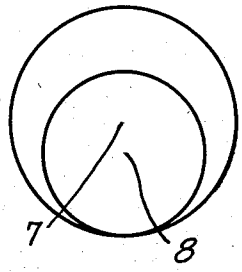

FIG. 4.

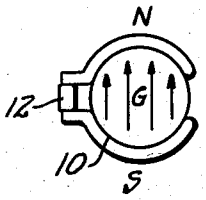

FIG. 3.

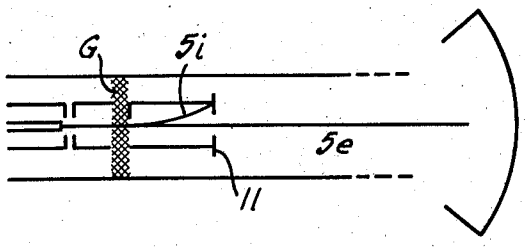

INVENTOR.
W. BERTHOLD
BY R. P. Morris
ATTORNEY

United States Patent Office

2,845,563

Patented July 29, 1958

1

2,845,563

BEAM GENERATING SYSTEM

Wolfgang Berthold, Stuttgart-Weil im Dorf, Germany, assignor to International Standard Electric Corporation, New York, N. Y., a corporation of Delaware

Application November 5, 1953, Serial No. 390,328

Claims priority, application Germany November 7, 1952

3 Claims. (Cl. 313—80)

This invention relates to systems for generating electron beams for cathode ray tubes and particularly those tubes using magnetic deflection. It is a well-known fact that when scanning the picture screen of cathode-ray tubes, only the electrons are deflected by means of variable magnetic fields, while the negative ions, on account of their greater mass, meet on the center of the fluorescent screen. This, consequently, results in a different wear of the fluorescent screen (ion spot) which will be noticed during the lifetime of the cathode-ray tube, whereas in the case of tubes employing an electrostatic deflection, the ions are directed over the whole surface of the screen, thus enabling a uniform diminution of the light intensity which is hardly noticeable.

In order to eliminate the ion spot on the fluorescent screen, caused by negative ions emitted from or produced near the cathode, various arrangements have been suggested. In all these arrangements, the electrons and negative ions are first bent away from the axis of the system by a transverse electric field. An adjustable magnet external of the tube directs the electrons back to the axis so that they can reach the oscilloscope screen through the lens apertures of the system, whereas the ions owing to their greater mass are not bent back by the magnet and are collected outside the axis. In these known arrangements the transverse electric field was generated in various ways. For example, it can be produced by a condenser field. In other arrangements the electric field is generated through a slanting lens between two electrodes of the beam generating system. There are arrangements in which the entire electron gun is slanted away from the desired direction and the electrons of the resultant beam are then returned in the desired direction by the use of a magnet. Finally there is an arrangement whereby the anode cylinder with its central aperture is so displaced with respect to the rest of the system that the ions will impinge upon the walls of the anode cylinder whereas the electrons are deflected back magnetically in the desired direction.

All the foregoing arrangements, however, have certain drawbacks. The condenser arrangement requires additional electrodes; the slanted lens systems result in an elliptical cross section of the beam and the slanted system arrangement or displaced anode cylinder are difficult to manufacture and entail additional expense for the adjustment thereof.

In accordance with a feature of the present invention the foregoing drawbacks are avoided by supplying one electrode of the beam generating system with an asymmetrical aperture. By this means the entire system is conventional except for the fact that one aperture is off center and does not coincide with the axis of the cylinder. Since the aperture is in the acceleration path of the electrons, it will so remodulate the field lines that the beam of electrons and ions is deflected away from the cylinder axis. The electrons are then directed back magnetically in known manner whereas ions are captured by a suitable collector. In order to keep the image distortion low, it is desirable to make the opening of this aperture as large as possible so that one part of the perimeter of the aperture contacts the electrode cylinder, into which the aperture is inserted. (For example, the anode cylinder shown in Fig. 1.)

2

The above-mentioned and other features and objects of this invention and the manner of attaining them will become more apparent and the invention itself will be best understood, by reference to the following description of an embodiment of the invention taken in conjunction with the accompanying drawings, wherein:

Fig. 1 is a schematic diagram of a tetrode electron gun system and Fig. 2 is a view of the apertures taking the line A—A of Fig. 1.

Fig. 3 is a diagram showing the lens of Fig. 1 arranged in a cathode ray tube envelope, and Fig. 4 is a diagrammatic illustration of a suitable ion trap magnet.

Referring now to Fig. 1, the electron gun has a cathode **1** within a control electrode cylinder **2** having an aperture through which the beam passes into an accelerating electrode **3**, the open end of which leads into an anode cylinder **4**. The electron and ion beam indicated by the numeral **5** is bent due to the asymmetric anode aperture **6**. The asymmetry of the arrangement of the aperture is shown more clearly in Fig. 2 where **7** designates the axis of the anode cylinder **4**, and **8** designates the center of the aperture opening **6**. If the distance between the axis of the cylinder and the center of the aperture opening is termed "a" and the diameter of the aperture is named "d," then it is desirable—in order to obtain satisfactory deflection away from the axis—to so shape the arrangement that $\frac{1}{2}d>a>\frac{1}{6}d$. This means that the distance of the center of the cylinder axis from the center of the aperture opening lies between ½ and ⅙ of the diameter of the aperture.

Turning to Fig. 3, the electron gun is shown diagrammatically in a single line drawing of a cathode ray tube. In this figure the electron beam **5e** is shown in its corrected position after being redirected by means of the magnetic field G shown diagrammatically by the shading in this figure. The ions from the beam however follow the curve **5i** and are intercepted by aperture plate **11** so that they will not impinge on the cathode ray screen. A suitable form of ion trap magnet for producing field G is shown in Fig. 4. This may be of the present commercial type consisting of a permanent magnet **12** and two pole shoes **10** suitably shaped to fit around the neck of the cathode ray tube.

While I have described above the principles of my invention in connection with specific apparatus, it is to be clearly understood that this description is made only by way of example and not as a limitation to the scope of my invention as set forth in the objects thereof and in the accompanying claims.

I claim:

1. A beam generating system for a cathode ray tube consisting essentially of a cathode electrode, a control electrode adjacent said cathode electrode, a first accelerating electrode adjacent said control electrode and an anode electrode, said control, accelerating and anode electrodes being mounted serially along a given longitudinal axis and symmetrically disposed thereabout and with respect thereto, said control electrode and accelerating electrode each having an aperture concentric with said longitudinal axis, through which the beam passes, said anode electrode having an aperture eccentric with respect to said axis positioned at the end of said anode electrode facing said cathode to produce with the accelerating electrode an electrostatic field deflecting the beam transversely.

2. A beam generating system according to claim 1, wherein said accelerating and anode electrode have the same diameter and wherein one portion of the circumference of the anode aperture is aligned with one portion of the accelerating electrode periphery while the rest of the anode aperture falls within and is spaced from the perimeter of the circle formed by the projection of the accelerating electrode.

3. A beam generating system according to claim 2 wherein the distance between the centers of the two apertures lies between ½ and ⅙ of the diameter of the anode aperture.

References Cited in the file of this patent

UNITED STATES PATENTS

2,146,366	Batchelor	Feb. 7, 1939
2,472,766	Woodbridge	June 7, 1949
2,515,305	Kelar	July 18, 1950
2,579,351	Weimer	Dec. 18, 1951
2,604,599	Breeden	July 22, 1952
2,617,060	De Gier	Nov. 4, 1952

FOREIGN PATENTS

1,043,675	France	June 17, 1953