June 18, 1968 W. F. ARCHINAL ETAL 3,388,514

FLOOR, WALL AND BASE PLATE CONNECTOR

Filed Oct. 18, 1966

Fig. 1

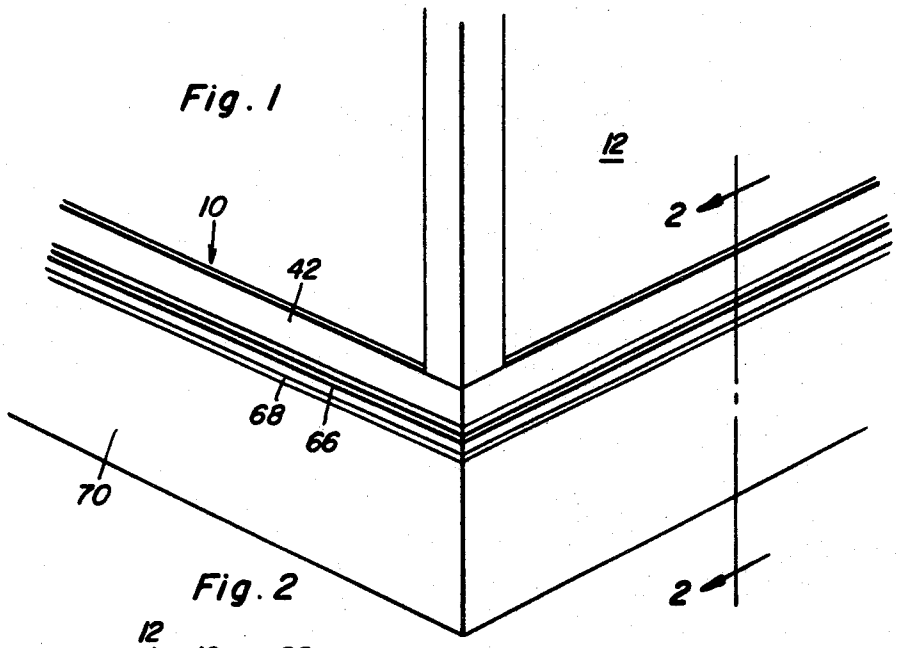

Fig. 2

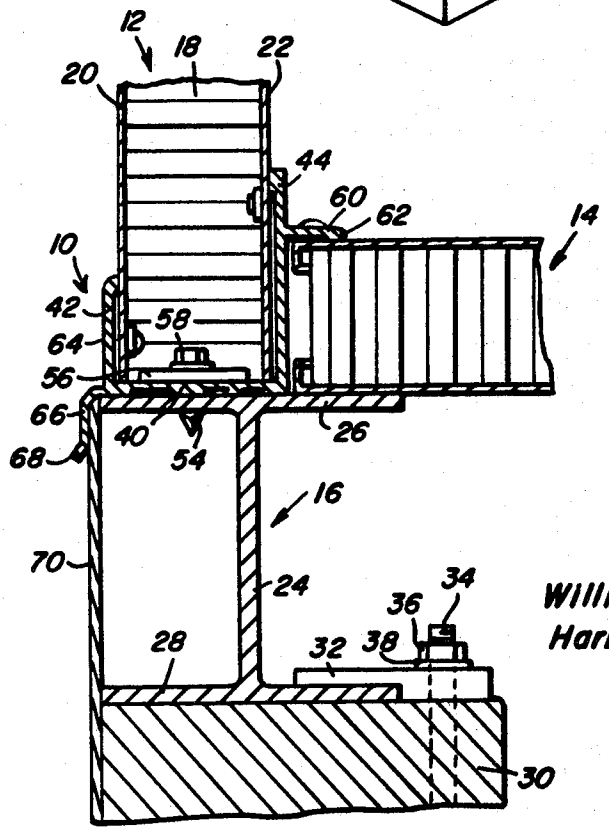

Fig. 3

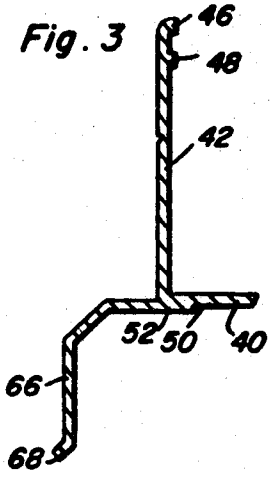

William F. Archinal
Harry M. Brazener
INVENTORS

BY Thomas A. O'Brien and Harvey B. Jacobson
Attorneys

United States Patent Office 3,388,514 Patented June 18, 1968

3,388,514

FLOOR, WALL AND BASE PLATE CONNECTOR

William F. Archinal, Miami, and Harry M. Brazener, Miami Beach, Fla., assignors to Panelfab Products, Inc., a corporation of Florida

Filed Oct. 18, 1966, Ser. No. 587,562
2 Claims. (Cl. 52—97)

ABSTRACT OF THE DISCLOSURE

A channel-shaped connector for assembling a honeycomb wall panel and a honeycomb floor panel to a supporting sill beam mounted on a supporting wall such as a footing or the like. The connector has a relatively long inner flange with a laterally projecting flange extending into overlying relation to the floor panel for securing the floor panel, supporting beam and wall panel together. A drip flange is provided on the connector for extending downwardly into overlapping relation to the edge of the sill beam and to engage the top edge of a skirt panel which extends alongside of the sill beam and the supporting wall.

The present invention generally relates to prefabricated building construction and more specifically to an extruded base channel for use in connecting the floor and wall of such a building to a base plate for securely connecting the three components and at the same time providing an anchorage or holddown therefor and also provide a neat and attractive as well as functional connector extending around the base of the wall of a prefabricated building.

In the construction of prefabricated buildings, honeycomb panels have been widely accepted. These panels basically include a heavy paper honeycomb core which is expanded and resin impregnated with metallic faces or skins bonded thereto. Such panels are actually structural elements and are effectively employed as load bearing elements thereby eliminating the necessity of beams or other supports in the construction of prefabricated buildings. In the construction of prefabricated buildings such as classrooms or the like, it is desirable to have a secure connector and anchorage for the wall panel which is a honeycomb panel and the floor panel which is also a honeycomb panel and while connecting the lower edge of the wall panels to the peripheral edge of the floor panel, it is also desirable to anchor both of these panels to an underlying supporting structure such as a support plate, beam or the like.

Accordingly, it is an object of the present invention to provide a connector for securely anchoring the lower edge of a wall panel and the peripheral edge of a floor panel to an underlying supporting plate or beam with the connector being generally channel-shaped in configuration and provided with structural features which enable the connector to completely encompass the edges of the wall panel and floor panel at the same time securely connect these two panels in a manner to enable removal thereof and to enable some degree of relative movement between the floor panel and the connector.

A further object of the present invention is to provide an extruded base channel connector constructed of material such as an aluminum material or the like which includes an integral drip sill which facilitates the installation of a skirting which may extend to a grade level for providing a neat finished exterior appearance at the base of the building.

Still another object of the present invention is to provide a connector for the floor panel, wall panel and a supporting beam which is simple in construction, easy to install, structurally sound and provides a relocatable structure which is neat, safe and efficient both exteriorly and interiorly of the building.

These together with other objects and advantages which will become subsequently apparent reside in the details of construction and operation as more fully hereinafter described and claimed, reference being had to the accompanying drawings forming a part hereto, wherein like numerals refer to like parts throughout, and in which:

FIGURE 1 is a perspective view of a corner of a building with the base channel connector of the present invention incorporated therein;

FIGURE 2 is a sectional view taken generally upon a plane passing along section line 2—2 illustrating the construction of the building with the connector of the present invention incorporated therein; and

FIGURE 3 is a fragmental sectional view of a portion of the connector itself.

Referring now specifically to the drawings, the numeral 10 generally designates the base channel connector of the present invention for connecting a wall panel generally designated by the numeral 12 and a floor panel generally designated by the numeral 14 to a supporting beam generally designated by the numeral 16. Both the wall panel 12 and floor panel 14 are honeycomb panels and have a cellular honeycomb core 18 constructed of Kraft paper or the like and which is of well-known construction and is an expanded structure with the cells running between metallic skins or faces 20 and 22. The honeycomb core 18 is resin impregnated and the faces 20 and 22 are bonded thereto in a known manner. The panels form no part of the present invention except in their association with the beam and connector 10.

Also, the beam 16 is of conventional construction and is preferably an I-beam having a vertical web 24 and a horizontal upper flange 26 and a horizontal lower flange 28 which rests on a concrete pier or footing 30 and is secured thereto by a plurality of suitable holddown dogs 32 each of which receives a holddown J-bolt 34 or the like having a suitable nut 36 and washer 38 thereon all of which represent conventional structural features.

As illustrated in FIGURE 2, the peripheral edge of the floor panel 14 rests on the top surface of the upper horizontal flange 26 and the lower edge of the wall panel 12 is also disposed adjacent the top flange 26 and in perpendicular overlapping relation to the peripheral edge of the floor panel 14.

The base channel connector 10 includes a bottom web or bight portion 40 having an integral upstanding outer flange 42 at one edge thereof and an integral upstanding inner flange 44 at the inner edge thereof. The flanges 42 and 44 are substantially parallel to each other with the flange 44 being longer than the flange 42 and approximately double the height of the flange 42.

The upper edge of each of the flanges 42 and 44 is inturned slightly at 46 to engage the outer surface of the faces 20 and 22 respectively. Also, each flange 40 and 42 is also provided with an inwardly projecting rib 48 spaced slightly below the inturned upper edge 46 for engagement

with the outer surfaces of the faces 20 and 22 respectively for providing a firm and solid engagement with the wall panel and also accommodate any possible irregularities in the lower edge of the wall panel. This also provides for a better sealing engagement between the flanges and the wall panels.

The lower surface of the web 40 of the base channel connector 10 includes spaced recesses 50 which define spaced flat surfaces 52 for engaging the surface of the flange or plate 26 in a positive and flat manner thereby providing a positive engagement therebetween.

The base channel connector 10 is anchored to the flange or plate 26 of the beam 16 by a fastener member 54 which extends down through a retainer plate or washer 56 and is provided with a polygonal head 58 for receiving a suitable wrench or tool. The fastener 54 may be a self-threading bolt or it may be a threaded bolt received in a threaded opening in the flange 26 of the I-beam. Various types of fasteners may be employed with such a fastener being releasable to enable removal thereof if it is desired to relocate the building. The fastener or holddown member 54 fixedly secures the base channel connector 10 to the flange 26 of the I-beam 16 with the outer flange 42 substantially in alignment with the outer edge of the flange 26 and with the flange 14 generally disposed inwardly of the vertical plane of the web 24 of the I-beam 16 although the dimensional characteristics and relationships of the base channel to the I-beam may vary with it being necessary that the flange 26 extend inwardly beyond the inner vertical flange 44 a substantial distance for extending under and supportingly engaging the lower face of the floor panel 14.

For engaging the upper face of the floor panel 14 and securing the peripheral edge of the floor panel 14 against the beam 26, the inner vertical flange 44 is provided with a laterally extending substantially horizontal flange 60 which is disposed below the upper edge of the flange 44 and has a downwardly extending lip or short flange 62 at the inner edge thereof for sealingly and firmly engaging the outer surface of the upper face of the floor panel 14 as illustrated in FIGURE 2.

Fasteners 64 may extend through the flange 42 and the face 20 of the wall panel 12, through the upper end portion of the flange 44 and the face 22 of the wall panel 12 and through the flange 60 and the upper face of the floor panel 14 to securely retain the wall panel and floor panel in assembled relation to the base channel connector. These fasteners may be of any suitable type and preferably removable for use of relocation of the building and the spacing of the fasteners may be varied depending upon the individual requirements of the building being constructed.

The outer edge of the bight portion 40 of the connector 10 and the lower end of the flange 42 is provided with an integral outwardly and downwardly extending drip lip or sill 66 which flares outwardly slightly at its bottom edge at 68 for receiving a skirting panel 70 which may extend to grade level as illustrated in FIGURE 1 to provide a closure for the under portion of the building. If ventilation of this area is required, the skirting 70 may have ventilating openings therein and this is also true of the web 24 or the concrete footing or piers 30 in the event a continuous footing is used to provide for circulation of air under the floor panel 14 in a known manner.

The base channel connector combined with the concrete pier and steel I-beam form the floor frame of the classroom. This floor frame imparts great structural strength and rigidity to the floor area and makes relocation a relatively simple task. The base channel connector is mounted on the top flange of the I-beam and is bolted to the flange in any suitable manner and the base panel connector serves as the connecting link between the walls which are self load bearing and the floor frame. The flange 60 on the base channel connector is a holddown flange for the flooring system formed by the panels 14. This flange is secured, by riveting or the like directly to the floor panel and prevents lateral or vertical movement of the floor panels. The outwardly and downwardly extending flange 66 provides an integral drip sill and also provides a structure for overlying the upper edge of a skirting panel, facia panel or the like which may be attached to the flange of the drip sill in any suitable manner and may be extended to grade level thereby provides a neat finished exterior appearance at the base of the classroom and serves in the usual manner of such a skirting.

Thus, the structure is rigid and provides a support unit of extremely high strength and also enables the structure to be easily relocated.

The foregoing is considered as illustrative only of the principles of the invention. Further, since numerous modifications and changes will readily occur to those skilled in the art, it is not desired to limit the invention to the exact construction and operation shown and described, and accordingly all suitable modifications and equivalents may be resorted to, falling within the scope of the invention as claimed.

What is claimed as new is as follows:

1. The combination of a supporting wall, a sill beam on the upper surface of said wall, said beam having a horizontally disposed supporting plate forming the upper portion thereof, a base channel connector overlying the plate, means securing the connector to said plate, a vertically disposed honeycomb core and metal faced wall panel having the lower edge received in the base channel connector, a horizontally disposed honeycomb core, metal faced floor panel resting against the upper surface of the inner portion of the support plate, and a flange projecting inwardly from the base channel member into overlying holddown engagement with the floor panel, said base channel connector including a web portion, said means securing the connector to said support plate including fastening means extending through the web portion and the support plate for securing the base channel thereto, said base channel including a pair of flanges extending substantially parallel and vertical from the edges of the web portion with the innermost flange being higher than the outermost flange and the outermost flange generally aligned with the outer edge of said support plate, and fasteners securing the flanges to the metal faces of the wall panel, the longer innermost flange being provided with said floor holddown flange, and means securing the floor holddown flange to the upper metal face of the floor panel, said base channel having an outwardly and downwardly extending drip flange at the outer lower corner thereof for deflecting water away from the support plate, and a skirt panel disposed between the drip flange and support plate and depending alongside of the supporting wall to conceal the sill beam.

2. The combination of a supporting wall, a sill beam on the upper surface of said wall, said beam having a horizontally disposed supporting plate forming the upper portion thereof, a base channel connector overlying the plate, a vertically disposed wall panel having the lower edge received in the base channel connector, a horizontally disposed floor panel resting against the upper surface of the inner portion of the support plate, a flange projecting inwardly from the base channel member into overlying holddown engagement with the floor panel, said base channel connector including a web portion, a pair of flanges extending substantially parallel and vertical from the edges of the web portion with the innermost flange being higher than the outermost flange and the outermost flange generally aligned with the outer edge of said support plate, fastening means extending through the web portion of the connector and the support plate for securing the base channel connector thereto, fastening means interconnecting each of the vertical flanges with the wall panel, fastening means connecting the holddown flange on the innermost vertical flange to the floor panel, said web portion having an outwardly and downwardly extending drip flange at the outer edge thereof, said drip flange extending downwardly beyond the outer edge of the support plate for deflecting water away from the support plate and sup-

porting wall, and a skirt panel disposed between the drip flange and support plate and depending alongside of the sill beam and supporting wall to conceal the sill beam and supporting wall and form a closure panel for the sill beam and supporting wall.

References Cited

UNITED STATES PATENTS

2,177,699	10/1939	Fisher	52—293
2,352,807	8/1944	Sheldon	52—293
2,600,140	6/1952	Torseth	52—282
2,968,374	1/1961	Bohnsack	52—293
3,061,133	10/1962	Reynolds	52—280
3,206,806	9/1965	Powell	52—280

FOREIGN PATENTS

90,164	8/1957	Norway.

HENRY C. SUTHERLAND, *Primary Examiner.*