United States Patent

[11] 3,620,300

[72] Inventor **Fred L. Crowson**
Portland, Tex.

[21] Appl. No. **29,954**
[22] Filed **Apr. 20, 1970**
[45] Patented **Nov. 16, 1971**

[73] Assignee **The Electrothermic Co.**
Corpus Christi, Tex.

[54] METHOD AND APPARATUS FOR ELECTRICALLY HEATING A SUBSURFACE FORMATION

22 Claims, 3 Drawing Figs.

[52] **U.S. Cl.** **166/248,** 166/60
[51] **Int. Cl.** **E21b 43/24**
[50] **Field of Search** 166/248, 272, 285, 294, 295, 302, 57, 60, 306, 292

[56] **References Cited**

UNITED STATES PATENTS

2,368,424	1/1945	Reistle, Jr.	166/292 X
3,106,244	10/1963	Parker	166/248
3,120,263	2/1964	Hoyt	166/306 X
3,137,347	6/1964	Parker	166/248
3,149,672	9/1964	Orkiszewski et al.	166/248
3,189,088	6/1965	Cronberger	166/60 X
3,297,088	1/1967	Huitt et al.	166/295 X
3,417,823	12/1968	Faris	166/248
3,507,330	4/1970	Gill	166/248
3,547,192	12/1970	Claridge	166/248
3,547,193	12/1970	Gill	166/248

Primary Examiner—Stephen J. Novosad
Attorney—Giles C. Clegg, Jr.

ABSTRACT: A method and apparatus include providing one or more vertically spaced electrodes in the borehole in electrical contact with the formation. Two electrodes in a common borehole may be connected to a surface source of alternating current voltage to conductive paths provided respectively by a conductive casing and a conductive tubing suitably insulated from each other; or the two electrodes connected to the voltage source may be placed in separate adjacent boreholes. The flow of current through the formation is guided or directed by means of insulating barriers which extend laterally into the formation from the borehole in vertically spaced relation to the electrode.

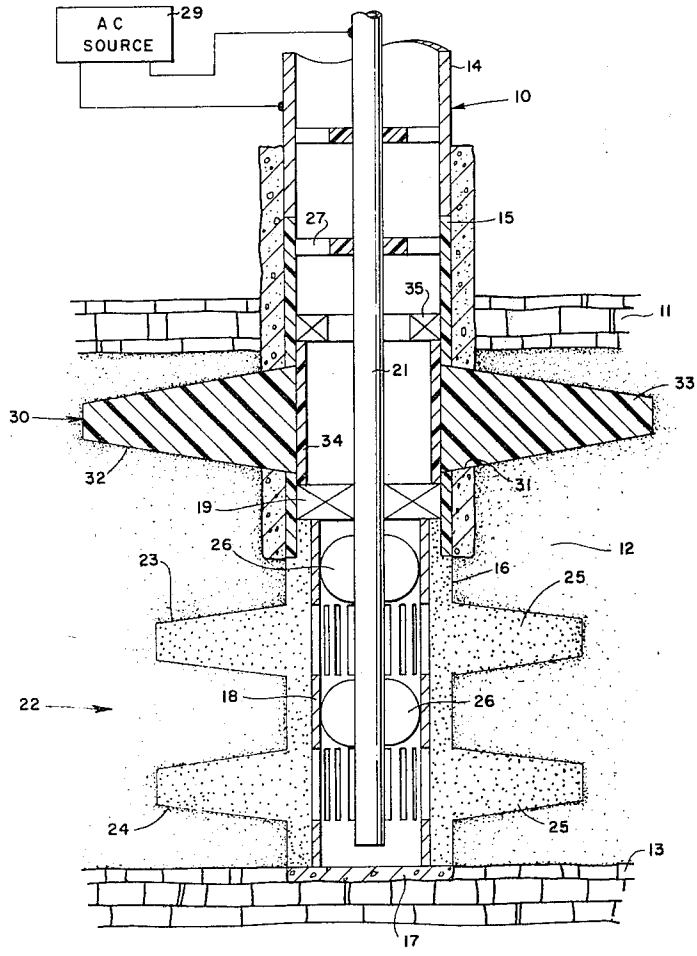

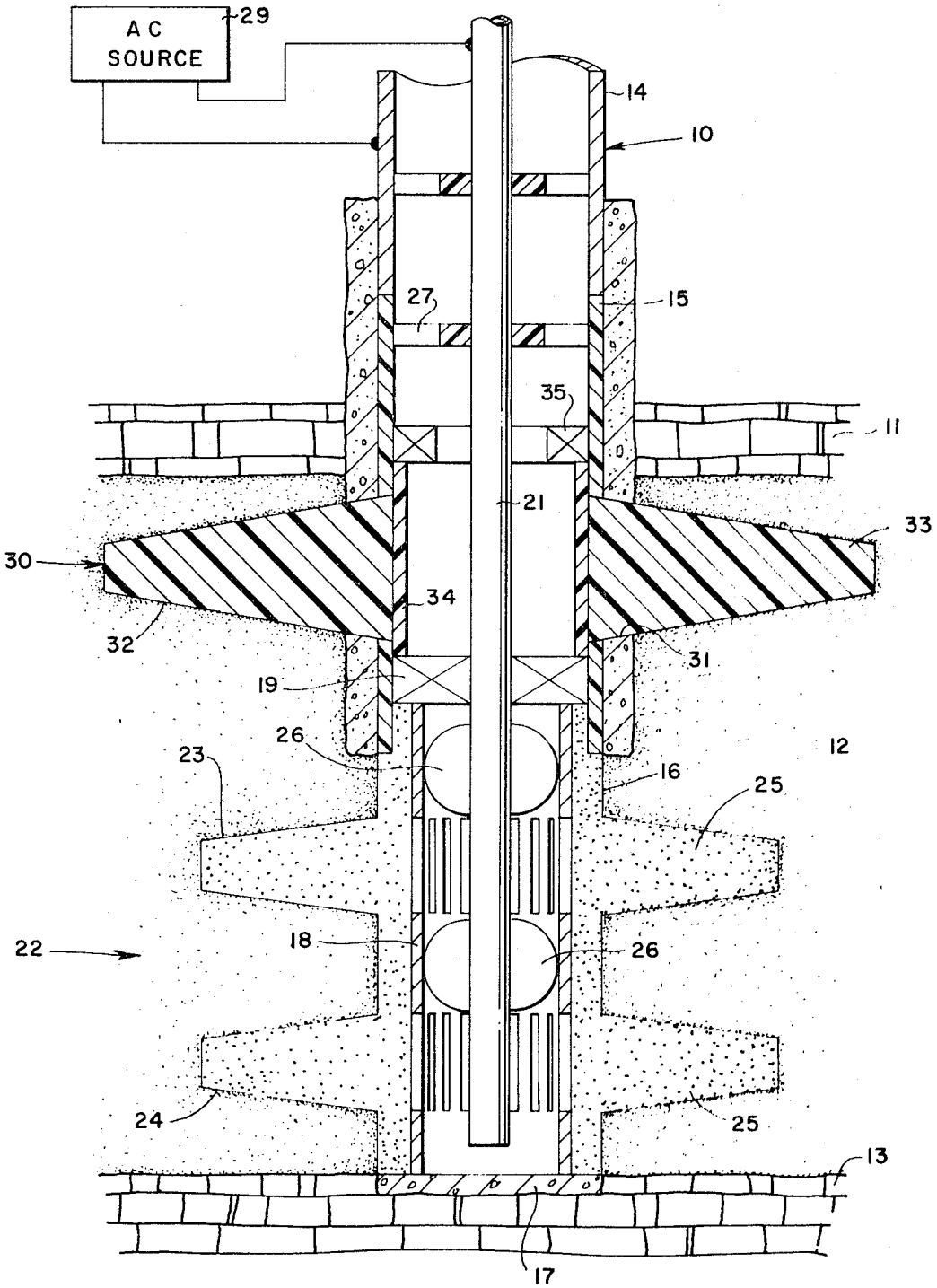

FIG. 1

INVENTOR
FRED L. CROWSON

ATTORNEY

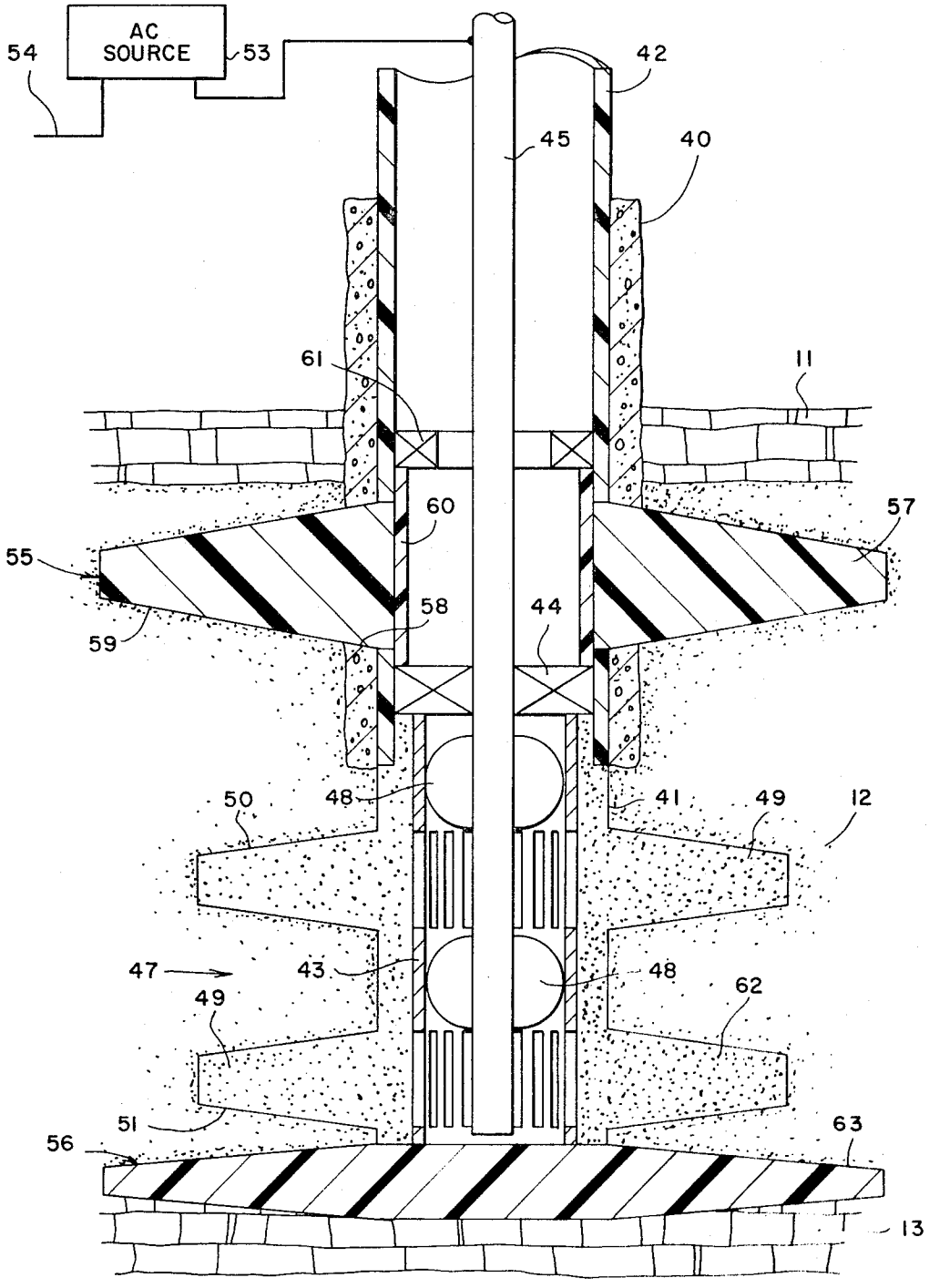

FIG. 2

INVENTOR
FRED L. CROWSON

ATTORNEY

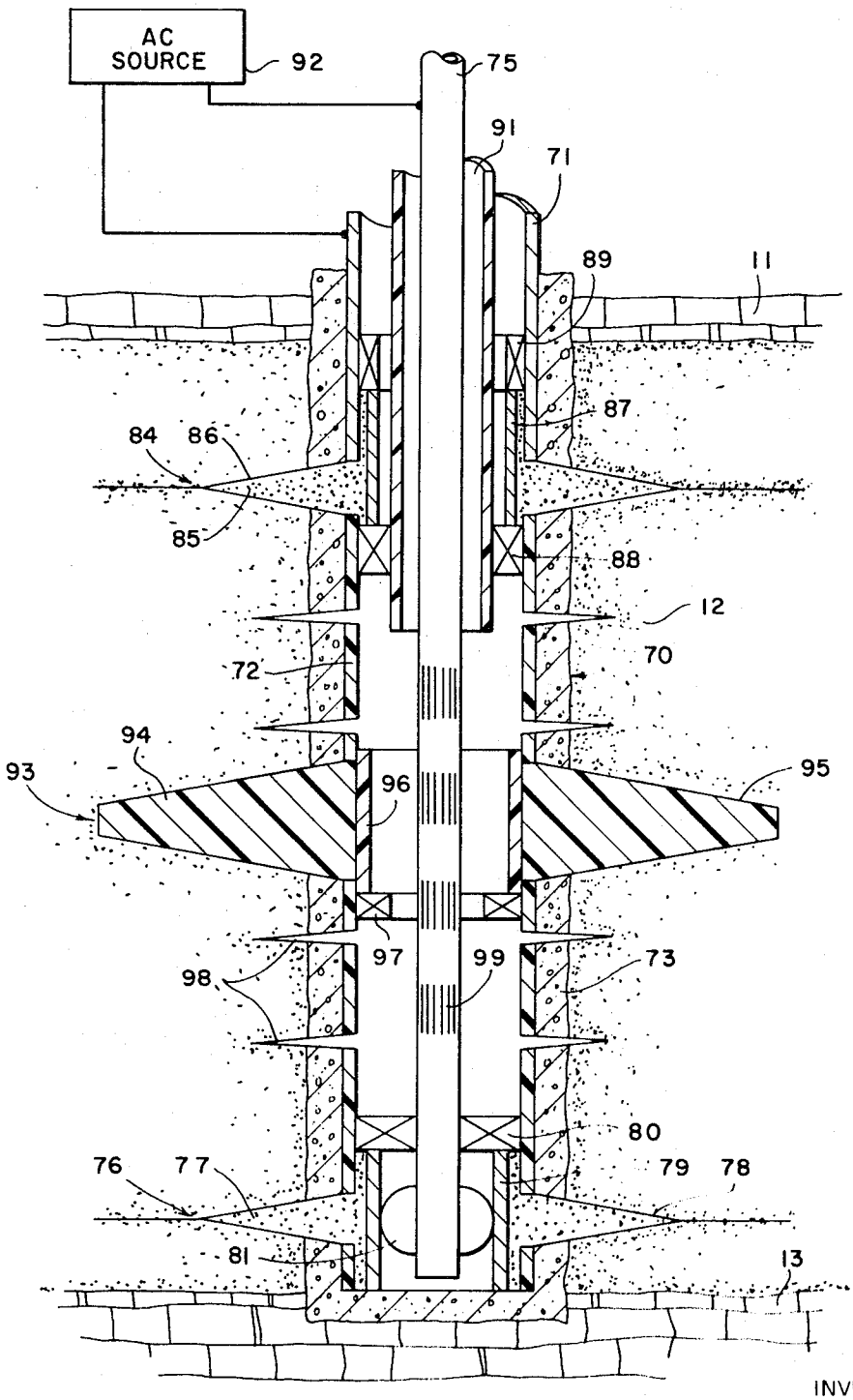

FIG. 3

INVENTOR
FRED L. CROWSON

ATTORNEY

METHOD AND APPARATUS FOR ELECTRICALLY HEATING A SUBSURFACE FORMATION

BACKGROUND OF THE INVENTION

This invention relates to a method and apparatus for heating an oil- or mineral-bearing formation to stimulate the flow of the oil or mineral; and more particularly to a method and apparatus for guiding the flow of electric current in the oil- or mineral-bearing formation.

It is estimated that a large percentage of the known petroleum reserves in the United States cannot be recovered using conventional pumping methods. Known methods for effecting secondary recovery include techniques known as water flood, steam injection and fire flood. All of these techniques require extensive and quite expensive surface installations for their implementation.

An object of this invention is to provide an improved method and apparatus for the recovery of oil or minerals through the use of electric current for heating the formation to encourage the flow of the oil or mineral from the formation.

Another object of this invention is to provide a simple and efficient method and apparatus for electrically heating the formation including means for guiding the path of current flow through the formation.

The method according to the invention includes providing at least one electrode in the bore hole of the producing well in electrical contact with the formation, providing a first conductive path in the bore hole contacting the electrode, providing a second conductive path from the surface to the formation, providing a flow of electrical current through said conductive paths and through said formation to heat the formation, and provide insulating barriers extending into the formation from the producing bore hole positioned relative to the electrode to guide the flow of current through the formation.

The apparatus of the invention includes at least one electrode in the producing bore hole in contact with the formation, means within the bore hole defining a first conductive path from the surface to the electrode, means defining a second conductive path from the surface to the formation, which second conductive path may include a second electrode in the producing bore hole or in another bore hole, a source of alternating current voltage connected to the two conductive paths at the surface to effect the flow of current through said conductive paths and said formation, and means defining one or more insulating barriers extending laterally from the bore hole in spaced relation to the electrodes to guide the flow of current within the formation.

DRAWINGS

The novel features of the invention, as well as additional objects and advantages thereof, will be understood more fully from the following description when read in connection with the accompanying drawings in which:

FIG. 1 is a diagrammatic illustration of one form of the invention including one electrode, one insulating barrier, and two conductive paths in a common bore hole;

FIG. 2 is a diagrammatic illustration of another form of the invention including one electrode, two insulating barriers, and a single conductive path in the common bore hole; and

FIG. 3 is a diagrammatic illustration of still another form of the invention including two electrodes, a single insulating barrier, and two conductive paths in a common bore hole.

DESCRIPTION OF THE PREFERRED EMBODIMENTS

Referring to the drawing, there is illustrated in FIG. 1 the lower portion of a producing well bore hole **10** which extends downwardly through the overburden **11**, through the producing formation **12**, and terminates at the boundary between the producing formation **12** and the underburden **13**. A casing for the bore hole extends from the surface and into the producing formation **12** to a depth somewhat below the upper surface of the formation, the casing including an upper conductive portion **14**, which may be conventional steel casing for example,

and a lower insulating portion **15** which may be fabricated of fiberglass or ceramic for example. The upper conductive portion extends to a depth somewhat above the producing formation **12**.

A lower portion **16** of the bore hole **10** may be of reduced diameter, being produced through coring, for example, to ascertain the nature of the producing formation. The bottom of the bore hole may be provided with a cement plug **17** to support a conventional steel screen **18** provided with slots or other openings to permit the flow of oil into the well. An insulating packer **19** positions the screen relative to the lower end of the insulating casing **15** and physically seals the annular opening between the upper end of the screen and the lower end of the conductive casing.

A string of tubing **21** extends from the surface to the bottom of the bore hole, terminating within the screen **18**, to carry the oil to the surface. This tubing is of conductive material to provide a path for the flow of electric current from the surface to one or more electrodes within the bore hole contacting the producing formation **12**. An electrode **22** is defined within two annular cavities **23** and **24** which are cut into the formation **12**, extending laterally from the lower portion **16** of a bore hole **10**. These cavities, and the annulus between the walls of the bore hole portion **16** and the exterior surface of the screen **18**, are filled with electrically conductive particles **25** which may be metallic pellets of steel or aluminum, carbon pellets, or metallic pellets coated with carbon, for example. These particles are retained in the cavities by the conductive screen **18** and the packer **19**. The conductive tubing **21** is electrically connected to the screen **18** by a pair of conventional centralizers **26** fixed to the tubing and having bands which bow outwardly into engagement with the inner walls of the screen.

As illustrated diagrammatically, a source of alternating current voltage **29** has one terminal connected to the upper end of the conductive tubing **12** and another terminal connected to the upper end of the conductive casing **14**. Current flows then from the voltage source **29** through the tubing **22**, the centralizers **26**, the screen **18** and the conductive particles **25** into the formation **12**, then through the formation **12** and the overburden **11** and returning through the conductive portion **14** of the casing. To prevent any short circuit current paths, the tubing **22** is insulated from the conductive casing **14** by means of vertically spaced insulating spacers **27**; and the screen **18** is insulated from the conductive casing by the intervening nonconductive casing portion **15**.

In order to increase the extent of the formation **12** which may be effectively heated by the above described electrical circuit, the flow path of current through the formation **12** may be guided to extend further in a radial direction from the bore hole **10**. For this purpose, an insulating barrier **30** is provided, consisting of generally disc-shaped shield of insulating material which extends radially from the bore hole and having an effective radius greater than that of the electrode. This barrier is formed by providing a notched interval **31** in the insulating portion **15** of the casing and in the adjacent cement, and forming an adjacent annular cavity **32** in the formation **12** of the desired radial extent. The notched interval and cavity are then filled with an insulating material **33**, such as an insulating cement or an insulating epoxy, with the insulating material being retained by an insulating sleeve **34** confined between the packer **19** and an upper packer **35**.

FIG. 2 is a diagrammatic illustration of another form of producing well bore hole **40** which includes a single electrically conductive path to an electrode within the producing formation which is included in an electric circuit including a second conductive path to the formation and which is spaced laterally from the bore hole **40**, possible in an adjacent well bore hole which may or may not be another producing well. In this arrangement, the well bore hole extends from the surface through the overburden **11** and the producing formation **12** to the lower boundary between the producing formation **12** and the underburden **13**. The bore hole includes a lower cored portion **41**, similar to the bore hole of FIG. **1**. This bore hole is

cased, for example, with an insulating casing 42 which extends from the surface to a point below the upper surface of the producing formation 12; and a screen 43 is positioned in the lower bore hole portion 41 and physically connected to the lower end of the casing 42 by means of a packer 44.

A low resistance electrically conductive path is provided from the surface to the bottom of the bore hole by a string of conductive tubing 45 which is also the production tubing for carrying the production fluid to the surface.

An electrode 47 is identical to that of FIG. 1 including centralizers 48 affixed to the lower end of the tubing and contacting the screen 43; the screen 43 retaining conductive particles 49 with upper and lower annular cavities 50 and 51 extending laterally from the bore hole portion 41, with the screen maintaining electrical contact with these particles.

With the arrangement of FIG. 2, an alternating current voltage source 53, at the surface, has one terminal connected to the upper end of the tubing 45, and another terminal connected at the surface through a conductor 54 to the upper end of a conductive path defining tubing or rod extending toward the formation in an adjacent bore hole, for example. The flow of current then is through the tubing 45 centralizer 48 screen 43 particles 49, and through the producing formation 12 to the other conductive path defining means.

The conductive tubing 45 is insulated from the walls of the bore hole, above the formation, by the insulating casing 42. Since the bore hole 40 contains only a single conductive path, and since the conductive tubing is a much lower resistance path than would be the walls of the formation, it may not be necessary to provide particular means to insulate the tubing from the bore hole walls of the formation 12 in this configuration. Accordingly, the casing may, in the alternative, consist of an upper conductive portion and a lower insulating portion as in the arrangement of FIG. 1.

It may be desirable, in this situation, to prevent too rapid a vertical diffusion of the current flow path as it moves away from the electrode 47, in order to concentrate the power absorption of the electrical current and therefore the heating effect within an effective area adjacent to the producing well bore.

To prevent the too rapid diffusion of the current flow path through the formation 12 adjacent to the electrode 47, there are provided two insulating barriers or shields 55 and 56 disposed respectively above and below the electrode 47. The upper barrier 55 is similar to that illustrated in FIG. 1 consisting of a disclike mass 57 of insulating material disposed in a notched interval 58 in the lower end of the insulating casing 42 and an adjacent cavity 49. The insulating cement or epoxy 57 is again retained by an insulating sleeve 60 confined between a lower packer 44 and an upper packer 51. The lower insulating barrier 56 is defined by a disclike mass 62 of insulating cement or epoxy, for example, which defines the bottom of the bore hole portion 41 and which extends laterally from the bore hole in an annular cavity 63.

The radial extent of the insulating barriers 55 and 56 is preferably greater than that of the electrode 47.

FIG. 3 is a diagrammatic illustration of still another producing well arrangement wherein electric current flows between electrodes vertically spaced in a common bore hole, and a bore hole containing means defining separate conductive paths for the respective electrodes. Referring to FIG. 3, there is shown a production bore hole 70 extending from the surface through the overburden 11 and the producing formation 12 to the boundary between the producing formation and the underburden 13. In this configuration, the bore hole is cased from the surface to the bottom thereof, with an upper insulating portion 71 extending from the surface to a point below the upper surface of the producing formation 12, and with an insulating portion 72 extending from the conductive portion to the bottom of the bore hole. Preferably, the casing is cemented in the bore hole with an insulating cement, at least in the portion of the bore hole which extends through the producing formation 12. The insulating cement may also define a base or bottom plug for the bore hole 70.

A conductive tubing 75 for carrying the produced fluid to the surface also defines a low-resistance conductive path for a lower electrode 76 disposed adjacent to the bottom of the bore hole. This lower electrode consists of a mass of conductive particles 77, such as metallic carbon-coated pellets, disposed in a notched interval in the lower end of the insulating casing 72 and adjacent cement 73, and an adjacent cavity 78 in the producing formation 12. The particles are retained in the cavity by a conductive sleeve or screen 79, positioned in the bottom of the bore hole by a packer 80, the sleeve 79 being electrically engaged by a conductive centralizer 81 fixed to the lower end of the tubing 75.

An upper electrode 84 is positioned adjacent to the upper surface of the producing formation 12 and consists of a mass of conductive particles 85 confined within a notched interval provided in the lower end of the conductive casing 71 and the adjacent cement and in an adjacent annular cavity 86 extending into the formation 12. The particles are retained within a cavity by a conductive sleeve 87, confined between a lower insulating packer 88 and an upper packer 89.

The conductive casing 71 defines a conductive path from the surface to the electrode 84, and must be insulated from the conductive tubing 75. This insulation is provided by a string of insulating tubing 91 which extends from the surface to a depth sufficient to overlap the upper end of the insulating casing 72. The insulating packer 88 mechanically couples these insulating members, and seals the annulus between them to obviate any conductive path between the electrodes 76 and 84 within the casing. Similarly, the insulating casing 72 and the insulating cement 72 obviate any low-resistance conductive path between the electrodes, so that the current flowing between the electrodes necessarily flows through the formation 12. The terminals of the alternating current source 92 are connected at the surface to the conductive tubing and the conductive casing so that the current flows through the tubing and associated electrode 76, through the formation 12, then through the electrode 84 and associated conductive casing 71.

In order to expand the area of the formation which is effectively heated by the current flowing therethrough, an insulating barrier 93 is formed within the formation between the electrodes. This barrier takes the form of a disc-shaped mass of insulating material 94, such as insulating cement or epoxy, confined in an annular cavity 95 formed in a formation 12 through a notched interval 96 provided in the insulating casing 72 and the adjacent cement 73. The insulating material is retained in a cavity by means of an insulating sleeve 96 supported on a packer 97.

The insulating barrier 93 preferably has a radial extent greater than that of the electrodes 76 and 84, and serves to deflect the current flow path through the formation outward relative to the bore hole to effect heating of the formation at radial distance greater from the bore hole than would otherwise be effected, and thereby increase the amount of formation which may be produced. The produced fluid flows from the formation into the well through perforations 98, formed in the insulating casing and the adjacent cement by conventional techniques; and the production tubing 75 may include slots or other openings 99 to effect the flow of fluid into the tubing to be transported to the surface.

A method of the invention which may be practiced by the above described producing well configurations, or by other configurations, includes the steps: establishing an electrode in the producing well bore hole in electrical contact with the formation to be produced; providing a first low-resistance conductive path contacting the electrode, which is preferably provided by a conductive tubing which is also the tubing for transporting the produced fluid to the surface; providing a second low-resistance conductive path from the surface to the formation, which may be provided by a conductive path from the surface to the formation, which may be provided by a conductive casing either alone or in conjunction with a second electrode, or a conductive pipe or rod in an adjacent bore hole; producing a flow of electric current through the two conductive paths and the formation. The current being carried in the

connate water in the formation to heat the formation and providing one or more insulating barriers extending radially from the producing bore hole into the formation to guide, direct or concentrate the flow path of current through the formation to provide more efficient or more extensive heating of the formation.

What is claimed is:

1. A method for electrically heating a subsurface formation through at least one bore hole extending from the surface into said formation including the steps:

establishing an electrode in said bore hole in electrical communication with said formation;

providing a first relatively low-resistance conductive path in said bore hole extending from the surface to contact said electrode;

providing a second relatively low-resistance conductive path extending from the surface to said formation;

producing a flow of electric current from a voltage source through said first and second conductive paths, said electrode, and said formation to heat said formation;

providing at least one insulating barrier extending laterally from said bore hole in vertically spaced relation to said electrode to guide the flow path of electric current through said formation.

2. A method as set forth in claim 1

including providing said insulating barrier by producing an annular cavity extending laterally into said formation from said bore hole;

and filling said cavity with an insulating material

3. A method as set forth in claim 2

wherein said cavity is filled with an insulating cement.

4. A method as set forth in claim

wherein said cavity is filled with an insulating epoxy.

5. A method as set forth in claim 1

including providing an insulating liner for said bore hole extending between said electrode and said barrier.

6. A method as set forth in claim 1

including providing two insulating barriers extending laterally into said formation from said bore hole and positioned respectively above and below said electrode.

7. A method as set forth in claim 6

including providing said second conductive path within a bore hole spaced laterally from said first named bore hole.

8. A method as set forth in claim 1

including establishing a second electrode in said bore hole in electrical communication with said formation and in vertically spaced relation to said first named electrode;

connecting said second electrode to said second conductive path;

insulating said first and second electrodes from each other within said bore hole;

and providing said insulating barrier between said vertically spaced electrodes.

9. A method as set forth in claim 8

including providing an insulating liner in said bore hole between said electrode;

and joining said insulating barrier to said insulating liner.

10. A method as set forth in claim 9

and providing said insulating barrier by forming a notched interval in said insulating liner, providing an adjacent annular cavity in said formation, and filling said notched interval and said cavity with an insulating material.

11. A method as set forth in claim 1

including providing a conductive tubing in said bore hole defining said first conductive path;

and providing a conductive casing in said bore hole defining said second conductive path.

12. A method as set forth in claim 1

including providing an insulating barrier above said electrode;

and providing said second conductive path within said bore hole terminating at point above said insulating barrier.

13. A method as set forth in claim 12

including providing a conductive tubing defining said first conductive path;

providing a conductive casing defining said second conductive path;

and insulating said conductive tubing from said conductive casing.

14. Apparatus for electrically heating a subsurface formation through at least one bore hole extending from the surface into said formation comprising:

means defining an electrode in said bore hole communicating with said formation;

means in said bore hole defining a first relatively low-resistance conductive path extending from the surface to said formation and connected to said electrode;

means defining a second relatively low-resistance conductive path extending from the surface to said formation;

a source of alternating current supply voltage;

means at the surface connecting one terminal of said voltage source to said first conductive path, and means connecting another terminal of said voltage source to a second conductive path for completing an electric circuit through said first and second conductive paths and said electrode through said formation;

and means defining at least one insulating barrier extending laterally from said bore hole into said formation; said barrier means being spaced vertically from said electrode to guide the flow of current through said formation.

15. Apparatus as set forth in claim 14

wherein said insulating barrier means is defined by a mass of insulating material urged into an annular cavity extending laterally from said bore hole.

16. Apparatus as set forth in claim 15

wherein said insulating material is an insulating cement.

17. Apparatus as set forth in claim 15

wherein said insulating material is an epoxy material.

18. Apparatus as set forth in claim 14

said first conductive path being defined by a conductive tubing; and said second conductive path being defined by a conductive casing.

19. Apparatus as set forth in claim 14

said insulating barrier being disposed vertically above said electrode; and said second conductive path being disposed within said bore hole, terminating at a point above said insulating barrier.

20. Apparatus as set forth in claim 14

first and second insulating barriers disposed respectively above and below said electrode; said second conductive path being provided in a bore hole spaced laterally from said first named bore hole.

21. Apparatus as set forth in claim 14

means defining first and second vertically spaced electrodes; said first electrode being connected to said first conductive path; said second conductive path being disposed within said bore hole and being connected to said second electrode;

said insulating barrier being disposed vertically between said first and second electrodes.

22. Apparatus as set forth in claim 21

means defining an insulating liner for said bore hole between said first and second electrodes; and said insulating barrier extending laterally from said insulating liner.

* * * * *