May 5, 1953 Z. M. SHAPIRO 2,637,298

APPARATUS FOR ATTACHING FILAMENTS TO ELECTRODES IN MACHINES FOR COATING WITH METAL VAPORS

Filed Nov. 20, 1951 2 SHEETS—SHEET 1

FIG. 1.

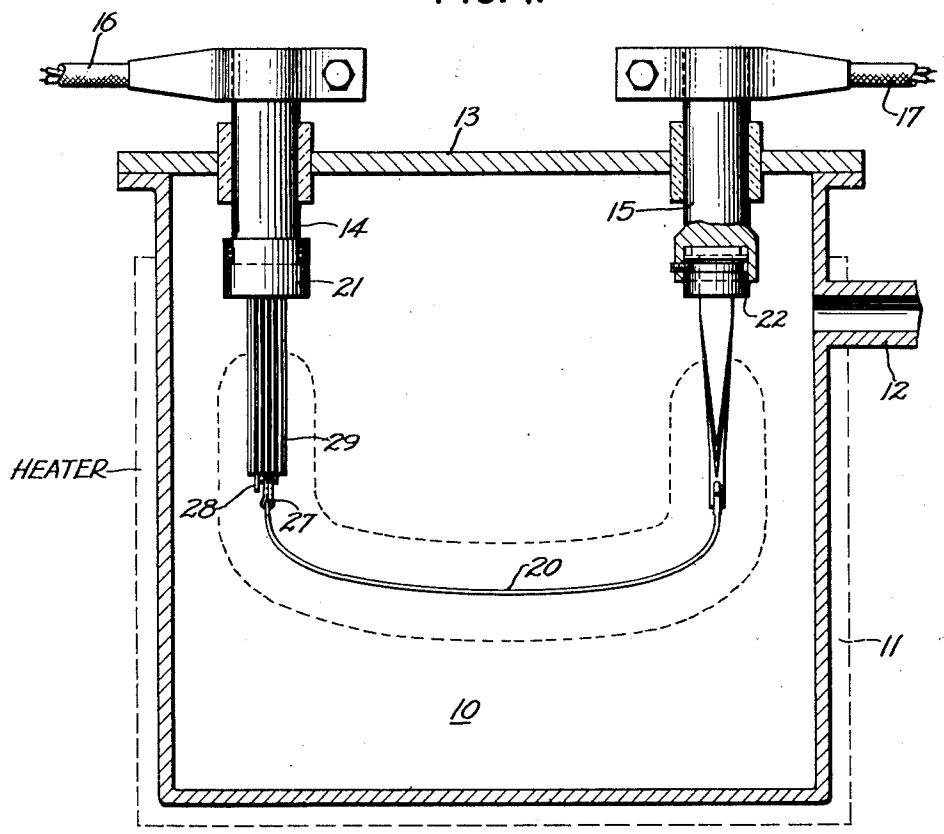

FIG. 2.

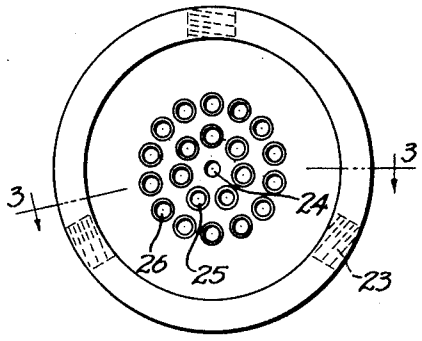

FIG. 3.

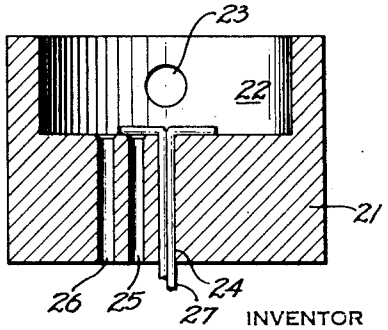

INVENTOR
ZALMAN M. SHAPIRO
BY
Roland A. Anderson
ATTORNEY

May 5, 1953 Z. M. SHAPIRO 2,637,298

APPARATUS FOR ATTACHING FILAMENTS TO ELECTRODES IN MACHINES FOR COATING WITH METAL VAPORS

Filed Nov. 20, 1951 2 SHEETS—SHEET 2

FIG. 7.

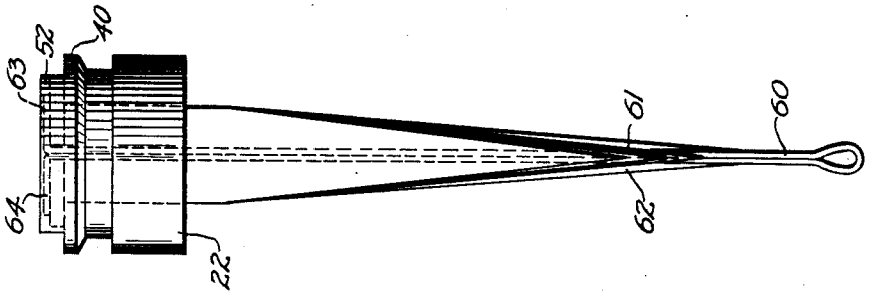

FIG. 6.

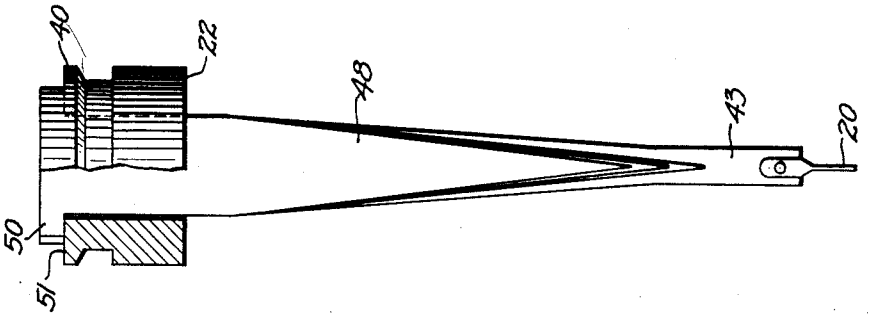

FIG. 5.

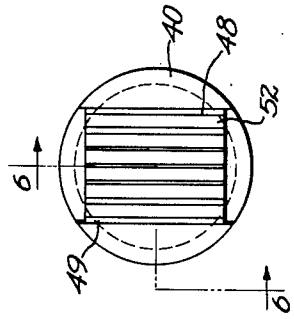

FIG. 8.

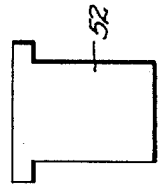

FIG. 4.

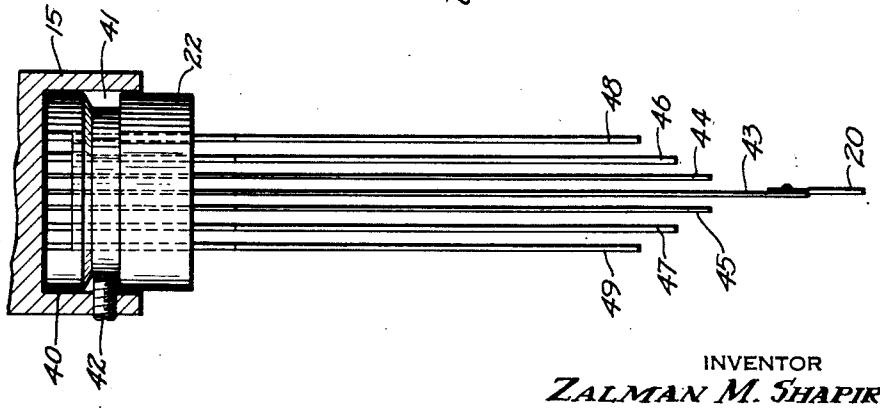

INVENTOR
ZALMAN M. SHAPIRO
BY
Roland A. Anderson
ATTORNEY

Patented May 5, 1953

2,637,298

UNITED STATES PATENT OFFICE

2,637,298

APPARATUS FOR ATTACHING FILAMENTS TO ELECTRODES IN MACHINES FOR COATING WITH METAL VAPORS

Zalman M. Shapiro, Pittsburgh, Pa., assignor, by mesne assignments, to the United States of America as represented by the United States Atomic Energy Commission

Application November 20, 1951, Serial No. 257,309

7 Claims. (Cl. 118—49)

1

This invention relates to the art of precipitating metals by thermal decomposition of a compound thereof and more particularly to a new and improved apparatus for mounting the filament or starting wire employed in the well-known "hot-wire" process. In my copending application for United States Letters Patent, Serial Number 257,308, filed November 20, 1951, the requirements for such an apparatus are set forth and a novel and useful means for meeting such requirements is disclosed. However, despite the fact that the apparatus shown in that application fulfills a long felt need it has been found that the electrode tip therein shown is relatively expensive in that it normally is intended for use only on one occasion, and is made of a relatively expensive material and the cost of machining the same is relatively high.

The present invention has as an object the provision of a new and improved means for attaching a hot-wire filament to an electrode and comprising a reusable adaptor unit.

A second object is the provision of an electrode tip assembly for attaching a hot-wire filament to an electrode through the intermediary of easily assembled and disassembled current carrying elements which are relatively inexpensive and expendable.

A third object is the provision of a new and improved apparatus for attaching a hot-wire filament to an electrode by means of a separable assembly arranged to limit heat conductivity and to provide current carrying capacity in accordance with the changing needs at various stages of the metal deposition.

Other objects and advantages will become more apparent as the description proceeds and when considered in conjunction with the accompanying drawings in which:

Figure 1 is a view, partly in section, showing a vessel in which thermal decomposition of a metal compound for hot-wire deposition of the metal may be carried out using the improved apparatus for my invention;

Figure 2 is a top plan view of one form of adaptor embodying certain features of the invention;

Figure 3 is a sectional view of the adaptor taken on line 3—3 of Figure 2;

Figure 4 is a front elevation view showing another suitable form of adaptor with attached fin elements;

Figure 5 is a top plan view of the adaptor shown in Figure 4;

Figure 6 is a side elevation of the adaptor and fins shown in Figure 4;

2

Figure 7 is a side elevation of the adaptor and fins of Figure 4, but showing an alternate arrangement for anchoring the hot-wire filament; and

Figure 8 is an elevation view of a spacer element employed with the fins and adaptor.

Referring now to Figure 1, a suitable vessel or reaction chamber 10, having an associated heating means 11, is provided for containing the vapor of the metal compound. A conduit 12 leading to an evacuating means and a lid 13 suitably sealed upon the flanged edge of the vessel are preferably employed to the end that a desired metal compound may be placed in the vessel, and contaminating air may thereafter be drawn out of the vessel prior to the formation of the metal vapor resulting from externally applied heat all in the manner known in the art. As will be apparent to those skilled in this art, certain standard precautions will be observed in carrying out the process, especially in view of the highly corrosive nature of the liberated gas evolved from the metal compound. The material used in construction of vessel 10 and other exposed apparatus will accordingly be selected with this feature in mind. For example, in the cyclic iodide process of preparing ductile zirconium, the zirconium to be deposited together with a small amount of iodine or zirconium iodide, may be loaded into vessel 10 into a cracking bottle which can be broken after being enclosed in the vessel. After suitable evacuation of the vessel the heating means 11 may be operated to cause a zirconium iodide vapor to permeate the vessel. Thereafter the hot-wire filament, later to be described, is raised to a suitable temperature and the volatile zirconium tetraiodide will decompose on that wire leaving a deposit of elemental zirconium and liberating the elemental iodine. This iodine in turn diffuses back to the crude zirconium material and forms more of the metallic iodide vapor which in turn diffuses to the wire and is decomposed. In this way the seed filament or wire has built upon it a heavy deposit of zirconium provided it can be supported upon the electrodes and can constantly receive enough current to remain above the decomposition temperature of the metal compound vapor. As set forth in detail in my copending case, above referred to, if excessive heat flow by conduction from the ends of the hot-wire is permitted, the wire may fall below the decomposition temperature at its ends whereupon the gas liberated from the decomposable vapor, in the illustrative example, iodine, will then attack the deposit at this cooler point.

In a short time the wire at this area will start to fuse since as more current is supplied to maintain the decomposition temperature at the other parts of the wire and its deposit this particular area of the wire will have insufficient current carrying capacity. To avoid this problem the present invention provides a suitable ratio of dimensions of current carrying structure as will become more apparent hereinafter.

There preferably is mounted within the lid of the vessel 10 two massive electrodes 14 and 15 suitably insulated from the vessel and having heavy leads 16 and 17 respectively connected thereto. These leads which may be called upon to carry currents in the order of 2000 amperes, or greater are suitably connected to a regulated source of electrical current permitting an appropriate increase in the flow of current as the size of the deposited metal bar increases, thereby to permit the maintenance of such deposited metal at an appropriate temperature.

A starting wire or filament 20, also known as a "hot-wire," is suspended within the space of the vessel and in accordance with my invention is connected at its ends to the electrodes by means of electrode tip structure comprising reusable adaptors 21 and 22 having attached expendable connector means now to be described. For simplicity of description there is shown in Figure 1 two alternate forms of such adaptors and connector means although, as will be obvious, either of these types may be used in pairs rather than using one of each type as shown.

As shown in Figures 2 and 3 and at the left hand electrode of Figure 1, one form of adaptor may comprise a cup shaped member 21 having a hollow upper portion 22 adapted to slip upon the exposed lower end of the electrode and to be retained thereon by suitable set screws extending through threaded holes such as 23. The adaptor body preferably is formed of a refractory metal such as molybdenum, or of the same material as the wire 20, or other suitable refractory metal, and is provided with a plurality of concentrically spaced apertures surrounding a centrally disposed aperture 24 extending through the adaptor body 21. The spaced apertures preferably may be in two concentric rings as indicated by illustrative apertures 25 and 26. Means for attaching the end of wire 20 to the adaptor will normally be located in the aperture 24 and may take one of various forms. For example, the aperture 24 should be of the approximate outer diameter of wire 20, which usually is about 0.080 to 0.095 inch. One means for attaching this wire may include a looped molybdenum connector wire 27 shown in Figure 3 and having its ends anchored within space 22 of the adaptor, the end of the wire 20 being attached in a suitable manner to the looped end of wire 27 at a point furthermost from adaptor 21 as seen in Figure 1. A further variation may include the use of a small molybdenum tube, not shown, inserted in aperture 24 and through which the wire 20 may be inserted for anchoring within the space 22 of the adaptor.

For the purpose of providing increased current carrying capacity as needed and for supporting the heavy weight of the deposited bar as it grows to a size generally indicated by the dotted line in Figure 1 a series of molybdenum wires 28, preferably of unequal length, and each of which is shorter than the effective length of connector wire 27, are mounted in apertures 25 and anchored at their upper ends in space 22. Similarly in apertures 26 a plurality of such wires 29, which

are shorter than wires 28, are likewise mounted and anchored at their upper ends in space 22. As will thus be seen, when this electrode tip assembly is first installed in vessel 10 electrical current can flow only through the electrode 14, adaptor 21, looped wire 27 and filament 20 to the other assembly on the other electrode 15. The spaced longer wires 28 and the spaced shorter wires 29 do not at this time participate in this current carrying circuit. However, as the deposited metal upon filament 20 increases in volume with the concomitant increase in diameter of that filament, the metal deposit bridges over from looped wire 27 to the adjacent projecting ends of the longer wires 28, and upon continuing the process a similar bridging later takes place between the deposit upon such wires 28 and the ends of the adjacent shorter wires 29. In this way a progressive growth in diameter of the deposited bar, with its need for increased current carrying capacity and proper heat conductance, is accommodated by the progressive bridging afforded by the design of electrode tip. With this arrangement a bar of deposited metal having a diameter as large as 1⅛" may be grown with the assurance that the process will be carried out without interruption and that the heavy weight of the bar will be adequately supported without damage to the electrode.

The spacing of the supporting wires as noted in Figure 2 is such as to insure a progressive bridging of the wires by the deposited metal and thus to build not only the current carrying capacity, but also the mechanical support as needed and yet to limit the heat conducting capacity to a safe value simultaneously with growth of bar diameter. The diameter of the supporting wires is not critical within reasonable limits. It has been found that wires of 0.080 inch diameter are satisfactory but if wires of more than twice this diameter are used their heat conductivity is much higher and zirconium may not grow on them.

Upon completion of the thus described deposition process the heater 11 may be disconnected, the supply of current to the electrodes may be discontinued and the lid 13 of the vessel may be removed. By loosening the set screws in holes 23 the entire adaptor, connector and deposited metal assembly may be removed as a unit. In contrast with the invention in my above-mentioned application, however, it is possible to reuse the adaptor simply by sawing off the deposited bar, as by making a cut through the connector wire 27 and wires 28 and 29 below the adaptor body 21, thus making the relatively expensive adaptor available for repeated usage. Merely by inserting a new set of such wires in the adaptor and by discarding the severed upper ends of the old wires, a new electrode tip assembly can be quickly provided.

Referring now to Figures 4 and 5 and to the right hand portion of Figure 1, there is shown an alternative arrangement comprising an adaptor 22 having a top portion 40 and a circumferential side groove 41 into which suitable fastening means, such as set screws 42, may be inserted in order to mount the structure detachably upon the electrode 15. The adaptor is provided with a plurality of parallel spaced rectangular apertures into which a plurality of thin fin members are adapted to be positioned and to extend therefrom into the interior of vessel 10. As shown in Figure 4, the centrally disposed fin member 43 preferably is longer than the immediately adjacent members 44 and 45 and at its lower end is

provided with a suitable means for anchoring thereto one end of the starting wire **20**. Other pairs of fin members such as **46**, **47** and **48**, **49** may be provided depending upon the mechanical support and the current carrying capacity required for the bar of metal to be deposited. In general, it is preferred to utilize tapered fin members, as best shown in Figure 6, although the taper provided for the fin anchoring the starting filament must permit a sufficient cross section to insure adequate support until the deposited metal begins to bridge the adjacent fins. Each fin is provided with shoulders such as shown at **50** resting upon a ledge **51** adjacent the upper portion **40** of the adaptor for the purpose of spacing the same properly. Intermediate each fin is a separate short spacer **52**, such as shown in Figure 8, for maintaining this desired spacing. As in the earlier described modification of the invention, the fins preferably are made of a refractory metal such as molybdenum or of the same metal as the starting wire **20**. Likewise, for the purpose of limiting the conduction of heat, the fins not only are tapered but also are of comparatively thin sheet metal, for example having a thickness of the order of 0.030 inch when a starting wire of 0.080 inch is employed. Various ways of attaching the starting wire to the central fin may be employed other than the riveted fastening shown in Figure 6. For example, a looped molybdenum wire **60**, as best shown in Figure 7, may be positioned in a central fin having separated parts **61** and **62** and the ends **63** and **64** of such looped wire may be anchored at the top **40** of the adaptor between adjacent spacers. The end of the filament or starting wire in this case may then be secured in any suitable way to the extending loop of the wire **60**. By use of fins thus described, when the deposition of the desired bar of metal has taken place the bar may be severed from the adaptor **22** by cutting through the fins, the severed upper ends may be discarded and both the spacers **52** and the adaptor **22** may be reused.

As will be apparent, various changes in the construction and materials used in the adaptors, the fins and rods and the various spacing and fastening means may be made without departing from the scope of the invention. Moreover, the apparatus is in no way limited to the production of zirconium bars, but on the contrary may be used in the production of any metal using the hot-wire techniques. Accordingly, it is not desired to limit the invention to the exact details as shown except insofar as defined in the following claims.

What is claimed is:

1. In combination, a vessel adapted to contain a decomposable vapor of a metal compound, electrodes mounted within said vessel, a filament adapted to be maintained at a temperature above the decomposing temperature of said vapor by a current supplied to said electrodes, and means for attaching the ends of said filament to said electrodes, said means comprising a detachable adaptor attached to the electrode and a plurality of spaced members fixed at one end to said adaptor, one of said members having an end of said filament attached to the non-fixed end thereof and with the non-fixed ends of the remaining members suspended in space and terminating adjacent the point of attachment of said filament, whereby deposited metal may progressively bridge the spaces between the non-fixed ends of the members.

2. For use in the support of an enlarged deposit of metal by an electrode, an electrode tip assembly having an adaptor portion arranged to contact said electrode, means for releasably mounting said assembly upon said electrode, a plurality of spaced current carrying elements mounted at one end upon said adaptor portion, and means for attaching a hot-wire filament to the projecting end of one of said elements, the other end of the remaining elements being suspended in space and terminating adjacent the point of attachment of said filament, whereby deposited metal may progressively bridge the spaces between the ends of said elements as the size of the deposit is enlarged.

3. Apparatus as described in claim 2, wherein said elements comprise a series of wires.

4. Apparatus as described in claim 3, wherein at least one of said wires is longer than the remaining wires.

5. Apparatus as described in claim 2, wherein said elements comprise a series of comparatively thin tapered fins having the widest portion thereof attached to the adaptor.

6. Apparatus as described in claim 5, wherein at least one of said fins is longer than the remaining fins.

7. An electrode tip assembly comprising an apertured adaptor member arranged for detachable mounting upon an electrode, a plurality of heat and electric current conducting metal elements extending through said apertures and spaced from each other, a centrally disposed element longer than the remaining said elements and adapted to connect with one end of a hot-wire filament, the spacing of said elements permitting the bridging of the same by deposited metal on one side of said adaptor, and means detachably anchoring said elements at the opposite side of said adaptor whereby upon severing the deposited metal and bridged elements the remainder of said elements may be retracted through said adaptor thereby to permit the reuse of said adaptor.

ZALMAN M. SHAPIRO.

References Cited in the file of this patent

UNITED STATES PATENTS

Number	Name	Date
745,122	Tone	Nov. 24, 1903
1,218,042	Baily et al.	Mar. 6, 1917
1,222,593	Barnett et al.	Apr. 17, 1917
1,681,736	Kull	Aug. 21, 1928
1,819,554	Hanson	Aug. 18, 1931
2,551,341	Scheer et al.	May 1, 1951