Sept. 24, 1940. G. W. NEWTON 2,216,088

MIXING METHOD AND APPARATUS

Filed July 29, 1938 2 Sheets-Sheet 1

Fig. 1.

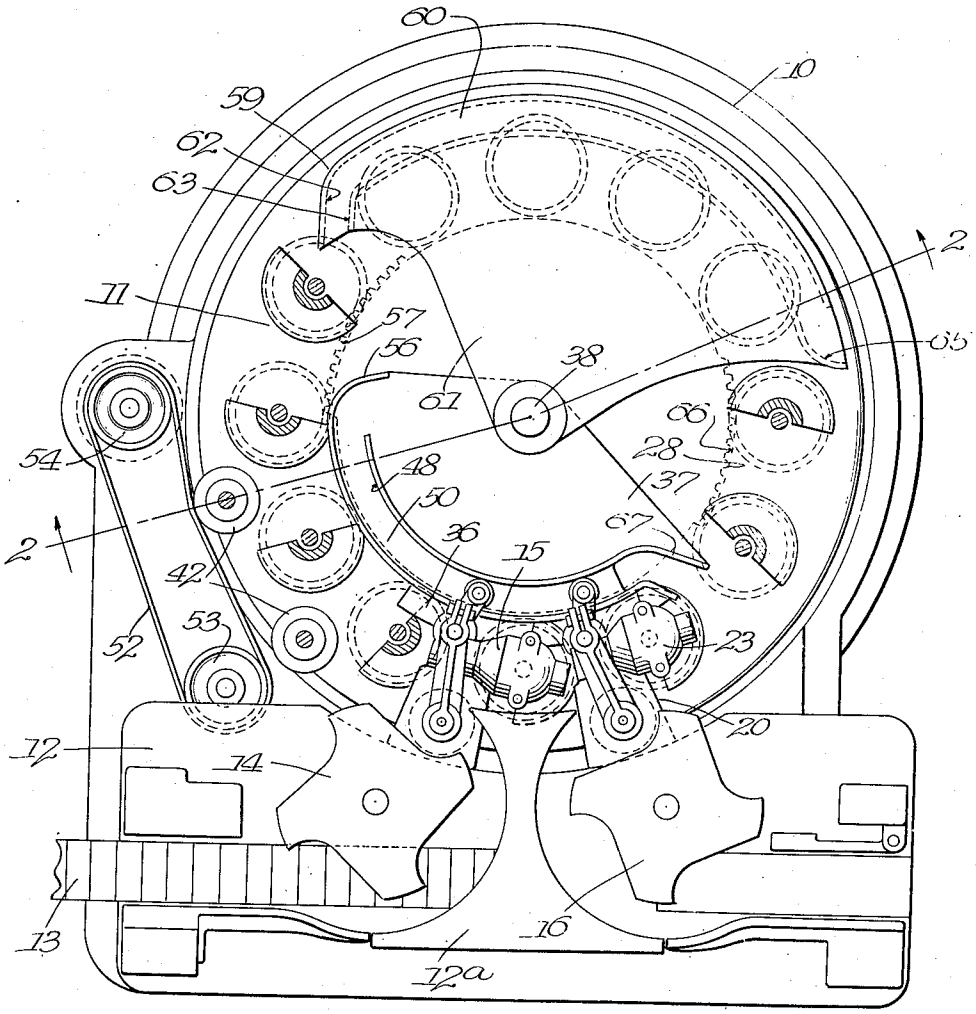

Inventor

George W. Newton

By Cushman, Darby & Cushman

Attorneys

Sept. 24, 1940.

G. W. NEWTON

2,216,088

MIXING METHOD AND APPARATUS

Filed July 29, 1938

2 Sheets-Sheet 2

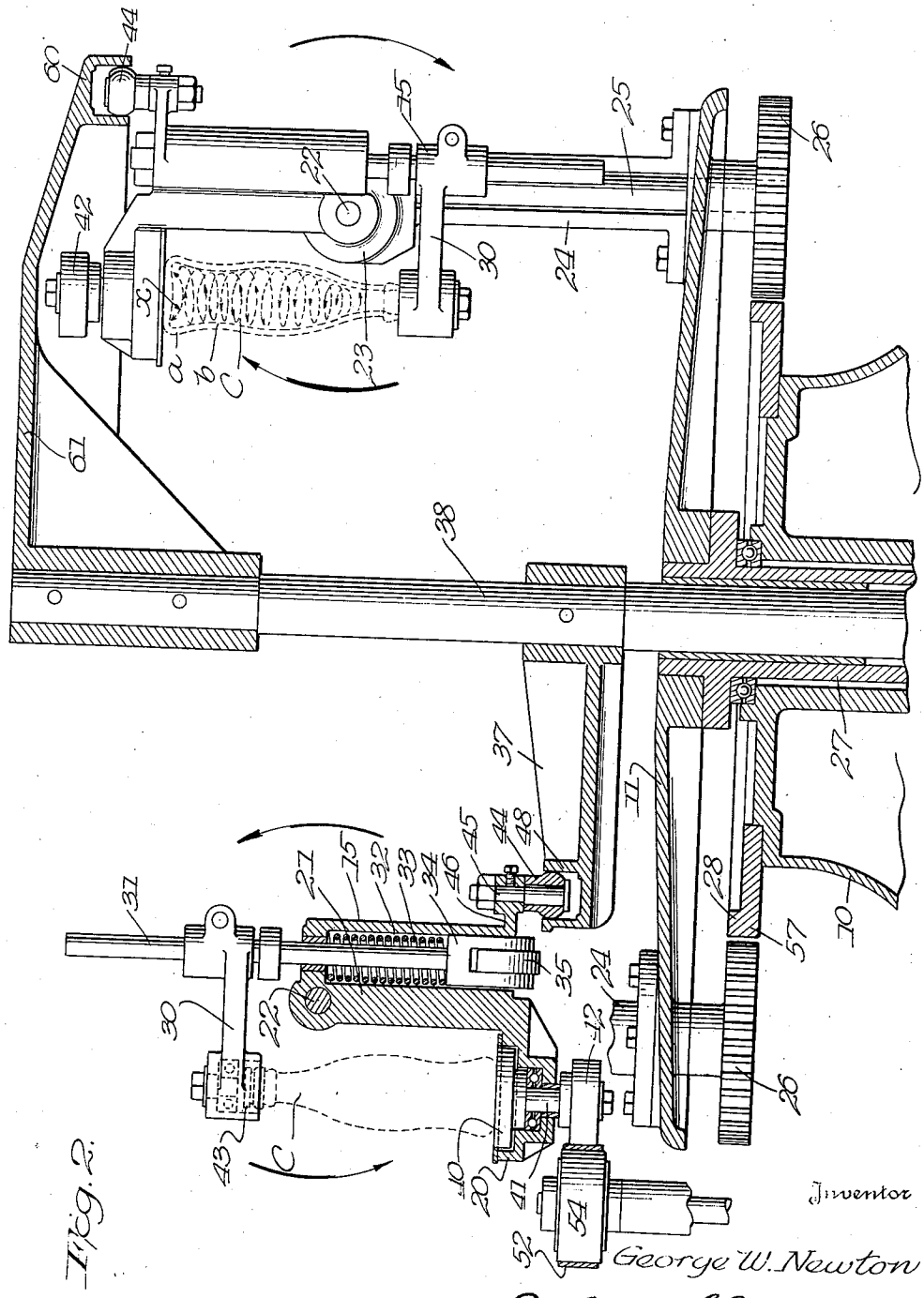

Fig. 2.

Inventor

George W. Newton

By Cushman, Darby & Cushman

Attorneys

Patented Sept. 24, 1940

2,216,088

UNITED STATES PATENT OFFICE

2,216,088

MIXING METHOD AND APPARATUS

George W. Newton, Baltimore, Md., assignor to Crown Cork & Seal Company, Inc., Baltimore, Md., a corporation of New York

Application July 29, 1938, Serial No. 222,042

15 Claims. (Cl. 259—54)

The present invention relates to a mixing apparatus and method and, more particularly, to an apparatus and method for mixing beverages such as "soft drinks" in the individual containers in which they are sold.

In the bottling of carbonated beverages, it is usual to first flow a quantity of syrup into the bottle or other container, and to then fill the remainder of the container with carbonated water. Machines have heretofore been developed and used for mixing the relatively heavy syrup, which tends to remain in the bottom of the bottle, with the carbonated water. However, such prior machines have not been altogether satisfactory, due to the fact that even with the most thorough mixing which such machines can give the bottle contents, it has still been possible for a very thin layer or coating of syrup to adhere to the wall of the lower portion of the bottle, that is, the portion of the bottle in which the syrup is originally placed.

Aside from the lack of complete distribution of syrup, an objection to such a coating of syrup has occurred in plants where light sensitive inspecting mechanisms are used to scan the bottle for the purpose of ascertaining whether any foreign matter is present in the bottle contents. One widely used inspection machine rotates the bottle, and then holds the bottle against rotation as its contents continue to rotate and while the bottle is moving past a photo-electric cell. By this arrangement the entire contents of the bottle are slowly swirled in front of the photo-electric cell. In order to be completely effective in detecting extremely small fragments of foreign matter in the bottle contents, the inspection mechanism must be so sensitive to the passage of light through the bottle that it will also respond to the shadowed or darkened area created in the lower portion of the liquid when the syrup left upon the wall of the bottle by prior mixers is moved off the bottle wall into the liquid due to the rotation of the bottle. The result is that such bottles may be discarded by the inspection mechanism, causing an entirely unnecessary waste.

The principal object of the present invention is to provide a mixing apparatus and method which will thoroughly mix the contents of a container and, more particularly, will thoroughly mix all syrup in a carbonated beverage container with the carbonated water in the container.

It has been found that the removal of all syrup from the wall of a bottle and its thorough distribution throughout the contents may be accomplished by rapidly spinning the bottle or other container about its longitudinal axis and then permitting the contents of the bottle to spin, while the bottle does not rotate or rotates at a slower speed. The initial rotation of the bottle to cause the contents to spin, and the subsequent step of permitting the bottle to be stationary or rotate at a slower speed while permitting the contents to continue spinning, causes the walls of the bottle to be thoroughly washed or scoured by the still spinning contents, with the result that no syrup will be left coated on the bottle wall. By combining this spinning of the bottle contents with a tilting or inversion of the bottle, a thorough mixing of the bottle contents is obtained.

Other objects and advantages of the invention will be apparent from the following drawings wherein,

Figure 1 is a plan view of a machine of the present invention and,

Figure 2 is a vertical cross sectional view on the line 2—2 of Figure 1.

The numeral 10 designates the base of the machine, in which is journalled a rotary table 11. The base 10 also supports a work table 12 at the front of the rotary table 11. A straight line endless conveyor 13 moves across the work table 12, this conveyor bringing bottles C or other containers to the present machine from a filling machine. A continuously rotating infeed dial 14 is mounted upon the work table 12 to remove bottles or other containers from the conveyor 13 and position them upon the container supports 15 carried upon the rotary table 11. An outfeed dial 16 is also provided upon the work table 12 to remove successive containers from the container supports 15 of the rotary table 11 and position them upon the opposite end of the conveyor 13 for removal from the machine. A guide plate 12a of usual construction cooperates with the dials 14 and 16 to direct the movement of the bottles. The structure described above is described in the patent issued to Robert J. Stewart on May 10, 1938, for Mixing apparatus, No. 2,117,226.

Each of the container supports 15 is similar to the container supports disclosed in the above mentioned Stewart patent in that it comprises a bottle supporting platform portion 20 including an inwardly and normally upwardly extending shank 21 which is fixed to a horizontal stub shaft 22 journalled in a housing 23 secured to the upper end of a standard 24 fixed to the upper surface of the rotary table 11. Each standard 24 partially encloses a vertical shaft 25 which has a

pinion 26 secured to its lower end and beneath the rotary table 11. The rotary table is fixed to a hollow vertical shaft 27 journalled in the base 10 and is rotated through any suitable driving means, not shown. Such rotation of the rotary table 11 causes the pinions 26 to move along and about a stationary element or ring 28 having gear-teeth arranged thereon, the engagement of the teeth of the pinion 26 with the gear-teeth causing the shaft 25 to be rotated. Each shaft 25 is geared to the corresponding stub shaft 22 through bevelled gearing within the housing 23 so that the stub shaft 22 will be correspondingly rotated to move the bottle support 15 through a vertical plane substantially radial with respect to the rotary table 11.

As is the case in the structure disclosed in the above mentioned Stewart patent, each bottle supporting element 15 includes a clamping arm 30 mounted upon a vertical rod 31, which rod is slidable in a bore 32 in the shank 21 of the bottle supporting element. The vertical rod 31 and clamp 30 carried thereby are urged downwardly to clamp the bottle by a spring 33 mounted in the bore 32. The upper end of spring 33 bears against the upper portion of the bore 32, while the lower end of the spring bears upon a block 34 fixed to the lower end of rod 31. Block 34 has a roller 35 journalled therein. As is the case in the Stewart machine, the clamping arm 30 of the container supporting element will be raised during the time that a container supporting element is adjacent the work table 12, and so that the container which is clamped on the element 15 may be removed by the dial 16 and another container placed upon the element by the dial 14. The clamping device is raised during this interval by reason of the fact that the roller 35 on rod 31 will contact with a shelf-like cam track 36 indicated in Figure 1. The cam track 36 is supported upon a segmental plate 37 secured to a stationary post 38 which projects up through the hollow and rotatable shaft 27 as best shown in Figure 2.

In order to permit the containers C to spin or rotate about their longitudinal axis so that the container contents will spin, the platform 20 of each container supporting element 15 has a container supporting disc 40 rotatably journalled therein as shown in Figure 2, the disc 40 including a stub shaft 41 which extends through a vertical bore in the platform 20 and has a wheel or pulley 42 secured to its lower end. The bottle engaging end of each clamping arm 30 has a disc 43 journalled therein and adapted to contact with the upper surface of the container closure. The discs 40 and 43 thus comprise a container gripping means.

At the moment that a container supporting element 15 is adjacent the work table 12 to receive a container from the infeed dial 14, the clamping head 30 of that platform will be raised due to the fact that the roller 35 will be contacting with the cam 36. The element 15 will also be held upright due to the fact that a roller 44 mounted on a vertical pin 45 fixed to a rearward extension 46 of the element 15 will be moving in an upwardly facing U-shaped cam track 48 supported on the segmental plate 37. At this moment, the pinion 26 of the platform will be opposite a plain or non-toothed portion 50 of the rack 28.

Immediately after a container has been positioned upon the rotatable disc 40 of the element 15 by the infeed dial 14, the roller 35 will move from the track 36, permitting the rod 31 and the clamping head 30 carried thereby to move downwardly by the action of spring 33 so that the container will be firmly clamped upon the platform 20 by the clamping arm 30. Almost immediately thereafter, the wheel or pulley 42 beneath the platform 20 will contact with the inner run of an endless belt 52 which moves about pulleys 53 and 54 suitably mounted adjacent the edge of the rotary table 11. Shaft 54 is driven by any suitable source of power, either by an independent motor or by gearing driven from the apparatus, so that the belt 52 will move at sufficiently high speed to rotate the pulley 42 and, therethrough, the container C, at a sufficiently high speed to cause the containers to be rapidly rotated so that the container contents will spin about the longitudinal axis of the container. It is found in practice that rotation of the containers at a speed of from 500 to 800 revolutions per minute will give the desired results with average contents. However, where the syrup placed in the containers C is relatively thick, a higher speed of rotation may be imparted to the containers.

While the pulley 42 is in contact with the moving belt 52, the roller 44 which controls the position of the container with respect to the vertical will still be in the cam track 48, but just after the pulley 42 moves out of contact with the belt 52, roller 44 will engage the left-hand end (Figure 1) of the cam track 48, which end has its outer wall 56 curved inwardly as shown in Figure 1, with the height of the wall gradually increasing toward its free end in the manner described in the above mentioned Stewart patent. At the same moment that the roller 44 first contacts with the end wall 56, the pinion 26 of the container supporting element 15 will engage a stretch of gear teeth 57 on the ring or rack member 28 so that the pinion will be rotated, thereby tilting the container supporting element 15 and the container C from the position shown at the left hand side of Figure 2 and in the direction of the arrow through an arc of substantially 180°, so that the container will be tilted or inverted.

When the above described tilting or inverting movement of the container is almost completed, the roller 44 will enter the lead end 59 of a second cam track 60 formed upon the edge of a second segmental plate 61 supported upon the upper end of the post 38. The cam track 60 is also generally of U-shaped cross section but is downwardly facing as shown at the right hand side of Figure 2. The lead end 59 of cam track 60 comprises spaced vertically extending walls 62 and 63 between which the roller 44 will move during the latter portion of the inverting movement imparted to the supporting element 15 by the engagement of pinion 26 with the rack teeth 57.

It will be understood that while the rotation of the container C about its longitudinal axis will stop a short time after the pulley 42 has moved out of contact with belt 62, the contents of the container will continue to spin for a considerably longer time, such spinning action progressing during the subsequent tilting movement of the container through an arc of 180° for the purpose of inverting the same. The result of the spinning of the contents during and after inversion of the bottle will cause the container contents to be quite thoroughly mixed.

In some instances, it may be found desirable to tilt or invert the containers before rotating them on a longitudinal axis to spin the contents.

By this latter procedure, the syrup is moved toward the neck or small end of the bottle before spinning is initiated and, when spinning occurs, the heavier syrup is moved upwardly into the larger portion of the bottle by centrifugal action. Such an arrangement is disclosed and claimed in my application for Mixing method and apparatus, Serial No. 282,871, filed July 5, 1939. However, as is clear from the above, the present invention contemplates rotating the container to obtain spinning of the contents either before or after the container has been inverted.

The container will remain in the inverted position indicated at the right hand portion of Figure 2 until it reaches the outfeed end **65** of the cam track **60**. This end of the cam track is substantially opposite a second series of gear teeth **66** with which the pinion **26** will engage. The outfeed end **65** of the cam track is so designed that the roller **44** will move along the same during the initial portion of the turning movement of the bottle resulting from the engagement of pinion **26** with the gear teeth **66**.

Movement of the pinion along the gear teeth **66** will cause the container to be returned to upright position. In the embodiment of the invention shown herein, the container is moved to upright position by a movement which is a continuation of the movement given the container by the gear teeth **57**. That is, the container will first be moved through substantially 180° by the gear teeth **57** and will be moved an additional 180° in the same direction to be returned to upright position.

At the conclusion of the uprighting movement given the container by the gear teeth **66**, the roller **44** will move into the infeed end **67** of the cam track **48** and, as heretofore described, this cam track will maintain the container in upright position while the clamping arm **30** is raised so that the bottle may be removed from the platform disc **40** by the outfeed dial **14**.

The length of the movement of the container in an upright position prior to leaving the dial **16** is sufficiently long to permit all bubbles which might be created by the preceding agitation to rise through the liquid, so that the contents will be in a quiescent state. However, it is found that the movements imparted to the container contents by the present invention do not cause as much foam bubbling as do prior mixers. This is a matter of importance when the bottles are to be immediately moved to a photo-cell inspection mechanism, since such mechanisms will reject a bottle having a substantial amount of gas bubbles therein.

The apparatus and method of the present invention are particularly advantageous in mixing the contents of a bottle C of the type specifically illustrated in the drawings, and wherein the bottle bottom portion which receives the syrup is of relatively large diameter and merges into a restricted portion just above. In a bottle of this type, it is advantageous to invert the bottle so that the heavy syrup will flow toward the then lowermost neck and mouth. As indicated at the right-hand portion of Figure 2, wherein the bottle C is shown in vertical section, when the contents spin, with the bottle stationary, the contents will be thrown outwardly by centrifugal force at the enlarged portion *a* at the base of the bottle. Since the contents are whirling upwardly and outwardly from the adjacent restricted portion *b*, they tend to climb the enlarging wall to wipe the same free of syrup as indicated by the line *x*, which indicates the concave form which the surface of the liquid assumes during spinning. As the container tilts, all surfaces of the bottle wall will be thoroughly washed.

As a result, the portion *a*, including the base wall of the bottle, which might normally still have a thin coating of syrup thereon, will be thoroughly swept or scoured by the wiping action of the contents. Obviously, the same effect will be obtained, if the spinning of the contents is initiated after inversion, since if the drive of the spinning means is made more rapid, equally good results will be obtained.

It will be noted that by the method and apparatus of the present invention, involving tilting and uprighting the containers, or moving the containers end over end, and causing the contents to spin with respect to the container, and after the container has ceased to rotate, the container contents are thoroughly mixed and all syrup is removed from the container wall.

Subject matter of my invention disclosed but not claimed herein is claimed in my application for Mixing method and apparatus, Serial No. 254,102, filed February 1, 1939, or in my application for Mixing method apparatus, Serial No. 282,871, filed July 5, 1939.

The phraseology employed in the specification is for the purpose of description and is not intended to limit the invention, the scope of the invention being indicated in the claims.

I claim:

1. In a mixing apparatus, a base, a rotary table, a container supporting element journaled on said table for tilting movement with respect to said table, means to deliver a container to and remove the same from said element, said element including container gripping means rotatable with respect thereto, means to rotate said gripping means to spin the container about its longitudinal axis, and means to move said container supporting element to tilt the container.

2. In a mixing apparatus, a base, a rotary table, a container supporting element journaled on said table for tilting movement in a plane substantially radial with respect to said table, means to deliver a container to and remove the same from said element, said element including container gripping means rotatable with respect thereto, means to rotate said gripping means to spin the container about its longitudinal axis, and means to move said container supporting element in a plane substantially radial with respect to said table to tilt the container.

3. An apparatus as specified in claim 1 in which the tilting movement of the supporting element and container follows the spinning of the gripping means and container.

4. An apparatus as specified in claim 1 in which the means for spinning the container comprises an element engageable by the rotary gripping means as the table rotates.

5. An apparatus as specified in claim 1 in which the means for spinning the container comprises a traveling belt disposed adjacent the path of movement of the container supporting element and engageable by the gripping means of the latter during the rotary movement of the table.

6. In a mixing apparatus, a base, a rotary table, container supporting elements journaled on said table for tilting movement with respect to said table, means to deliver containers to and remove the same from said elements, said elements including container gripping means rotatable with respect thereto, means to rotate said gripping means to spin the containers about their longitudinal axes, means to move said container sup-

porting elements to tilt the containers immediately following the spinning movement, whereby the contents will rotate with respect to the containers while the latter are inverted.

7. In a beverage mixing apparatus, a rotary table, a plurality of supports for containers on said table, said supports being tiltable with respect to said table and including means for gripping the containers adjacent their ends, said means being rotatable with respect to said supports to permit spinning of the containers about their longitudinal axes while gripped, means operative as the table rotates to tilt the supports and containers carried thereby, and means operative as the table rotates to spin said gripping means and the containers carried thereby about the longitudinal axes of the containers.

8. In a beverage mixing apparatus, a rotary table, a plurality of supports for containers on said table, said supports including means for gripping the containers at their ends, said gripping means being rotatable to permit spinning of the containers about their longitudinal axes, means operative during an initial portion of the rotation of said table to rotate the supports to spin the containers, and means operative during the following portion of the rotary movement of the table to actuate the supports to tilt the containers to substantially inverted positions whereby the contents will rotate with respect to the containers while the latter are inverted.

9. The method of mixing the contents of a filled beverage container which comprises the successive steps of first spinning the container at a relatively high speed about its longitudinal axis while maintaining it against tilting movement and then immediately substantially inverting the container whereby the contents will be rotated with respect to the container while the latter is inverted, the speed of spinning being of the order of several hundred revolutions per minute whereby to be sufficiently high to thoroughly remove syrup deposit from the container wall.

10. In a mixing apparatus, a base, a rotary table, a container supporting element journalled on said table for tilting movement with respect to said table, means to deliver a container to and remove the same from said element, said element including container gripping means rotatable with respect thereto, means to rotate said gripping means to spin the container about its longitudinal axis and means to subsequently tilt said container supporting element to tilt the container.

11. In a mixing apparatus, a base, a rotary table, a container supporting element journalled on said table for tilting movement with respect to said table, means to deliver a container to and remove the same from said element, said element including container gripping means rotatable with respect thereto, means to rotate said gripping means to spin the container while substantially upright to rotate its contents about its longitudinal axis and means to subsequently move said element to tilt the container in a plane radial with respect to said rotary table.

12. In a mixing apparatus, a base, a rotary table, a container supporting element journalled on said table for tilting movement with respect to said table, means to deliver a container to and remove the same from said element, said element including container gripping means rotatable with respect thereto, means to rotate said gripping means to spin the container to rotate its contents about its longitudinal axis and means to subsequently move said element to tilt the container before rotation of the container contents stops.

13. In a beverage mixing apparatus, a rotary table, a plurality of supports for containers on said table, and means for actuating said supports as the table rotates to tilt containers supported thereby during one portion of the table movement, and means to spin the containers about their longitudinal axes at a relatively high speed of the order of several hundred revolutions per minute during another portion of the table movement.

14. The method of mixing the contents of a beverage container filled with syrup and water which comprises the successive steps of tilting the container and spinning the container about its longitudinal axis while maintaining the container against tilting movement, the speed of spinning being of the order of several hundred revolutions per minute whereby to be sufficiently high to remove syrup deposit from the container wall.

15. In an apparatus for mixing the contents of a container, the combination with a rotary member, of a container supporting element mounted to move on said rotary member in a plane radial to said rotary member, said container supporting element supporting the container to rotate on its longitudinal axis in said supporting member, and means for rotating the container on its longitudinal axis while supported in said supporting element.

GEORGE W. NEWTON.