US 20060089529A1

(19) **United States**

(12) **Patent Application Publication** (10) **Pub. No.: US 2006/0089529 A1**

Tartaglia et al. (43) **Pub. Date: Apr. 27, 2006**

(54) **ENDOSCOPE WITH REGIDIZABLE INTRODUCER SHEATH**

(76) Inventors: **Joseph M. Tartaglia**, Morgan Hill, CA (US); **Amir Belson**, Sunnyvale, CA (US); **Robert Matthew Ohline**, Redwood City, CA (US)

Correspondence Address:
WILSON SONSINI GOODRICH & ROSATI
650 PAGE MILL ROAD
PALO ALTO, CA 94304-1050 (US)

(21) Appl. No.: **11/228,013**

(22) Filed: **Sep. 14, 2005**

Related U.S. Application Data

(63) Continuation of application No. 10/229,814, filed on Aug. 27, 2002, now Pat. No. 6,974,411, which is a continuation-in-part of application No. 10/087,100, filed on Mar. 1, 2002, now Pat. No. 6,800,056, which is a continuation-in-part of application No. 09/969,927, filed on Oct. 2, 2001, now Pat. No. 6,610,007, which is a continuation-in-part of application No. 09/790,204, filed on Feb. 20, 2001, now Pat. No. 6,468,203.

(60) Provisional application No. 60/194,140, filed on Apr. 3, 2000.

Publication Classification

(51) **Int. Cl.**
A61B 1/00 (2006.01)

(52) **U.S. Cl.** **600/114**; 600/146

(57) **ABSTRACT**

An endoscope with guiding apparatus is described herein. A steerable endoscope is described having an elongate body with a manually or selectively steerable distal portion, an automatically controlled portion, a flexible and passively manipulated proximal portion, and an externally controlled and manipulatable tracking rod or guide. The tracking rod or guide is positioned within a guide channel within the endoscope and slides relative to the endoscope. When the guide is in a flexible state, it can conform to a curve or path defined by the steerable distal portion and the automatically controlled portion. The guide can then be selectively rigidized to assume that curve or path. Once set, the endoscope can be advanced over the rigidized guide in a monorail or "piggy-back" fashion so that the flexible proximal portion follows the curve held by the guide until the endoscope reaches a next point of curvature within a body lumen.

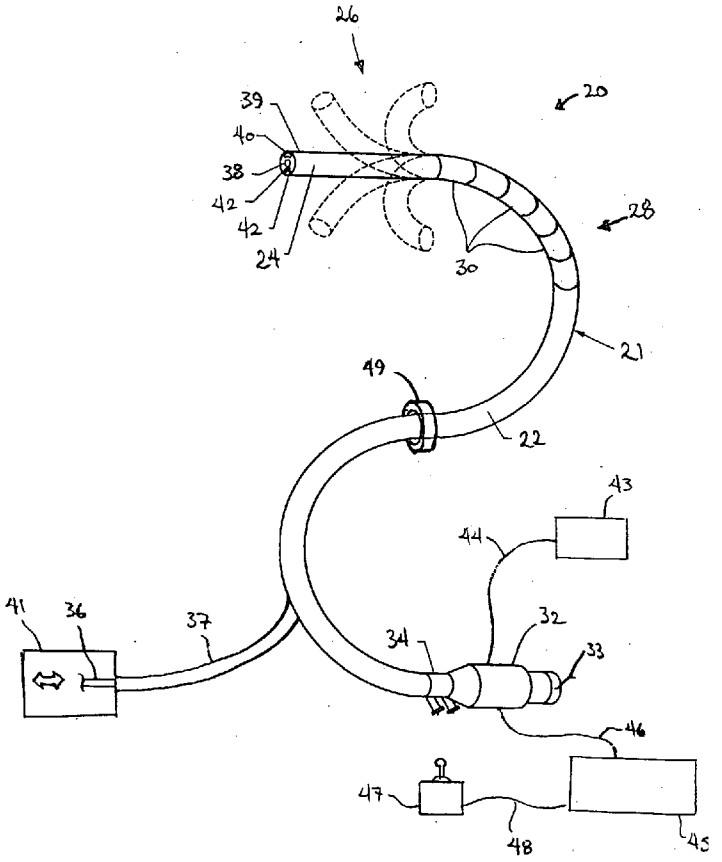

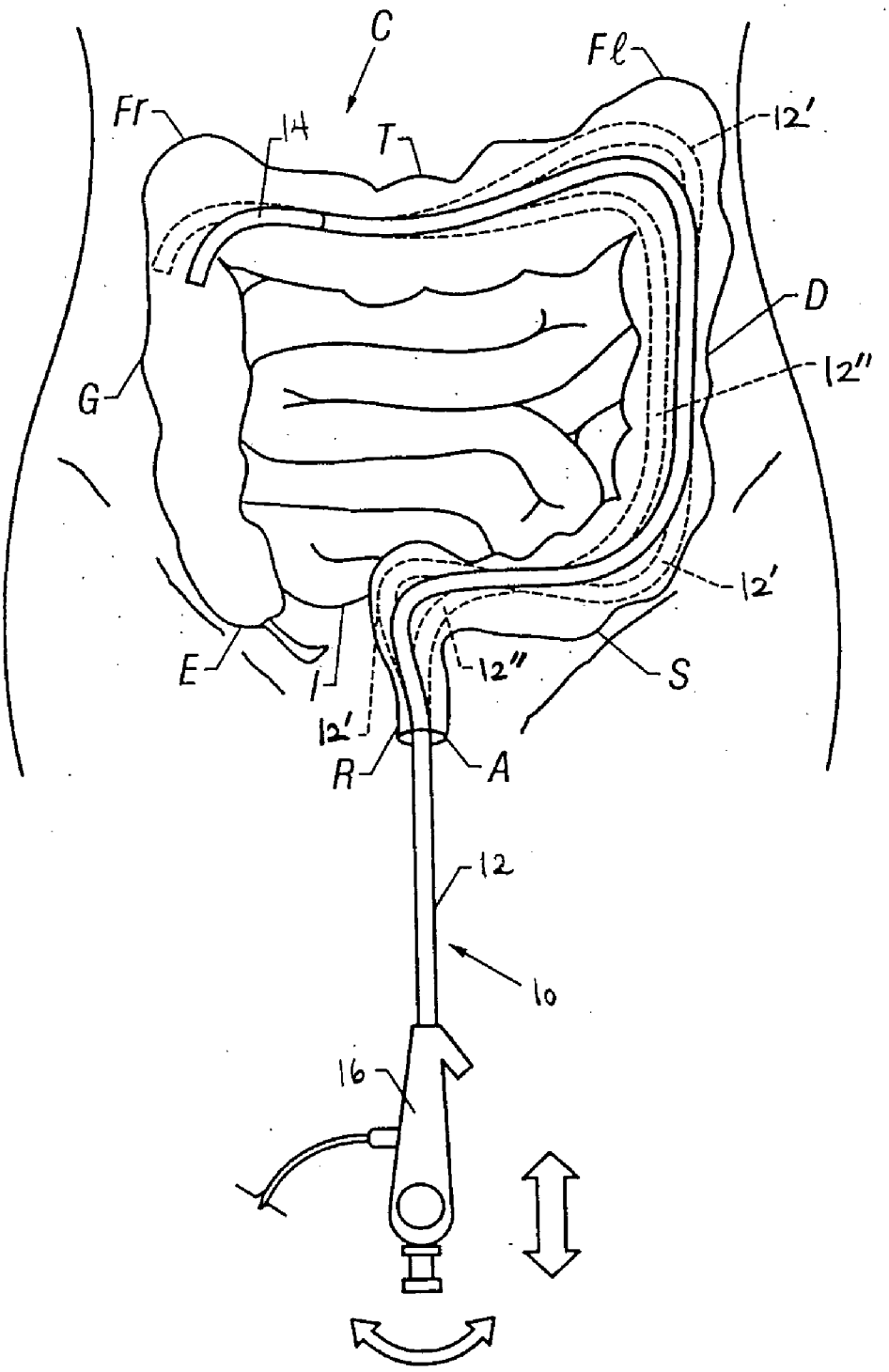

FIG. 1
(Prior Art)

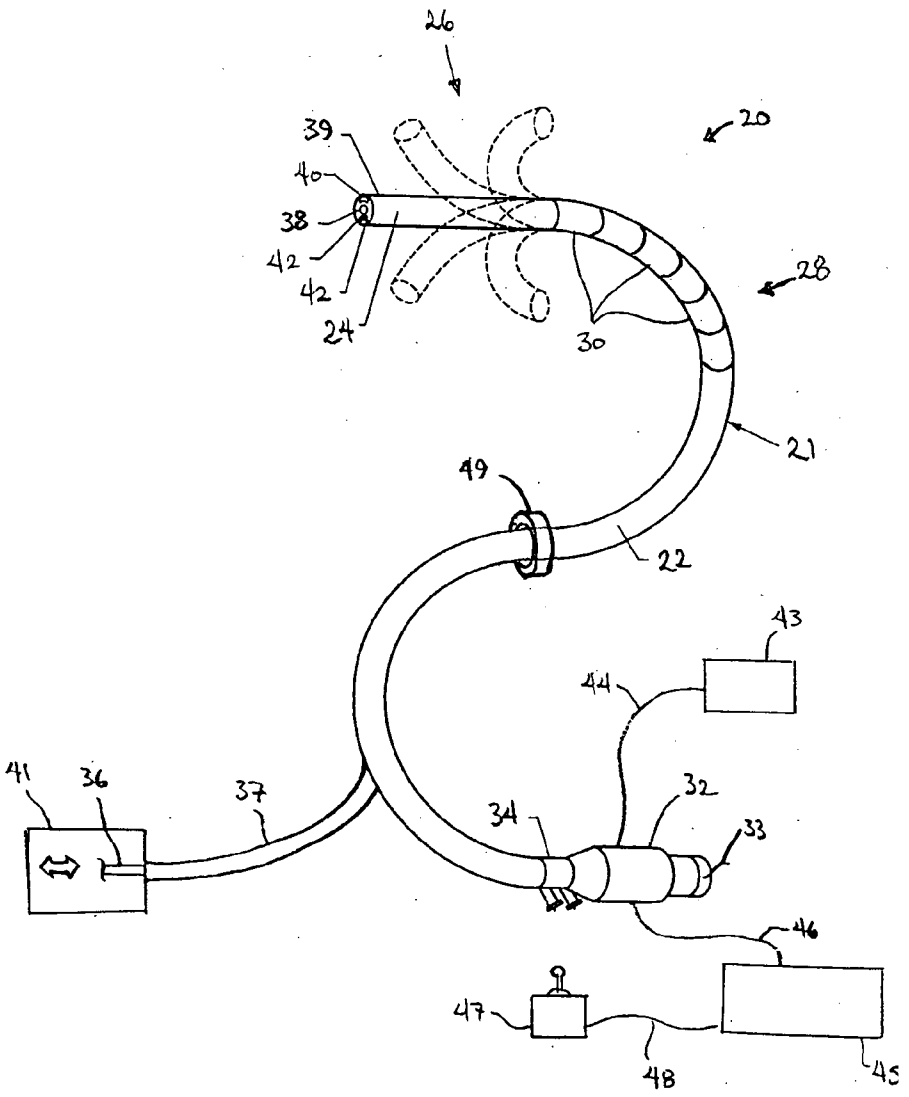
26
20
39
40
38
42
42
24
28
30
21
49
22
43
44
41
36
37
34
32
33
46
47
48
45

FIG. 2A

Fig. 2B

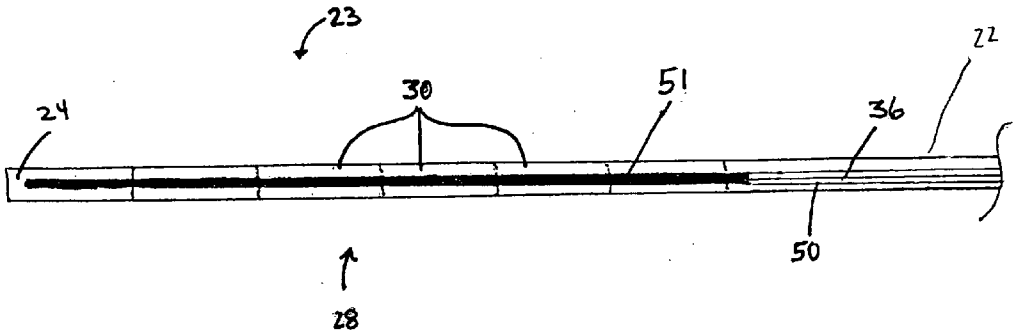

Fig. 2C

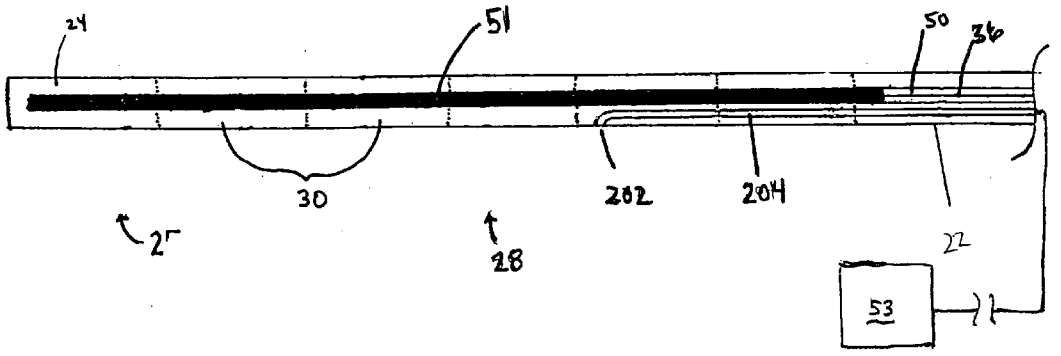

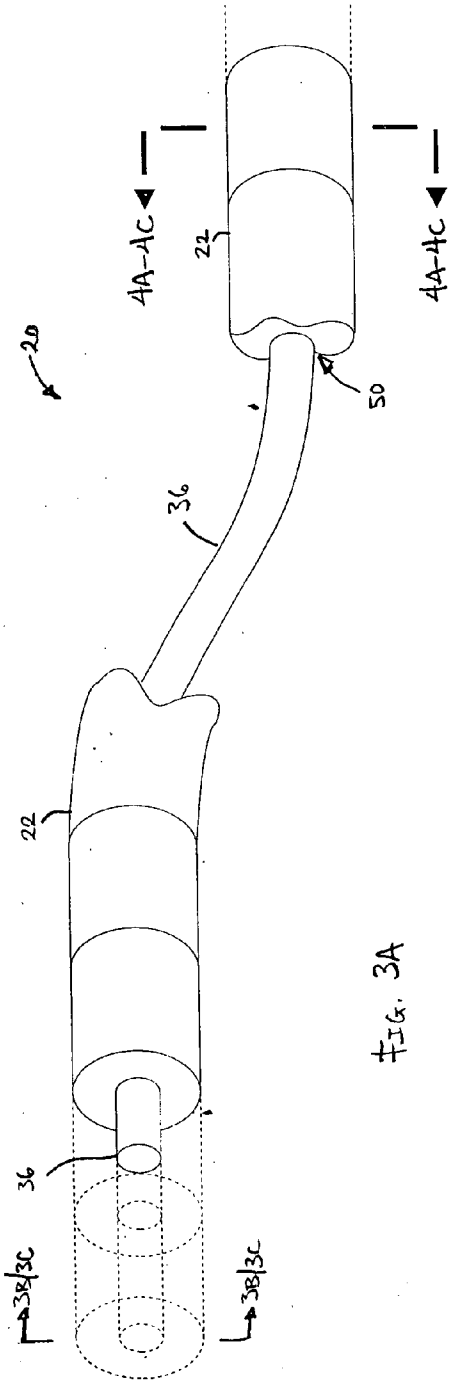

FIG. 3A

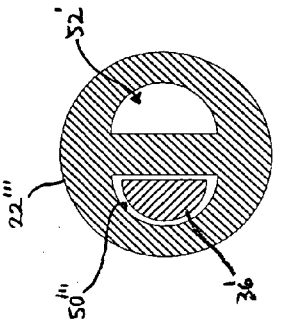

FIG. 4C

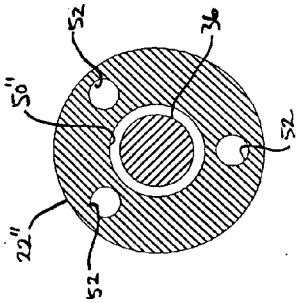

FIG. 4B

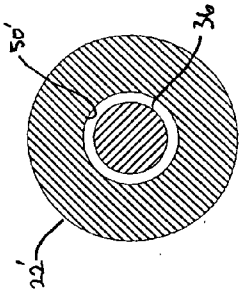

FIG. 4A

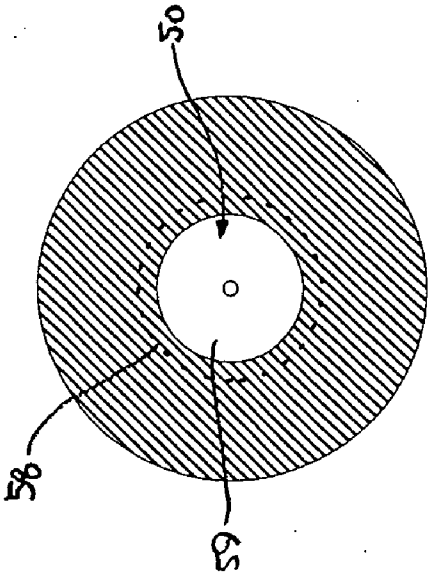

FIG. 3C

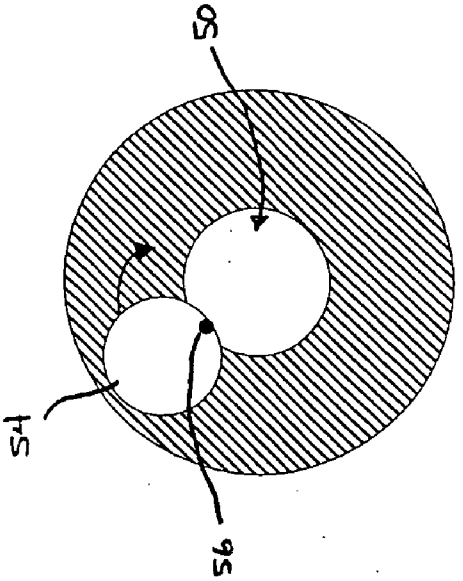

FIG. 3B

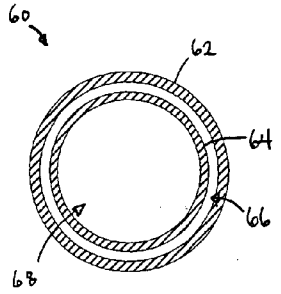

FIG. 5A

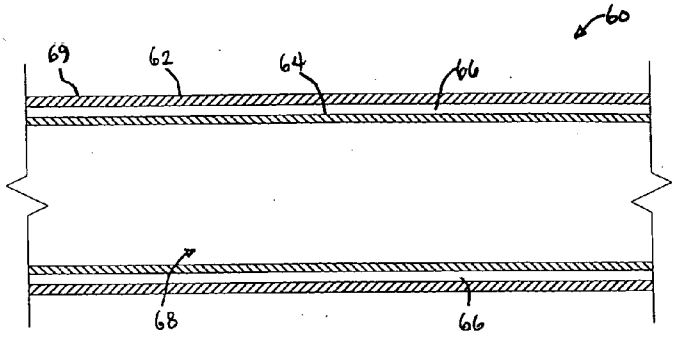

FIG. 5B

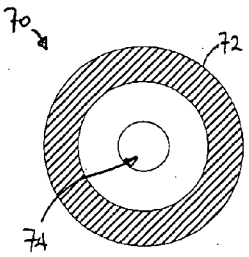

FIG. 6A

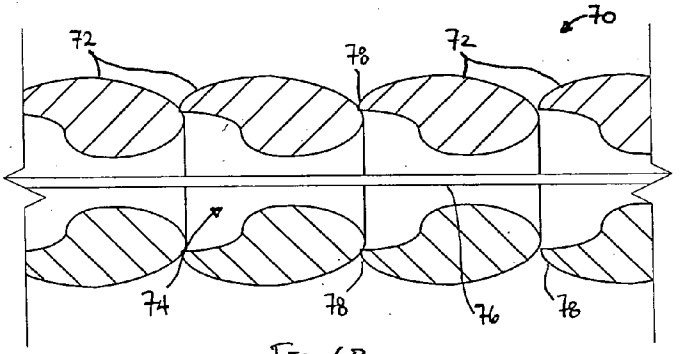

FIG. 6B

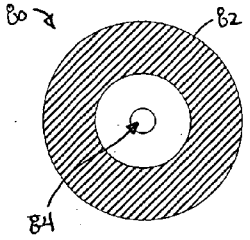

FIG 7A

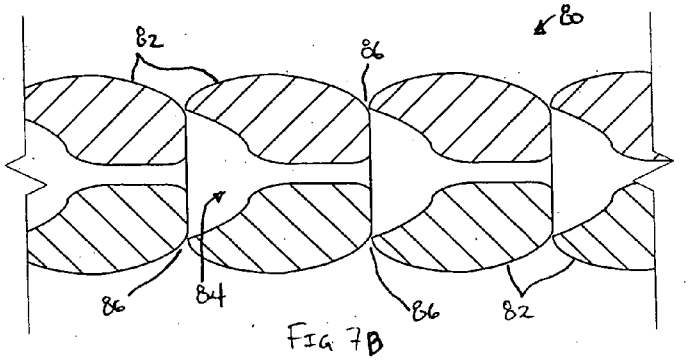

FIG 7B

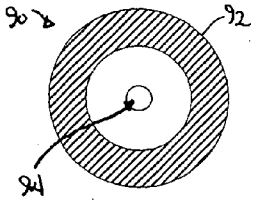

FIG. 8A

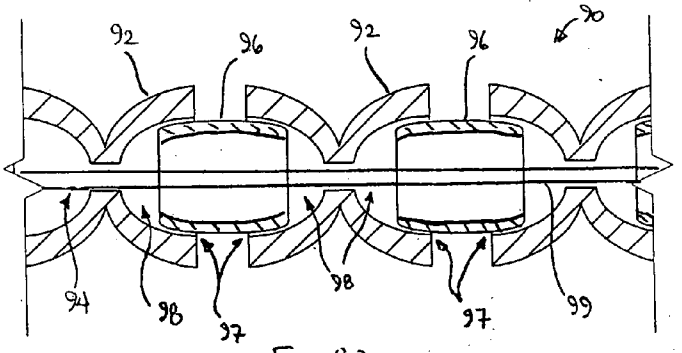

FIG. 8B

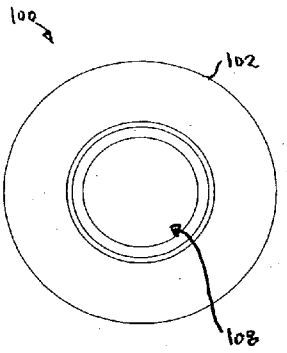

Fig. 9A

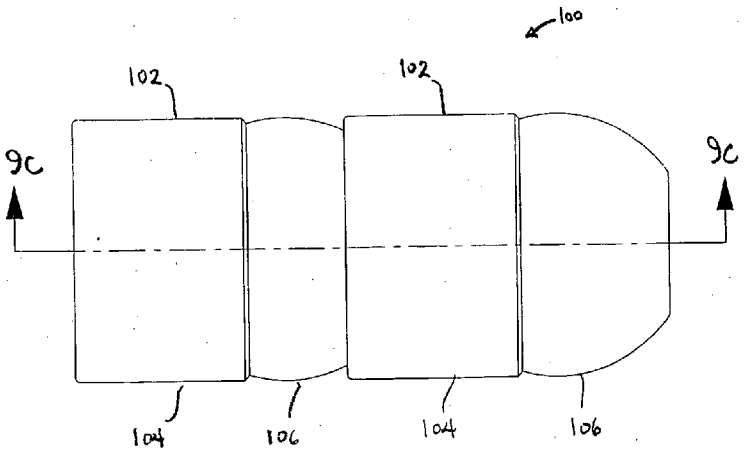

Fig. 9B

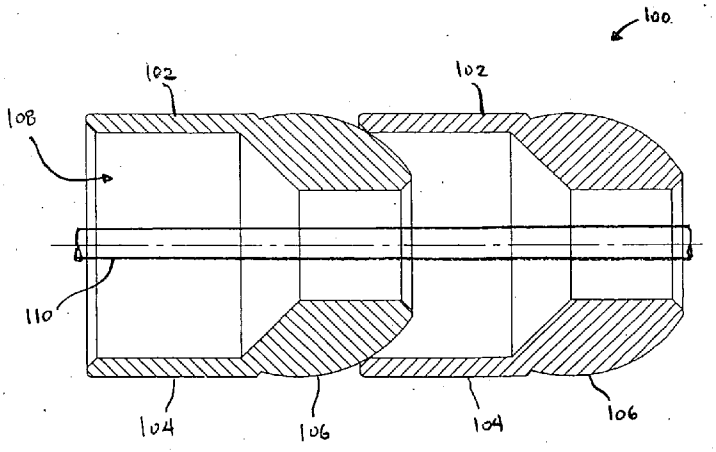

Fig 9C

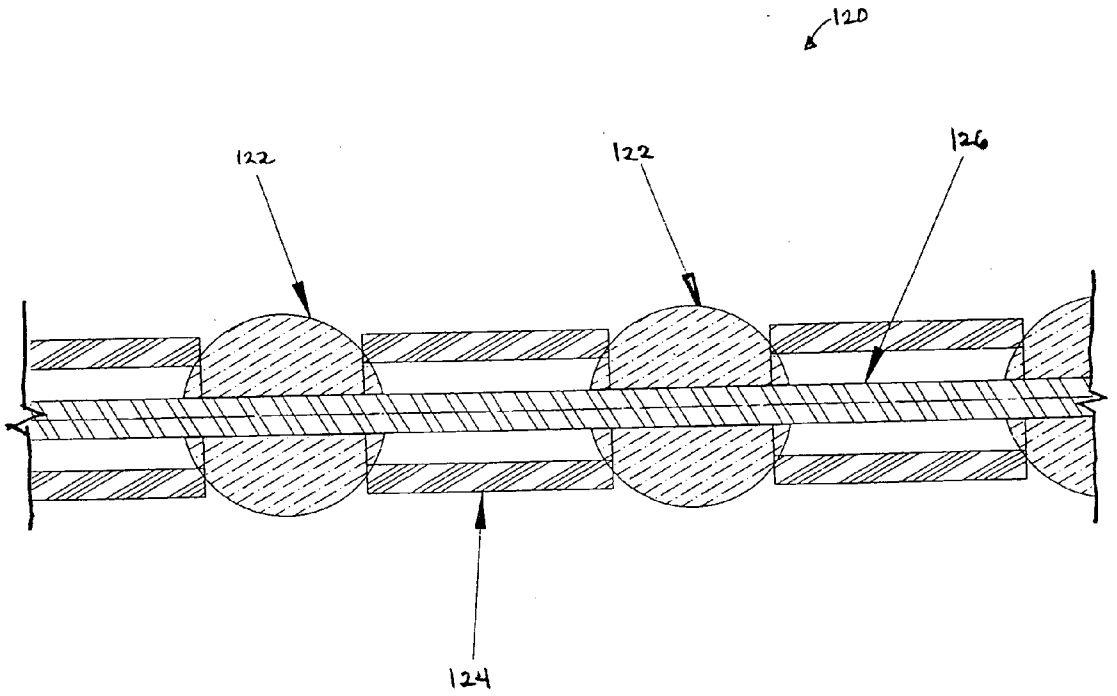

FIG. 10

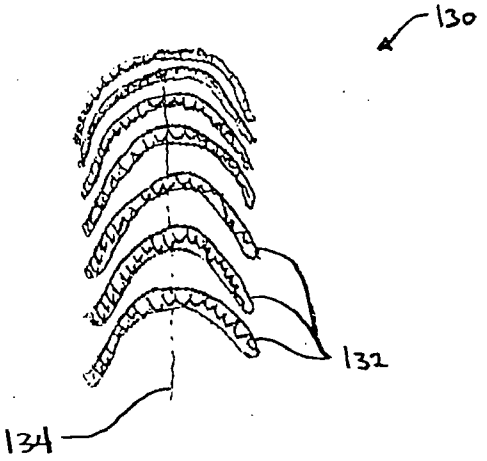

FIG. 11A

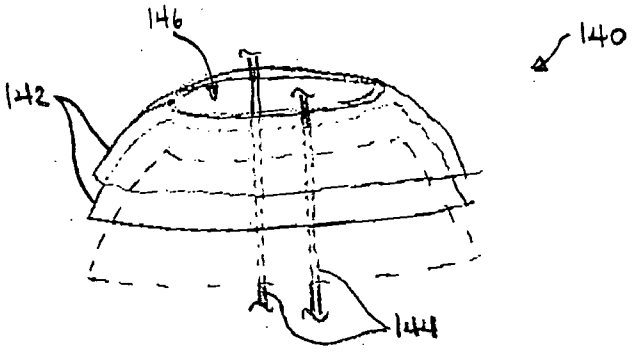

FIG. 11B

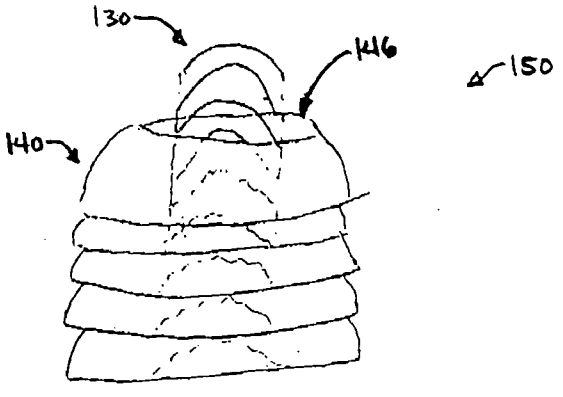

FIG. 11C

Fig. 12A

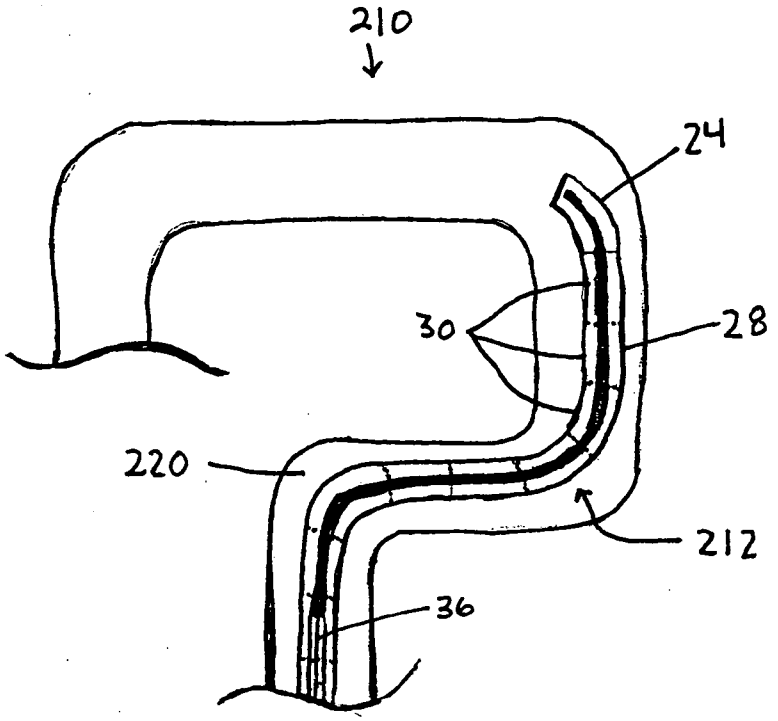

Fig. 12B

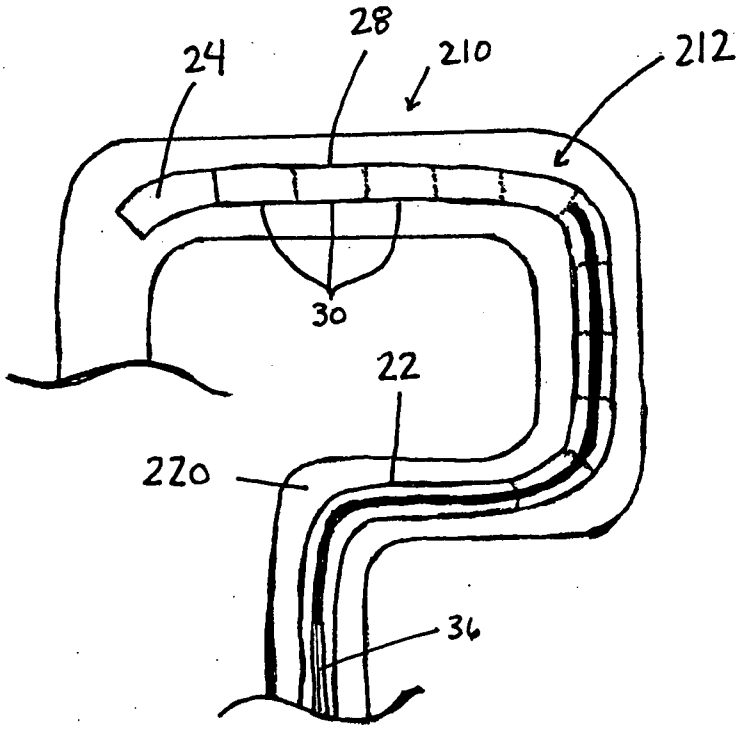

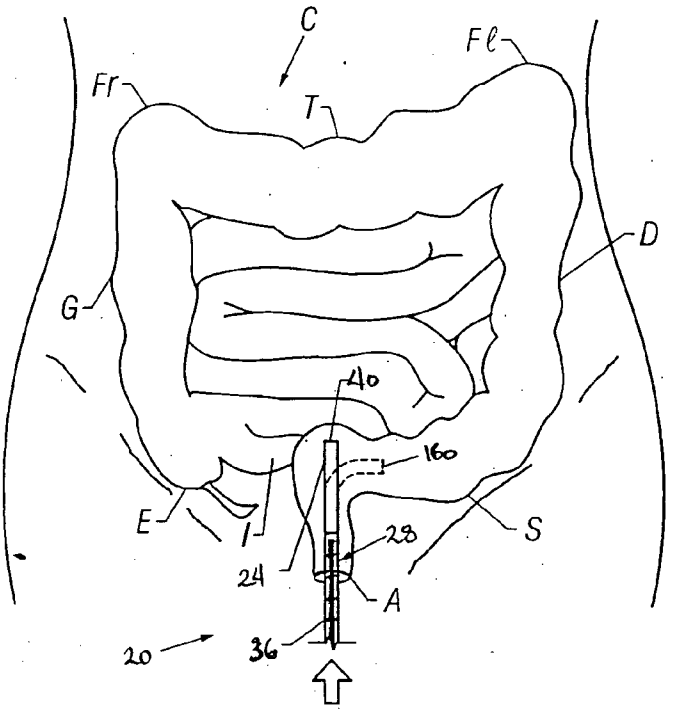

FIG. 13A

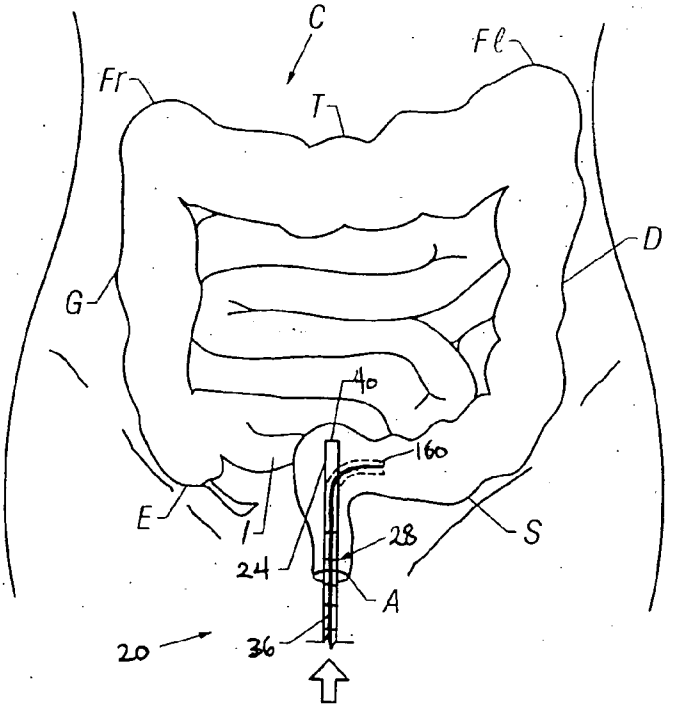

FIG. 13B

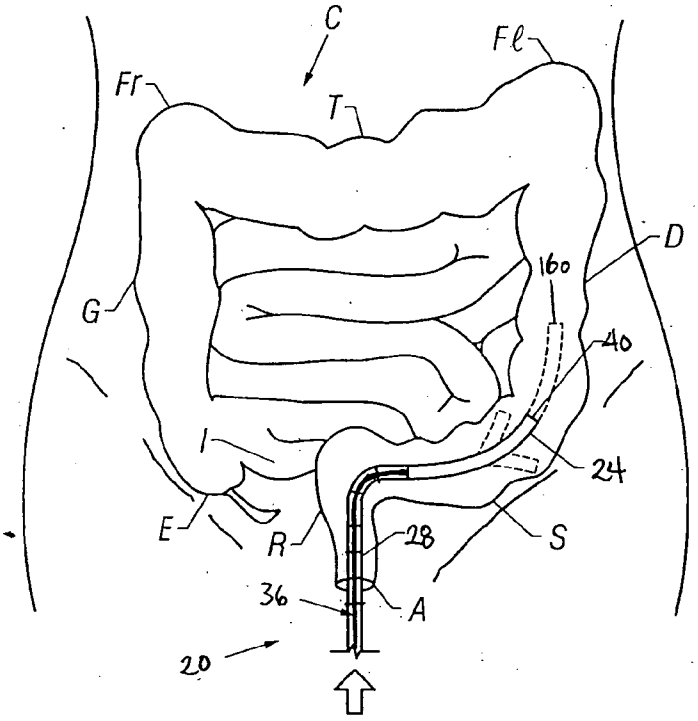

FIG. 13C

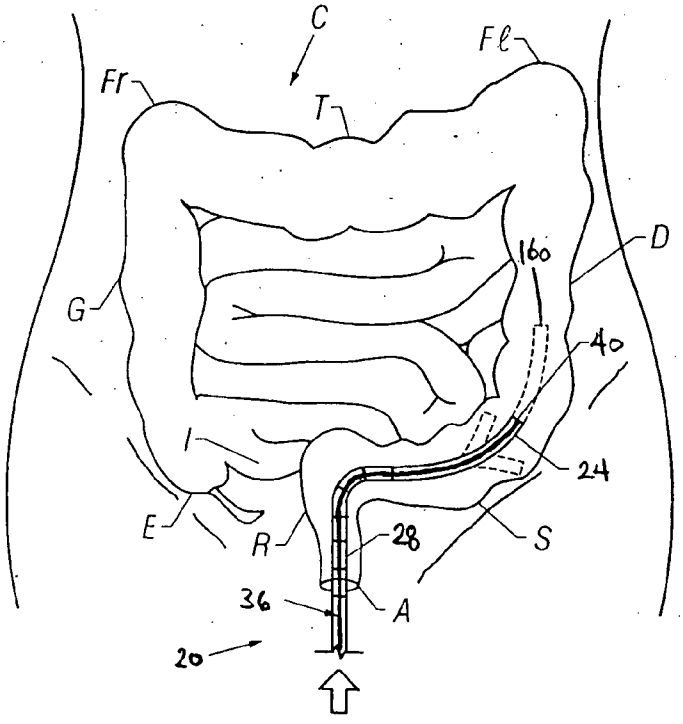

FIG. 13D

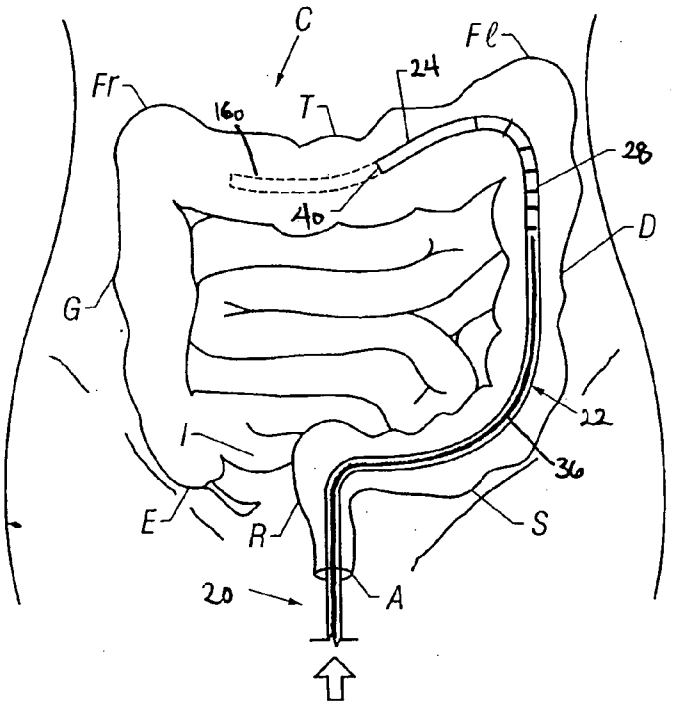

FIG. 13E

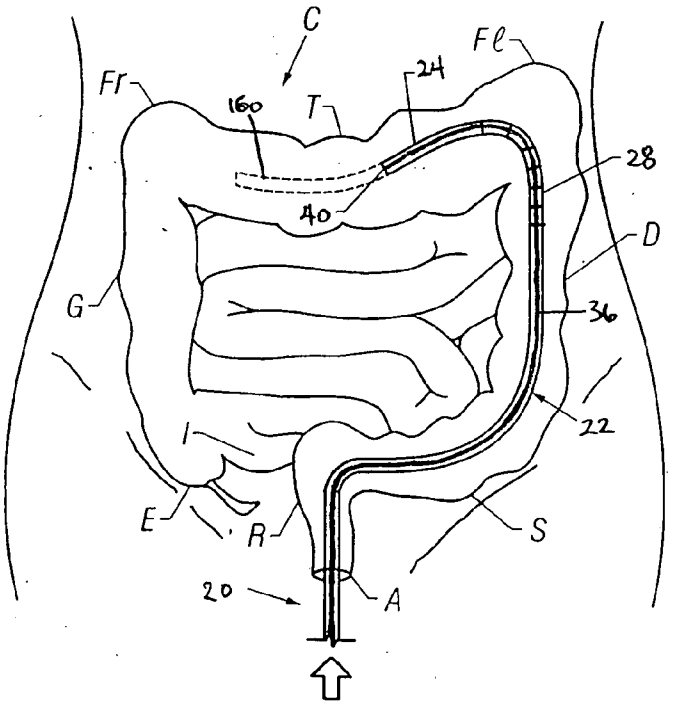

FIG. 13F

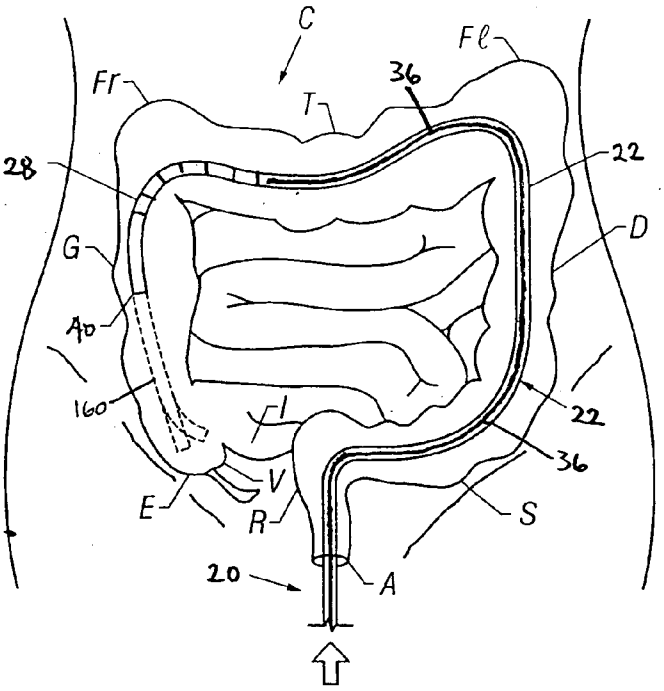

FIG. 13G

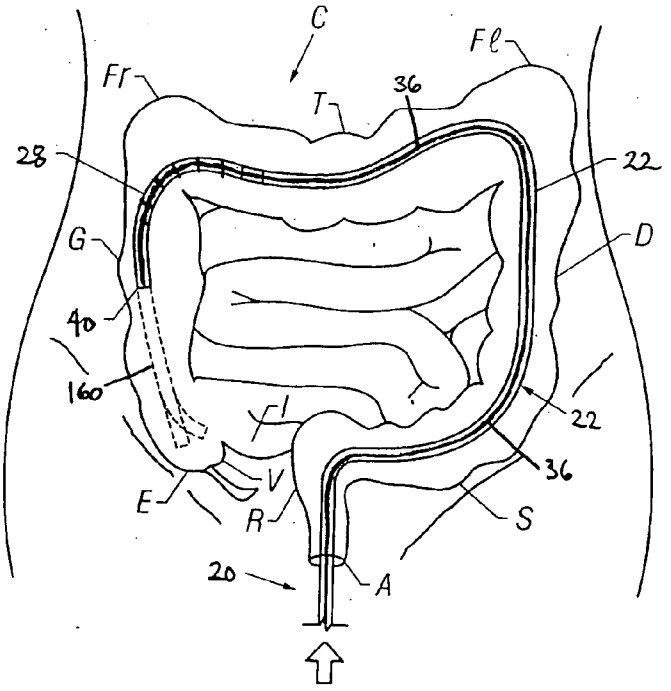

FIG. 13H

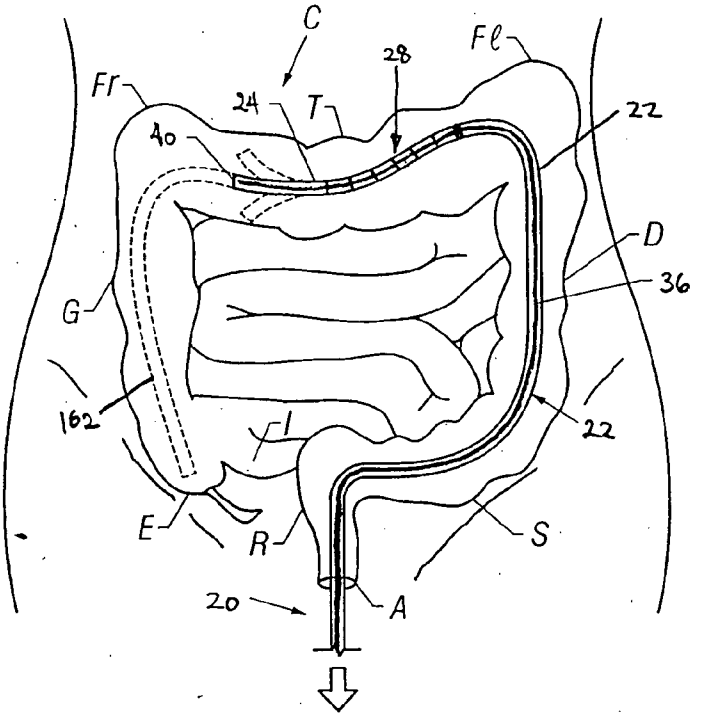

FIG. 14A

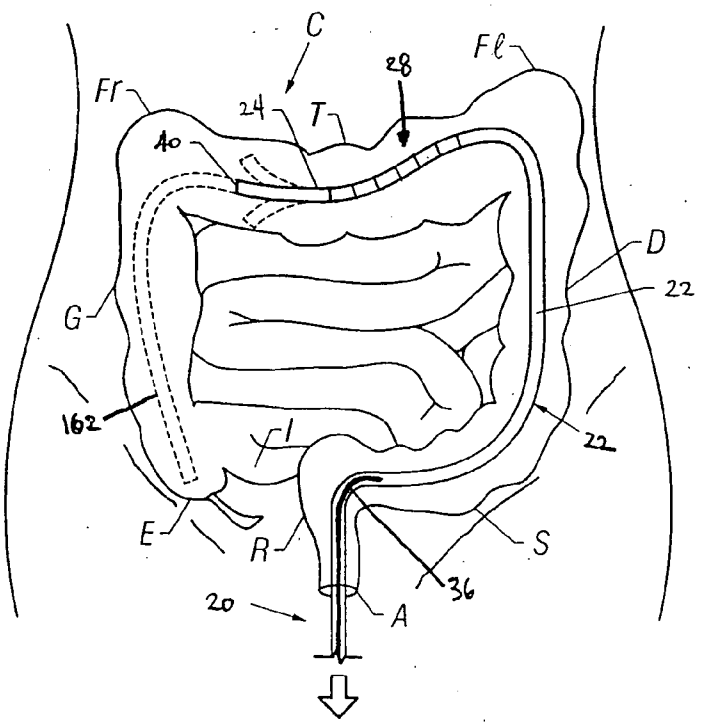

FIG. 14B

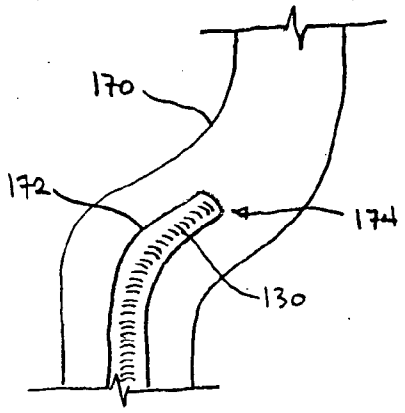

FIG. 15A

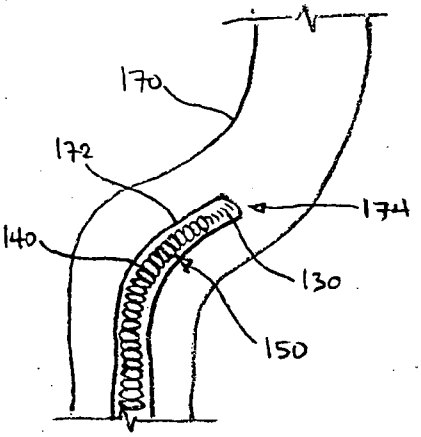

FIG. 15B

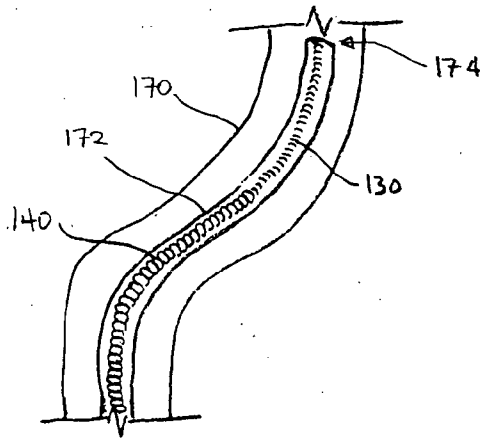

FIG. 15C

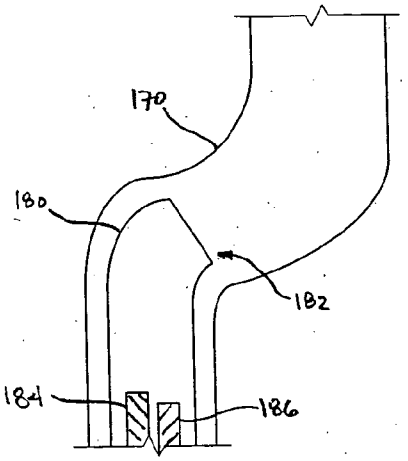

FIG. 16A

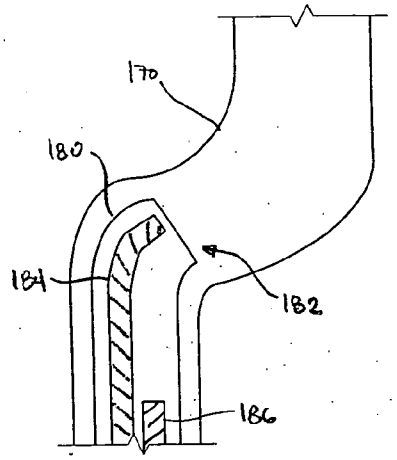

FIG. 16B

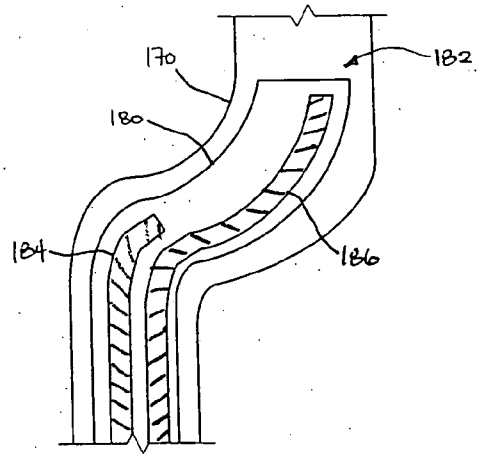

FIG. 16C

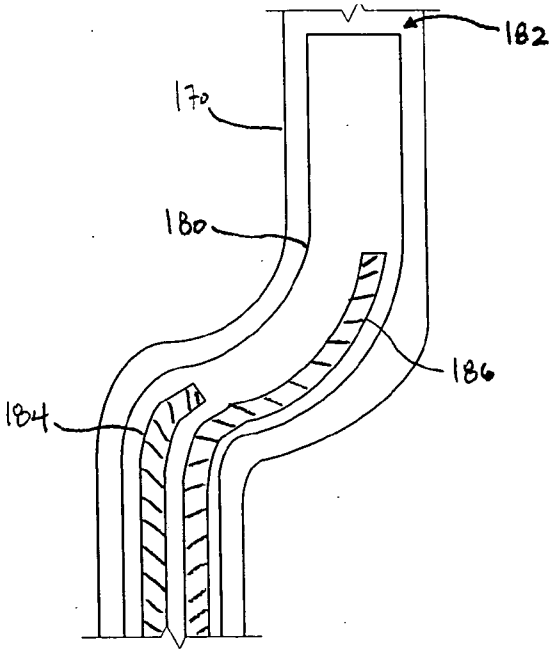

FIG. 16D

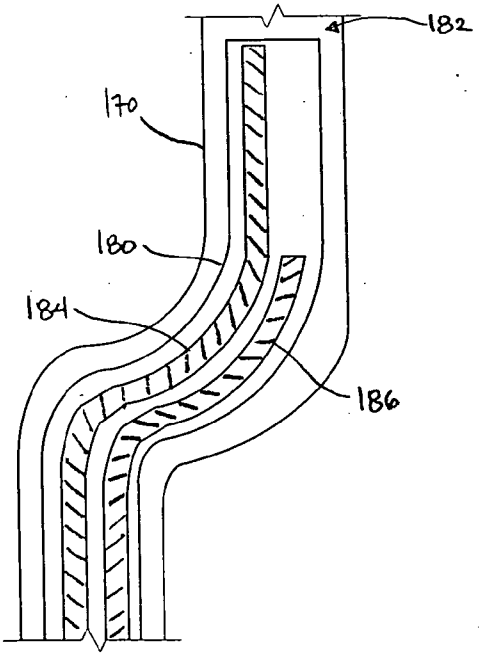

FIG. 16E

ENDOSCOPE WITH REGIDIZABLE INTRODUCER SHEATH

CROSS-REFERENCE TO RELATED APPLICATIONS

[0001] This application is a continuation-in-part of U.S. patent application Ser. No. 10/087,100 entitled "Endoscope with Guiding Apparatus" filed Mar. 1, 2002, which is a continuation-in-part of U.S. patent application Ser. No. 09/969,927 entitled "Steerable Segmented Endoscope and Method of Insertion" filed Oct. 2, 2001, which is a continuation-in-part of U.S. patent application Ser. No. 09/790,204 entitled "Steerable Endoscope and Improved Method of Insertion" filed Feb. 20, 2001, which claims the benefit of priority to U.S. Provisional Patent Application Ser. No. 60/194,140 entitled the same and filed Apr. 3, 2000, all of which are incorporated herein by reference in their entirety.

FIELD OF THE INVENTION

[0002] The present invention relates generally to endoscopes and endoscopic procedures. More particularly, it relates to a method and apparatus to facilitate insertion of a flexible endoscope along a tortuous path, such as for colonoscopic examination and treatment.

BACKGROUND OF THE INVENTION

[0003] An endoscope is a medical instrument for visualizing the interior of a patient's body. Endoscopes can be used for a variety of different diagnostic and interventional procedures, including colonoscopy, bronchoscopy, thoracoscopy, laparoscopy and video endoscopy.

[0004] Colonoscopy is a medical procedure in which a flexible endoscope, or colonoscope, is inserted into a patient's colon for diagnostic examination and/or surgical treatment of the colon. A standard colonoscope is typically 135-185 cm in length and 12-19 mm in diameter, and includes a fiberoptic imaging bundle or a miniature camera located at the instrument's tip, illumination fibers, one or two instrument channels that may also be used for insufflation or irrigation, air and water channels, and vacuum channels. The colonoscope is inserted via the patient's anus and is advanced through the colon, allowing direct visual examination of the colon, the ileocecal valve and portions of the terminal ileum.

[0005] Insertion of the colonoscope is complicated by the fact that the colon represents a tortuous and convoluted path. Considerable manipulation of the colonoscope is often necessary to advance the colonoscope through the colon, making the procedure more difficult and time consuming and adding to the potential for complications, such as intestinal perforation. Steerable colonoscopes have been devised to facilitate selection of the correct path though the curves of the colon. However, as the colonoscope is inserted farther and farther into the colon, it becomes more difficult to advance the colonoscope along the selected path. At each turn, the wall of the colon must maintain the curve in the colonoscope. The colonoscope rubs against the mucosal surface of the colon along the outside of each turn. Friction and slack in the colonoscope build up at each turn, making it more and more difficult to advance, withdraw, and loop the colonoscope. In addition, the force against the wall of the colon increases with the buildup of friction. In cases of extreme tortuosity, it may become impossible to advance the colonoscope all of the way through the colon.

[0006] Steerable endoscopes, catheters and insertion devices for medical examination or treatment of internal body structures are described in the following U.S. patents, the disclosures of which are hereby incorporated by reference in their entirety: U.S. Pat. Nos. 4,543,090; 4,753,223; 5,337,732; 5,337,733; 5,383,852; 5,487,757; 5,624,381; 5,662,587; and 5,759,151.

SUMMARY OF THE INVENTION

[0007] Accordingly, an improved endoscopic apparatus is disclosed herein for the examination of a patient's colon, other internal bodily cavities, and any other spaces within the body with minimal impingement upon bodily cavities or upon the walls of the organs. The disclosed apparatus may also be employed for various surgical treatments of those regions, e.g., insufflation, drug delivery, biopsies, etc. A steerable endoscope having an elongate body with a manually or selectively steerable distal portion, an automatically controlled portion, which may be optionally omitted from the device, a flexible and passively manipulated proximal portion, and an externally controlled and manipulatable tracking rod or guide is described below. The tracking rod or guide may be slidably positioned within a guide channel or lumen within the endoscope or it may be externally positionable such that the guide and the endoscope may slide relative to one another along a rail or channel located along an external surface of the endoscope.

[0008] In operation, the steerable distal portion of the endoscope may be first advanced into a patient's rectum via the anus. The endoscope may be simply advanced, either manually or automatically by a motor, until the first curvature is reached. At this point, the steerable distal portion may be actively controlled by the physician or surgeon to attain an optimal curvature or shape for advancement of the endoscope. The optimal curvature or shape is considered to be the path which presents the least amount of contact or interference from the walls of the colon. In one variation, once the desired curvature has been determined, the endoscope may be advanced further into the colon such that the automatically controlled segments of controllable portion follow the distal portion while transmitting the optimal curvature or shape proximally down the remaining segments of the controllable portion. The operation of the controllable segments will be described in further detail below.

[0009] In one variation, the guide is shorter than the full length of the endoscope, e.g., approximately the length of the controllable portion, and this shortened guide can be preloaded through the proximal end of the endoscope or through the handle of the endoscope. Once the guide is inserted, it may be advanced distally through the endoscope to the distal tip of the endoscope. As the user advances the endoscope distally, the automatically controlled segments of the proximal controllable portion propagate the selected curves down the endoscope, and the guide, in its flexible state, passively conforms to the shape of the desired pathway. Once the endoscope has advanced to a desired position, e.g. to a depth less than the length of the controllable portion of the endoscope, the user can rigidize the guide and maintain it at that depth (or axial position). The endoscope can then be further advanced relative to the rigidized guide,

sliding over the rigid guide and along the selected pathway. Thus, the surgeon or physician only needs to lock the guide in position once. If the controllable region of the endoscope and the guide are each at least half of the length of the endoscope, the entire endoscope can conform to a selected pathway in this manner. It is also possible to reposition the guide easily by relaxing and/or unlocking it from its rigidized axial position and then moving the guide into its new position.

[0010] In an alternative variation, once the steerable distal portion has been steered or positioned for advancement, the guide may be advanced distally in its flexible state along or within the endoscope until it reaches a distal position, i.e., preferably some point distal of the flexible proximal portion. Regardless whether the optional controllable portion is omitted or not from the device, the guide may be advanced near or to the end of the distal portion. Once the guide has been advanced, it may directly attain and conform to the curvature or shape defined by the steerable distal portion.

[0011] Preferably, the guide is advanced to the distal end of steerable distal portion or, if the controllable portion is included in the device, the guide may be advanced to the distal end of the controllable portion, or to some point between the two portions. The guide may be advanced to any distal position as long as a portion of guide attains and conforms to the optimal curvature or shape. Prior to advancing the endoscope over the guide, the guide may be left in its flexible state or it may be optionally rigidized, as discussed further below. If left in its flexible state, the guide may possibly provide desirable column strength to the endoscope as it is advanced through the colon over the guide. It is preferable, however, that the guide is rigidized once it has attained and conformed to the curvature. This allows the flexible proximal portion, i.e., the passive portion, to remain flexible and lightweight in structure. As the position of the guide is preferably rigidized and maintained, the endoscope may then be advanced over the guide in a monorail or "piggy-back" fashion so that the flexible proximal portion follows the curve held by the guide until the endoscope reaches the next point of curvature.

[0012] In some variations, the process of alternately advancing the guide and the endoscope may be repeated to advance the entire endoscope through the colon while the guide may be alternatively rigidized and relaxed while being advanced distally. While the endoscope is advanced through the colon, the physician or surgeon may stop the advancement to examine various areas along the colon wall using, e.g., an imaging bundle located at the distal end of the endoscope. During such examinations, the guide may be temporarily withdrawn from the endoscope to allow for the insertion of other tools through the guide channel if there is no separate channel defined within the endoscope for the guide. The guide may also be withdrawn through the instrument to any location within the body of the endoscope. In other words, the guide may be withdrawn partially or removed entirely from the endoscope at any time, if desired, because there are no constraints which may limit the travel of the guide through the body of the endoscope. After a procedure has been completed on the colon wall, the tool may be withdrawn from the guide channel and the guide may be reintroduced into the endoscope so that the endoscope may optionally be advanced once again into the colon.

[0013] A further variation on advancing the endoscope may use multiple guides which are alternately rigidized while being advanced distally along a path. Although multiple guides may be used, two guides are preferably utilized. As the endoscopic device approaches a curvature, a first guide may be advanced in a relaxed and flexible state towards the steerable distal end of the device. While being advanced, the first guide preferably conforms to the shape defined by the distal end and the first guide may be subsequently rigidized to maintain this shape. The device may then be advanced further distally along the pathway while riding over the rigidized first guide.

[0014] After the device has been advanced to its new position, a second guide may also be advanced distally in its relaxed state through the device up to the distal end while the first guide is maintained in its rigidized state. The second guide may then conform to the new shape defined by the distal end of the device and become rigidized to maintain this new shape. At this point, the first guide is also preferably maintained in its rigid state until the distal end of the device has been advanced further distally. The first guide may then be relaxed and advanced while the rigidity of the second guide provides the strength for advancing the guide. This procedure may be repeated as necessary for negotiating the pathway.

[0015] To withdraw the endoscope from within the colon, the procedure above may be reversed such that the withdrawal minimally contacts the walls of the colon. Alternatively, the guide may simply be removed from the endoscope while leaving the endoscope within the colon. Alternatively, the guide may be left inside the endoscope in the relaxed mode. The endoscope may then be simply withdrawn by pulling the proximal portion to remove the device. This method may rub or contact the endoscope upon the walls of the colon, but any impingement would be minimal.

[0016] The selectively steerable distal portion can be selectively steered or bent up to a full 180° bend in any direction. A fiberoptic imaging bundle and one or more illumination fibers may extend through the body from the proximal portion to the distal portion. The illumination fibers are preferably in communication with a light source, i.e., conventional light sources, which may be positioned at some external location, or other sources such as LEDs. Alternatively, the endoscope may be configured as a video endoscope with a miniaturized video camera, such as a CCD camera, positioned at the distal portion of the endoscope body. The video camera may be used in combination with the illumination fibers. Optionally, the body of the endoscope may also include one or two access lumens that may optionally be used for insufflation or irrigation, air and water channels, and vacuum channels, etc. Generally, the body of the endoscope is highly flexible so that it is able to bend around small diameter curves without buckling or kinking while maintaining the various channels intact. The endoscope can be made in a variety of other sizes and configurations for other medical and industrial applications.

[0017] In some variations the endoscope may optionally include a suction device that can withdraw air or other gases, e.g. gases used for insufflating the interior of a colon. In the example of insufflating a colon, the insufflated gas may be trapped within regions of the colon due to the sacculation and movement of the colon walls. To facilitate removal of

these gases, the suction device may be utilized to withdraw these trapped gases as the endoscope is advanced or withdrawn through the colon.

[0018] The suction device may comprise a suction tube positioned within the endoscope and connected to a suction port defined along the endoscope outer surface at a location proximal of the distal tip. The suction port can apply suction at some distance from the tip of the endoscope so that the suction does not interfere with insufflation or other activities at the distal end of the endoscope. In one variation, the suction port is located in the distal half of the endoscope, approximately one-quarter down the length of the insertable portion of the endoscope, e.g., 40 to 50 cm from the steerable tip. Some variations may apply suction continuously, while others allow the user to selectively control application of the suction.

[0019] The optional controllable portion is composed of at least one segment and preferably several segments which may be controllable via a computer and/or controller located at a distance from the endoscope. In one variation, approximately half of the length of the endoscope is comprised of controllable segments. Each of the segments preferably have an actuator mechanically connecting adjacent segments to allow for the controlled motion of the segments in space. The actuators driving the segments may include a variety of different types of mechanisms, e.g., pneumatic, vacuum, hydraulic, electromechanical motors, drive shafts, etc. If a mechanism such as a flexible drive shaft were utilized, the power for actuating the segments would preferably be developed by a generator located at a distance from the segments, i.e., outside of a patient during use, and in electrical and mechanical communication with the drive shaft. Alternatively, segments could be actuated by push-pull wires or tendons, e.g. Bowden cables, that bend segments by distributing force across a segment, as described in "Tendon-Driven Endoscope and Methods of Insertion" filed Aug. 27, 2002 (attorney docket number 514812000125), which is incorporated in its entirety by reference.

[0020] A proximal portion comprises the rest of the endoscope and preferably a majority of the overall length of the device. The proximal portion is preferably a flexible tubing member that may conform to an infinite variety of shapes. It may also be covered by a polymeric covering optionally extendable over the controllable portion and the steerable distal portion as well to provide a smooth transition between the controllable segments and the flexible tubing of the proximal portion. The controllable portion may be optionally omitted from the endoscope. A more detailed description on the construction and operation of the segments may be found in U.S. patent application Ser. No. 09/969,927 entitled "Steerable Segmented Endoscope and Method of Insertion" filed Oct. 2, 2001, which has been incorporated by reference in its entirety.

[0021] A proximal handle may be attached to the proximal end of the proximal portion and may include imaging devices connected to the fiberoptic imaging bundle for direct viewing and/or for connection to a video camera or a recording device. The handle may be connected to other devices, e.g., illumination sources and one or several luer lock fittings for connection to various instrument channels. The handle may also be connected to a steering control mechanism for controlling the steerable distal portion. The handle may optionally have the steering control mechanism integrated directly into the handle, e.g., in the form of a joystick, conventional disk controller using dials or wheels, etc. An axial motion transducer may also be provided for measuring the axial motion, i.e., the depth change, of the endoscope body as it is advanced and withdrawn. The axial motion transducer can be made in many possible configurations. As the body of the endoscope slides through the transducer, it may produce a signal indicative of the axial position of the endoscope body with respect to the fixed point of reference. The transducer may use various methods for measuring the axial position of the endoscope body.

[0022] The guide is generally used to impart a desired curvature initially defined by the steerable portion and/or by the optional controllable portion to the passive proximal portion when the endoscope is advanced. If held or advanced into the steerable portion, the guide is preferably advanced to or near the distal tip of the portion. It is also used to impart some column strength to the proximal portion in order to maintain its shape and to prevent any buckling when axially loaded. Preferably, the guide is slidably disposed within the length of the endoscope body and may freely slide entirely through the passive proximal portion, through the controllable portion, and the steerable distal portion. The extent to which the guide may traverse through the endoscope body may be varied and adjusted according to the application, as described above. Furthermore, the proximal end of the guide may be routed through a separate channel to a guide controller which may be used to control the advancement and/or withdrawal of the guide and which may also be used to selectively control the rigidity of the guide as controlled by the physician.

[0023] The structure of the guide may be varied according to the desired application. The following descriptions of the guide are presented as possible variations and are not intended to be limiting in their structure. For instance, the guide may be comprised of two coaxially positioned tubes separated by a gap. Once the guide has been placed and has assumed the desirable shape or curve, a vacuum force may be applied to draw out the air within the gap, thereby radially deforming one or both tubes such that they come into contact with one another and lock their relative positions.

[0024] Another variation on the guide is one which is rigidizable by a tensioning member. Such a guide may be comprised of a series of individual segments which are rotatably interlocked with one another in series. Each segment may further define a common channel through which a tensioning member may be positioned while being held between a proximal and a distal segment. During use, the tensioning member may be slackened or loosened enough such that the guide becomes flexible enough to assume a shape or curve defined by the endoscope. When the guide is desirably situated and has assumed a desired shape, the tensioning member may then be tensioned, thereby drawing each segment tightly against one another to hold the desired shape.

[0025] Another variation may use a guide which is comprised of interlocking ball-and-socket type joints which are gasketed at their interfaces. Such a design may utilize a vacuum pump to selectively tighten and relax the individual segments against one another. Other variations may include alternating cupped segments and ball segments, a series of

collinear sleeve-hemisphere segments, as well as other designs which may interfit with one another in series. Such a guide may be tightened and relaxed either by tensioning members or vacuum forces.

[0026] A further variation on the guide is a coaxially aligned stiffening member. This assembly may include a first subassembly comprising a number of collinearly nested segments which may be held by a tensioning member passing through each segment. The first subassembly may be rigidized from a flexible or flaccid state by pulling on this tensioning member. A second subassembly may comprise a number of annular segments also collinearly held relative to one another with one or more tensioning members passing through each annular segment. The second subassembly preferably defines a central area in which the first nested subassembly may be situated coaxially within the second subassembly. The first subassembly is preferably slidably disposed relative to the second subassembly thereby allowing each subassembly to be alternately advanced in a flexible state and alternately rigidized to allow the other subassembly to be advanced. This design presents a small cross-section relative to the endoscope or device through which it may be advanced.

BRIEF DESCRIPTION OF THE DRAWINGS

[0027] **FIG. 1** shows a representation of a conventional endoscope in use.

[0028] **FIG. 2A** shows a variation of an endoscopic device of the present invention.

[0029] **FIGS. 2B and 2C** show side sectional views of another variation of the present invention.

[0030] **FIG. 3A** shows a side view of an endoscopic device variation with the outer layers removed to reveal a guiding apparatus disposed within.

[0031] **FIGS. 3B and 3C** show cross-sectional views of various examples for obstructing the guide lumen of the endoscope.

[0032] **FIGS. 4A** to **4C** show cross-sectional views of various examples of guiding apparatus which may be used to guide an endoscope.

[0033] **FIGS. 5A and 5B** show the cross-sectioned end and side views, respectively, of a guiding apparatus with a vacuum-actuated rigidizing variation.

[0034] **FIGS. 6A and 6B** show the cross-sectioned end and side views, respectively, of a guiding apparatus with a tensioning or pre-tensioned element for rigidizing the guide.

[0035] **FIGS. 7A and 7B** show the cross-sectioned end and side views, respectively, of a guiding apparatus with a segmented vacuum-actuated rigidizing variation.

[0036] **FIGS. 8A and 8B** show the cross-sectioned end and side views, respectively, of a guiding apparatus with interconnecting jointed segments for rigidizing the guide.

[0037] **FIGS. 9A** to **9C** show end, side, and cross-sectioned views, respectively, of another variation on the guiding apparatus.

[0038] **FIG. 10** shows the cross-sectioned side view of another variation on the guiding apparatus having alternating bead and sleeve segments.

[0039] **FIG. 11A** shows a side view of a nested guiding apparatus which is part of a coaxial stiffening assembly.

[0040] **FIG. 11B** shows a side view of an annular guiding apparatus which is also part of the coaxial stiffening assembly.

[0041] **FIG. 11C** shows the combination of the guides from **FIGS. 11A and 11B**.

[0042] **FIGS. 12A and 12B** illustrate a representative example of advancing the endoscope along a tortuous pathway using a single rigidizing step.

[0043] **FIGS. 13A** to **13H** illustrate a representative example of advancing an endoscope through a patient's colon using a guiding apparatus to assist in advancing the endoscope.

[0044] **FIGS. 14A and 14B** show a variation on the withdrawal of the endoscope with or without the guiding apparatus for the selective treatment of sites along the patient's colon.

[0045] **FIGS. 15A** to **15C** illustrate a representative example of advancing an endoscope through a tortuous path using the coaxial guiding apparatus shown in **FIGS. 11A** to **11C**.

[0046] **FIGS. 16A** to **16E** illustrate another variation of advancing an endoscope through a tortuous path using multiple guiding apparatuses.

DETAILED DESCRIPTION OF THE INVENTION

[0047] **FIG. 1** shows a prior art colonoscope **10** being employed for a colonoscopic examination of a patient's colon C. The colonoscope **10** has a proximal handle **16** and an elongate body **12** with a steerable distal portion **14**. The body **12** of the colonoscope **10** has been lubricated and inserted into the colon C via the patient's anus A. Utilizing the steerable distal portion **14** for guidance, the body **12** of the colonoscope **10** has been maneuvered through several turns in the patient's colon C to the ascending colon G. Typically, this involves a considerable amount of manipulation by pushing, pulling and rotating the colonoscope **10** from the proximal end to advance it through the turns of the colon C. After the steerable distal portion **14** has passed, the wall of the colon C maintains the curve in the flexible body **12** of the colonoscope **10** as it is advanced. Friction develops along the body **12** of the colonoscope **10** as it is inserted, particularly at each turn in the colon C. Because of the friction, when the user attempts to advance the colonoscope **10**, the body **12'** tends to move outward at each curve, pushing against the wall of the colon C, which exacerbates the problem by increasing the friction and making it more difficult to advance the colonoscope **10**. On the other hand, when the colonoscope **10** is withdrawn, the body **12"** tends to move inward at each curve taking up the slack that developed when the colonoscope **10** was advanced. When the patient's colon C is extremely tortuous, the distal end of the body **12** becomes unresponsive to the user's manipulations, and eventually it may become impossible to advance the colonoscope **10** any farther. In addition to the difficulty that it presents to the user, tortuosity of the patient's colon also increases the risk of complications, such as intestinal perforation.

[0048] **FIG. 2A** shows a variation of the steerable endoscope **20** of the present invention. The endoscope **20** has an elongate body **21** with a manually or selectively steerable distal portion **24**, an automatically controlled portion **28**, which may be optionally omitted from the device, a flexible and passively manipulated proximal portion **22**, and an externally controlled and manipulatable tracking rod or guide **36** which may be slidably positioned within the endoscope **20**.

[0049] The selectively steerable distal portion **24** can be selectively steered or bent up to a full 180° bend in any direction **26**, as shown in the figure. A fiberoptic imaging bundle **40** and one or more illumination fibers **42** may extend through the body **21** from the proximal portion **22** to the distal portion **24**. Alternatively, the endoscope **20** may be configured as a video endoscope with a miniaturized video camera, such as a CCD camera, positioned at the distal portion **24** of the endoscope body **21**. The images from the video camera can be transmitted to a video monitor by a transmission cable or by wireless transmission where images may be viewed in real-time or recorded by a recording device onto analog recording medium, e.g., magnetic tape, or digital recording medium, e.g., compact disc, digital tape, etc. Optionally, the body **21** of the endoscope **20** may include one or two access lumens **38** that may optionally be used for illumination fibers for providing a light source, insufflation or irrigation, air and water channels, and vacuum channels. Generally, the body **21** of the endoscope **20** is highly flexible so that it is able to bend around small diameter curves without buckling or kinking while maintaining the various channels intact. When configured for use as a colonoscope, the body **21** of the endoscope **20** may range typically from 135 to 185 cm in length and about 13-21 mm in diameter. The endoscope **20** can be made in a variety of other sizes and configurations for other medical and industrial applications.

[0050] The optional controllable portion **28** is composed of at least one segment **30**, and preferably several segments **30**, which may be controllable via a computer and/or controller located at a distance from the endoscope **20**. Each of the segments **30** preferably has an actuator mechanically connecting adjacent segments **30** to allow for the controlled motion of the segments **30** in space. The actuators driving the segments **30** may include a variety of different types of mechanisms, e.g., pneumatic, hydraulic, electromechanical motors, "off board" powered drive shafts, tendons, etc. A proximal portion **22** comprises the rest of the endoscope **20** and preferably a majority of the overall length of the device **20**. Proximal portion **20** is preferably a flexible tubing member which may conform to an infinite variety of shapes. It may also be covered by a polymeric covering **39** optionally extendable over controllable portion **28** and steerable distal portion **24** as well to provide a smooth transition between the controllable segments **30** and the flexible tubing of proximal portion **22**. The proximal portion **22** may be made from a variety of materials such as thermoset and thermoplastic polymers which are used for fabricating the tubing of conventional endoscopes.

[0051] A proximal handle **32** may be attached to the proximal end of the proximal portion **22**. The handle **32** may include an ocular **33** connected to the fiberoptic imaging bundle **42** for direct viewing. The handle **32** may otherwise have a connector for connection to a video camera, e.g., a CCD camera, or a recording device. The handle **32** may be connected to an illumination source **43** by an illumination cable **44** that is connected to or continuous with the illumination fibers **42**. One or several luer lock fittings **34** may be located on the handle **32** and connected to the various instrument channels.

[0052] The handle **32** is connected to an electronic motion controller **45** by way of a controller cable **46**. A steering control **47** may be connected to the electronic motion controller **45** by way of a second cable **48** or it may optionally be connected directly to the handle **32**. Alternatively, the handle may have the steering control mechanism integrated directly into the handle, e.g., in the form of a joystick, conventional disk controllers such as dials or wheels, etc. The steering control **47** allows the user to selectively steer or bend the selectively steerable distal portion **26** of the body **21** in the desired direction. The steering control **47** may be a joystick controller as shown, or other known steering control mechanism. The electronic motion controller **45** controls the motion of the automatically controlled proximal portion **28** of the body **21**. The electronic motion controller **45** may be implemented using a motion control program running on a microcomputer or using an application-specific motion controller. Alternatively, the electronic motion controller **45** may be implemented using, e.g., a neural network controller.

[0053] An axial motion transducer **49** may be provided for measuring the axial motion, i.e., the depth change, of the endoscope body **21** as it is advanced and withdrawn. The axial motion transducer **49** can be made in many possible configurations. For example, the axial motion transducer **49** in **FIG. 2A** is configured as a ring **49** that may surround the body **21** of the endoscope **20**. The axial motion transducer **49** is preferably attached to a fixed point of reference, such as the surgical table or the insertion point for the endoscope **20** on the patient's body. As the body **21** of the endoscope **20** slides through the axial motion transducer **49**, it produces a signal indicative of the axial position of the endoscope body **21** with respect to the fixed point of reference and sends a signal to the electronic motion controller **45** by telemetry or by a cable. The axial motion transducer **49** may use optical, electronic or mechanical methods to measure the axial position of the endoscope body **21**.

[0054] Similarly, when the endoscope body **21** is withdrawn proximally, each time the endoscope body **21** is moved proximally by one unit, each section in the automatically controlled proximal portion **28** is signaled to assume the shape of the section that previously occupied the space that it is now in. The curve propagates distally along the length of the automatically controlled proximal portion **28** of the endoscope body **21**, and the shaped curve appears to be fixed in space, as the endoscope body **21** withdraws proximally. Alternatively, the segments of controlled portion **28** could be made to become flaccid and the withdrawal would then be passive.

[0055] Whenever the endoscope body **21** is advanced or withdrawn, the axial motion transducer **49** detects the change in position and the electronic motion controller **45** propagates the selected curves proximally or distally along the controllable portion **28** of the endoscope body **21** to maintain the curves in a spatially fixed position. The axial motion transducer **49** also allows for the incrementing of a

current depth within the colon C by the measured change in depth. This allows the endoscope body **21** to be guided through tortuous curves without putting unnecessary force on the wall of the colon C. As mentioned above, such a segmented body **30** within the controllable portion **28** may be actuated by a variety of methods. One method involves the use of electromechanical motors which may be individually mounted on each segment **30** to move the segments **30** relative to one another. Each segment **30** preferably defines at least one lumen running through it to provide an access channel through which wires, optical fibers, air and/or water channels, various endoscopic tools, or any variety of devices and wires may be routed through.

[**0056**] A more detailed description on the construction and operation of the segments may be found in U.S. patent application Ser. No. 09/969,927 entitled "Steerable Segmented Endoscope and Method of Insertion" filed Oct. 2, 2001, which has been incorporated by reference in its entirety.

[**0057**] The guide **36** is generally used to impart a desired curvature initially defined by the steerable distal portion **24** and/or by the optional controllable portion **28** to the passive proximal portion **22** when the endoscope **20** is advanced. If the guide **36** is advanced into the steerable distal portion **24**, guide **36** is preferably advanced to or near the distal tip of the portion **24**. The guide **36** may also be used partly to impart some column strength to the proximal portion **22** in order to maintain its shape and to prevent any buckling when axially loaded, such as when the endoscope **20** is advanced through a patient's colon. Construction of an endoscope **20** with the use of the guide **36** not only simplifies the control systems involved but it also represents a cost efficient device. Operation of the endoscope **20** with guide **36** will be discussed in detail below.

[**0058**] Preferably, the guide **36** is slidably disposed within the length of the endoscope body **21** and may freely slide entirely through the passive proximal portion **22**, through the optional controllable portion **28**, if utilized in the endoscope, and the steerable distal portion **24**. Guide **36** may also be withdrawn through the instrument to any location within the body of endoscope **20**. Moreover, guide **36** may be removed entirely from endoscope **20**, if desired e.g., to accommodate additional working tools. In other words, there are preferably no constraints which may limit the travel of guide **36** within the body of endoscope **20**.

[**0059**] Guide **36** may be advanced through proximal handle **32**; alternatively, guide **36** may also be routed through a separate channel **37** dedicated to the guide **36**. Channel **37** is preferably attached to endoscope **20** near a proximal end of the instrument, such as a location off the proximal portion **22**, and leads to a guide controller **41** which may be used to advance and/or withdraw guide **36** through endoscope **20**. Guide controller **41** may also be used to selectively rigidize and relax guide **36** during use within a patient. Having guide controller **41** and proximal handle **32** separated may allow for the ease of use for the physician manipulating the endoscope **20**. To aid in advancing guide **36** through endoscope **20**, a pulley mechanism may be affixed within the steerable distal portion **24** through which a pull wire may extend over to connect the distal end of the guide **36** to a location outside the endoscope **20** for manipulation by the physician.

[**0060**] To facilitate the movement of guide **36** through endoscope body **21**, a lubricious covering or coating may be applied over at least a majority of the length of guide **36** or onto the inner surface of the lumen through which guide **36** traverse, or both. Such coverings may include various polymers and plastics, e.g., PTFE, etc., which may simply cover the guide **36** length or which may be heatshrunk, coated, or bonded onto guide **36**, depending upon the material used. The extent to which guide **36** traverses through the endoscope body **21** may be varied and adjusted according to the application.

[**0061**] **FIGS. 2B and 2C** show sectional partial views of a variation of the endoscope that is capable of single-step use of the guide. In these variations, the axial length of the guide **51** is shorter than the insertable length of the endoscope **23**. The endoscope body **21** includes a steerable distal tip **24** and a proximal controllable region **28** that is comprised of flexible segments **30**. Approximately half of the length of the endoscope body may be composed of controllable segments **30**, and the remaining proximal part of the endoscope is flexible passive portion **22**. The length of the guide **51** is approximately half that of the endoscope body **23**. Although the guide **51** is freely slidable within lumen **50** of the endoscope **23** in the variation shown, the guide **51** may be preloaded through the distal end of the endoscope **23** before insertion into the body. Alternatively, the guide **51** could be positioned as described above. The guide **51** can be rigidized and held in place by the tensioning wire **36**. The combination of steerable distal tip **24**, controllable proximal portion **28** and guide **51** in this variation of the invention simplifies the use of the rigidizable guide **51** because the guide **51** only has to be rigidized and locked into position once.

[**0062**] **FIG. 2C** shows another, slightly magnified, sectional view of the endoscope of **FIG. 2B**. This view illustrates an optional suction device **53**, e.g., a negative pressure pump device, which may be fluidly connected to suction port **202** through suction tube **204**. Suction device **53** is preferably located externally of the patient during use. Because insufflated air or gas may be trapped within regions of the colon due to the sacculation and movement of the colon walls, the suction device **53** may be used to facilitate removal of these gases as the endoscope is advanced or withdrawn through the colon. The suction port **202** shown is preferably located at some point proximal of distal end **24**, e.g., approximately one quarter of the length of the endoscope body **23**. This suction port can be located virtually anywhere along the length of the endoscope, but it is preferably located such that it does not interfere with the insufflation process at or near the distal tip.

[**0063**] **FIG. 3A** shows an isometric view of a length of the endoscope **20**, in this example part of the proximal portion **22**, with a section of the endoscope body **20** removed for clarity. As seen, a representative illustration of the guide **36** may be seen disposed within guide channel or lumen **50** within the proximal portion **22**. Lumen **50** may be an existing working channel, i.e., an access channel for other tools, or it may be a designated channel for guide **36** depending upon the desired application. Guide **36** may be inserted within guide channel **50** through the endoscope handle **32** and pushed proximally through the remainder of the device, as seen in **FIG. 2A**; or preferably, it may be pushed proximally or pulled distally, as necessary, through a separate guide controller **41**, as discussed above. Although

guide **36** is shown in this variation as being slidably disposed interiorly of endoscope body **20**, it may also be disposed exteriorly of the body **20** to slide along a guide rail or exterior channel in other variations.

[**0064**] If guide **36** is located within a dedicated channel, such as lumen **50**, the distal end of this channel is preferably closed or blocked at some distal location, e.g., within steerable distal portion **24** or within optional controllable portion **28**, to prevent the influx of bodily fluids within lumen **50**. Because an enclosed lumen **50** would further prevent contact of bodily fluids with guide **36**, the amount of cleaning or sterilization of guide **36** is reduced.

[**0065**] If lumen **50** were left as an open channel, additional sterilization or cleaning and disinfecting of guide **36** and lumen **50** may be necessary. Alternatively, lumen **50** may be left as an open channel but configured to have optional closing mechanisms, as shown in the examples of **FIGS. 3B and 3C**, taken from **FIG. 3A**. **FIG. 3B** shows an end view of a trap or door **54** which is held within the body of the instrument and which may be rotated about a pivot **56** in the direction of the arrow to close access to lumen **50**. Trap **54** may be closed during insertion of the instrument within a patient and then optionally opened to allow for working tools to be inserted therethrough. **FIG. 3C** shows another example where lumen **50** may be obstructed by an inflatable balloon **59** which may selectively expand to completely obstruct the passageway. Balloon **59** may be made of conventional materials and may be held within a compartment or step **58** such that lumen **50** is unobstructed when balloon **59** is deflated. These examples merely present variations and are not meant to limit the scope of the invention. Alternative designs and variations are intended to be within the scope of the present invention.

[**0066**] **FIGS. 4A** to **4C** show variations on possible cross-sections **4A-4A**, **4B-4B**, and **4C-4C**, respectively, taken from **FIG. 3A**. **FIG. 4A** shows a simplified cross-section **22'** of a guide **36** having a circular diameter slidably disposed within proximal portion **22**. As seen, guide **36** may be slidably positioned within channel **50'**, which may also be used as a working channel upon removal of guide **36** during, e.g., a colonoscopy procedure, for providing access for various instruments or tools to a treatment site. **FIG. 4B** shows another possible variation in cross-section **22"** where guide **36** is positioned within channel **50"**. The variation of the proximal portion in cross-section **22"** may include a number of access lumens **52** optionally formed within the body of the device **20**. These lumens **52** may run through the length of device **20** and may be used for various applications, e.g., illumination fibers, laparoscopic tools, etc. Although three lumens **52** are shown in the figure, any number of channels as practically possible may be utilized depending upon the application at hand. **FIG. 4C** shows another variation in cross-section **22'"**. In this variation, guide **36'** may be formed into a semi-circular or elliptical shape to slide within a similarly shaped channel **50'"**. In this example, proximal portion **22'"** also includes a working channel **52'** which may be shaped accordingly to fit within the body **22'"** along with channel **50'"** to maintain a working channel without having to remove guide **36'**. In any of the above examples, the working or guide channels are preferably integral structures within the body of endoscope **20**. Having an integral structure eliminates the need for a separate lumened structure, e.g., a separate sheath, through which guide **36** or any other tools may be inserted. Another variation utilizing multiple channels and multiple guides will be described in further detail below. These variations are not intended to be limiting but are merely presented as possible variations. Other structures and variations thereof may be recognized by one of skill in the art and are intended to be within the scope of the claims below.

[**0067**] The structure of the guide may be varied according to the desired application. The following description on the guide is presented as possible variations and are not intended to be limiting in their structure. **FIGS. 5A and 5B** show cross-sectioned end and side views, respectively, of a guiding apparatus variation which is rigidizable by a vacuum force applied within the guide. It is preferable that the guide is selectively rigidizable, i.e., when the guide assumes a shape or curve in a flexible state, the guide may be rigidized to hold that shape or curve for a predetermined period of time. Although the endoscope structure of the present invention may utilize a guide which remains in a relatively flexible shape, it is preferable to have the guide be selectively rigidizable.

[**0068**] Guide **60** may be comprised of two coaxially positioned tubes, outer tube **62** and inner tube **64**, which are separated by a gap **66** between the two tubes. Inner tube **64** may define an access lumen **68** throughout the length of the tube to provide a channel for additional tools or other access devices. Both tubes **62**, **64** are preferably flexible enough to be bent over a wide range of angles and may be made from a variety of materials such as polymers and plastics. They are also preferably flexible enough such that either the outer tube **62**, inner tube **64**, or both tubes are radially deformable. Once guide **60** has been placed and has assumed the desirable shape or curve, a vacuum force may be applied to draw out the air within gap **66**. This vacuum force may radially deform inner tube **64** and bring it into contact with the inner surface of outer tube **62** if inner tube **64** is made to be relatively more flexible than outer tube **62**. Alternatively, if outer tube **62** is made to be relatively more flexible than inner tube **64**, outer tube **62** may be brought into contact with the outer surface of inner tube **64**.

[**0069**] In another variation, tubes **62**, **64** may both be made to be flexible such that they are drawn towards one another. In yet another variation, which may be less preferable, a positive force of air pressure or a liquid, e.g., water or saline, may be pumped into access lumen **68**. The positive pressure from the gas or liquid may force the walls of inner tube **64** radially into contact with the inner surface of outer tube **62**. In any of these variations, contact between the two tubular surfaces will lock the tubes **62**, **64** together by frictional force and make them less flexible. An elastomeric outer covering **69**, or similar material, may optionally be placed upon the outer surface of outer tube **62** to provide a lubricious surface to facilitate the movement of guide **60** within the endoscopic device. An example of a device similar to guide **60** is discussed in further detail in U.S. Pat. No. 5,337,733, which has been incorporated herein by reference in its entirety.

[**0070**] Another variation on the guide is shown in **FIGS. 6A and 6B** which show cross-sectioned end and side views, respectively, of a guiding apparatus variation **70** which is rigidizable by a tensioning member **76**. Tensioned guide **70** is shown comprised of a series of individual segments **72**

which are rotatably interlocked with one another in series. Each segment **72** may contact an adjoining segment **72** along a contacting lip **78**. Each segment **72** may further define a channel therethrough which, collectively along with the other segments **72**, form a common channel **74** throughout a majority of the length of guide **70**. Segments **72** may be comprised of a variety of materials suitable for sustaining compression forces, e.g., stainless steel, thermoplastic polymers, plastics, etc.

[**0071**] Proximal and distal segments of guide **70** may hold respective ends of: tensioning member **76**, which is preferably disposed within common channel **74** through guide **70**. Tensioning member **76** may be connected to a tensioning housing located externally of a patient. During use when the guide is advanced distally through an endoscope of the present invention, tensioning member **76** is preferably slackened or loosened enough such that guide **70** is flexible enough to assume a shape or curve defined by the endoscope. When guide **70** is desirably situated and has assumed a desired shape, tensioning member **76** may be tensioned. This tightening or tensioning of member **76** will draw each segment **72** tightly against one another along each respective contacting lip **78** such that the guide **70** becomes rigid in assuming the desired shape. A lubricious covering, e.g., elastomers, etc., may be optionally placed over at least a majority of guide **70** to facilitate movement of the guide **70** relative to the endoscopic device. A similar concept and design is discussed in further detail in U.S. Pat. No. 5,624,381, which has been incorporated herein by reference in its entirety.

[**0072**] **FIGS. 7A and 7B** show cross-sectioned end and side views, respectively, of a guiding apparatus variation **80** which is rigidizable by a vacuum force which interlocks individual segments **82**. Each segment **82** may be adjoined with adjacent segments by interlocking ball-and-socket type joints which are preferably gasketed at the interfaces **86** of each connection. Within each segment **82**, with the exception of the distal segment, may be defined a channel which is narrowed at one end and flared at the opposite end. Collectively when the segments **82** are adjoined into the structure of guide **80**, each of the individual channels form a common channel **84** which extends through at least a majority of the segments **82** along the length of guide **80**. At the proximal end of guide **80** a vacuum pump, which is preferably located externally of the patient, is fluidly connected to common channel **84**. In use, once guide **80** is manipulated in its flexible state within the endoscope to assume the desired shape or curve, ambient pressure may exist within common channel **84**. When the rigid shape of guide **80** is desired, the pump may then be used to create a negative pressure within common channel **84** and this negative pressure draws each segment **82** into tight contact with one another to maintain the desired shape. When the vacuum force is released, each segment **82** would also be released and would thereby allow the guide **80** to be in its flexible state for advancement or withdrawal. Guide **80** may further be surrounded by an elastomeric or lubricious covering to aid in the advancement or withdrawal of the guide **80** within the endoscopic device.

[**0073**] **FIGS. 8A and 8B** show cross-sectioned end and side views, respectively, of yet another guiding apparatus variation **90** which is optionally rigidizable by either a vacuum force or a tensioning member which interlocks individual segments **92**. Segment **92** may be in the form of a segmented design with two opposed cups having a common channel **94** defined therethrough. Between each segment **92** are ball segments **96** which interfits along a contact rim or area **97** within each adjacent segment **92**. Ball segments **96** preferably contact adjacent cupped segments **96** within receiving channels **98** defined in each cup. When manipulated in its flexible state, guide **90** may be advanced or withdrawn or made to assume a desired shape or curve. When guide **90** is to be placed into its rigidized shape, a vacuum force or tensioning member **99** may be utilized in the guide **90** in similar manners as described above. Moreover, guide **90** may similarly be surrounded by an elastomeric or lubricious covering to aid in the advancement and withdrawal of the guide **90**.

[**0074**] **FIGS. 9A and 9B** show representative end and side views, respectively, of another guiding apparatus variation **100**. This variation **100** comprises individual segments **102** having a uniform sleeve section **104** in combination with an integrated curved or hemispherical section **106**. Each segment **102** is collinearly aligned with one another with the sleeve section **104** receiving the curved section **106** of an adjacent segment **102**, as shown in **FIG. 9C**, which is the cross-section of guide **100** from **FIG. 9B**. The adjacent segments **102** may rotate relative to one another over the sleeve-hemisphere interface while maintaining a common channel **108** through the guide **100**. A tensioning member **110** may pass through channel **108** along the length of guide **100** for compressing the individual segments **102** against one another when the entire guide **100** is rigidized.

[**0075**] **FIG. 10** shows the cross-section of another variation **120** of the rigidizable guide apparatus. Representative segments are shown comprising spherical bead segments **122** alternating with sleeve segments **124**. Each of the bead and sleeve segments **122**, **124**, respectively, may have a channel defined therethrough which allows for a tensioning member **126** to be run through the length of guide **120**. The alternating segments allow for the rotation of the adjacent segments while the tensioning member **126** allows for the compression of the segments against one another when the guide **120** is to be rigidized in much the same manner as described above.

[**0076**] An alternative variation on the rigidizable guide is illustrated in **FIGS. 11A** to **11C**, which show a stiffening assembly having separate rigidizable coaxially positioned guides. **FIG. 11A** shows a representative number of nested segments **132** in nested stiffening assembly **130**. Each nested segment **132** may be in a number of different configurations, e.g., ball socket joints, stacked ring-like segments, etc., with a tensioning member **134** passing through each of the segments **132**. For use with nested assembly **130**, an annular stiffening assembly **140** may be seen in **FIG. 11B**. Annular assembly **140**, of which only a few representative segments are shown, are comprised in this variation of annular segments **142** which may be stacked or aligned one atop each other. At least one tensioning member **144**, and preferably at least two, may be passed through each of the annular segments **142**. A central area **146** is defined in each annular segment **142** such that nested stiffening assembly **130** may be slidingly placed within the central area **146** defined by the annular stiffening assembly **140**. **FIG. 11C** shows the stiffening assembly **130** slidingly positioned within annular stiffening assembly **140** to form the coaxially aligned stiff-

ening assembly **150**. Use of coaxial assembly **150** will be described in further detail below.

[0077] **FIGS. 12A and 12B** illustrate a variation of the endoscope advancing through a tortuous path, using an endoscope similar to the variation of **FIG. 2B**. **FIG. 12A** shows a pathway with multiple turns **210**, resembling a length of the colon. The distal half of the device **212** comprises a steerable distal portion **24** and a controllable proximal portion **28**. The guide **51** is slidably held within a lumen within the endoscope in the relaxed state. As the device **212** is advanced into the pathway **210**, the user steers the distal tip **24**, and the controllable segments **30** follow the curve selected by the user, navigating the chosen pathway. While in the relaxed state, the guide **51** may passively assume the shape taken by the distal portion **24** and the controllable proximal portion **28** as they are steered along the path. Usually, the user may rigidize and/or "lock" the guide **51** to assume the curve of the selected pathway before the controllable proximal portion **28** has advanced beyond the first curve **220**. After being stiffened and locked into position, the endoscope can continue moving distally while still maintaining the selected pathway, since the passive flexible proximal region **22** of the endoscope slides over the rigid guide **51** and conforms to its shape, as shown in **FIG. 12B**.

[0078] After rigidizing the guide, the user can continue to steer the distal end **24** as it is advanced, and the curves of the selected pathway are propagated proximally down the controllable segments **30** as the endoscope moves forward. This variation of the device is capable of conforming to a selected pathway over the entire length of the endoscope, despite having a shorter guide **51** and controllable portion **28**, since the combined length of the guide **51** and the controllable portion is preferably equal to the length of the endoscope.

[0079] In operation, any of the guiding apparatus as described above or one recognized by a person of skill in the art to be suitable for such use as described herein may be utilized. **FIGS. 13A** to **13**H illustrate a representative method of advancing a colonscopic device **20** as described herein with a representative guide **36** for advancement into a patient's colon C. As seen in **FIG. 13A**, the steerable distal portion **24** of colonoscope **20** may be first advanced into the patient's rectum via anus A. The device **20** may be simply advanced, either manually or automatically by a motor, until the first curvature is reached or alternatively until the segments of controllable portion **28** are within colon C. At this point, the steerable distal portion **24** may be actively controlled by the physician or surgeon to attain an optimal curvature or shape for advancement of device **20**. The optimal curvature or shape is considered to be the path which presents the least amount of contact or interference from the walls of colon C. If the optional controllable portion **28** is used with the colonoscopic device **20**, once the advancement position **160** has been determined, the device **20** may be advanced further into the sigmoid colon S such that the automatically controlled segments of controllable portion **28** follow the distal portion **24** while transmitting the optimal curvature or shape proximally down the remaining segments of controllable portion **28**.

[0080] Alternatively, once steerable distal portion **24** has been steered or positioned for advancement **160**, guide **36** may be advanced distally in its flexible state along or within device **20** until it reaches a distal position, i.e., some point distal of the flexible proximal portion **22** and preferably to the distal end of the device **20**, as shown in **FIG. 13B**. Preferably, guide **36** is advanced to the distal end of steerable distal portion **24** or to the distal end of the optional controllable portion **28**, if utilized, or to some point therebetween. Guide **36** may be advanced to any distal position as long as a portion of guide **36** attains the optimal curvature or shape. Prior to advancing the device **20** over guide **36**, the guide **36** may be left in its flexible state or it may be optionally rigidized, as discussed above. If left in its flexible state, guide **36** will still provide desirable column strength to the device **20** as it is advanced through colon C over the guide **36**. It is preferable, however, that guide **36** is rigidized once it has attained and conformed to the curvature. As the position of guide **36** is preferably rigidized and maintained, the device **20** may then be advanced over the guide **20** in a monorail or "piggy-back" fashion so that the flexible proximal portion **22** follows the curve held by guide **36** until the device **20** reaches the next point of curvature. The following description discusses the use of the optional controllable portion **28**; however, this portion **28** may be omitted from the device **20**.

[0081] As shown from **FIGS. 13B** to **13**C, the curve is maintained by guide **36** until the steerable distal portion **24** has been advanced to the juncture between the sigmoid colon S and the descending colon D. At this point, the distal portion **24** may be actively steered by the physician using a variety of visualization techniques, e.g., steering via an optional imaging bundle **40** located at the distal end of the device **20**. Once the optimal curve or shape has been determined, the device **20** may be advanced to position **160**. As the device is moved distally, if the controllable portion **28** is utilized, portion **28** will automatically follow the path set by the distal portion while the flexible proximal portion follows the device **20** along the curvature defined by the guide **36**. Otherwise, if controllable portion **28** is omitted, guide **36** will have its curvature defined solely by steerable distal portion **24**. Once the junction between the sigmoid colon S and descending colon D has been traversed by the steerable distal portion **24** and the optional controllable portion **28**, the guide may then be relaxed and advanced distally along the device **20** in its flexible state until it reaches the distal position in the device **20**. As the guide **36** is advanced, it will attain and conform to a new curvature defined by the steerable distal portion **24** and/or the controllable portion **28**, as shown in **FIG. 13D**.

[0082] Having attained a new curvature, guide **36** may again be rigidized to maintain this shape. While the guide **36** maintains this shape, the device **20** may be advanced further distally along the descending colon D with the help of the rigidized guide **36** in the piggy-back manner described above to define the path for the flexible proximal portion **22** and to prevent excessive contact with the walls of colon C. As shown in **FIG. 13E**, the device **20** has been advanced past the left (splenic) flexure F_1 in the manner described above until the optional controllable portion **28** has attained the optimal curvature. The guide **36** may be relaxed again and advanced further distally in its flexible state, as shown from **FIGS. 13E** to **13**F.

[0083] After guide **36** has assumed the desired curvature defined by the distal portion **24** and/or controllable portion **28**, as shown in **FIG. 13F**, it may again be rigidized and the

device **20** may then be advanced through the transverse colon T and around the right (hepatic) flexure F_r in much the same manner as described above and as shown in **FIG. 13G**. Once the distal portion **24** and the optional controllable portion **28** has controllably negotiated past the right (hepatic) flexure F_r, the position of guide **20** may again be maintained while guide **36** is relaxed once again and advanced distally to assume the new curvature defined by distal portion **24** and/or controllable portion **28**, as shown in **FIG. 13H**. After guide **36** is optionally rigidized again, device **20** may be advanced **160** completely within the ascending colon G towards the cecum E for a complete examination of the colon C with minimal complication and effort.

[**0084**] While the device **20** is advanced through the colon C, the physician or surgeon may stop the advancement to examine various areas along the colon wall using, e.g., the imaging bundle **40**. During such examinations, the guide **36** may be temporarily withdrawn manually or automatically from the device **20** to allow for the insertion of other tools through the guide channel **50**. After a procedure has been completed on the colon wall, the tool may be withdrawn from guide channel **50** and guide **36** may be reintroduced into the device **20** so that the device may optionally be advanced once again into colon C.

[**0085**] To withdraw device **20** from within the colon C, the procedure above may be reversed, as shown in **FIG. 14A**, such that the withdrawal **162** minimally contacts the walls of colon C. Alternatively, guide **36** may simply be removed from device **20**, as shown in **FIG. 14B**, while leaving device **20** within colon C. The device **20** may simply be withdrawn by pulling the proximal portion **22** to remove the device **20**. This method may rub or contact the device **20** upon the walls of colon C, but any impingement would be minimal.

[**0086**] An alternative method of advancing an endoscope through a tortuous path may be seen in **FIGS. 15A** to **15**C by using the rigidizable guide assembly **150** seen from **FIG. 11C**. **FIG. 15A** shows a pathway to be negotiated by endoscopic device **172**. The pathway may represent a portion of colon **170**. As device **172** is desirably steered to assume a curve, nested stiffening assembly **130** may be advanced distally within device **172** to distal end **174** while in a relaxed state. Alternatively, nested assembly **130** may be advanced in the flexible, relaxed state along with the distal end **174**.

[**0087**] Once the curve has been selected, nested assembly **130** may be stiffened to maintain its shape. At this point, annular stiffening assembly **140** may be advanced over nested assembly **130** towards distal end **174**. Once assembly **140** has assumed the curve defined by assembly **130**, annular assembly **140** may then be rigidized and nested assembly **130** may be relaxed into its flexible state, as shown in **FIG. 15B**. Then the distal end **174** may be further advanced with or without assembly **130** while being pushed along the curve defined by rigidized annular assembly **140**, as shown in **FIG. 15C**. Once distal end **174** of device **172** has negotiated the curve, nested assembly **130**, after being advanced to distal end **174**, may then be rigidized again and annular assembly **140** may be relaxed and advanced again over assembly **130** and so on until the desired treatment location has been reached within the body.

[**0088**] Another alternative variation on advancing an endoscope through a tortuous path may be seen in **FIGS. 16A** to **16**E. This variation uses multiple guides which may be alternately rigidized while being advanced distally along the path. **FIG. 16A** shows a portion of the curved pathway in colon **170** with endoscope **180** being advanced therethrough. Multiple guides may be used in this variation, but preferably two guides are utilized, as described below. Any one of the rigidizable guide variations discussed herein may be used solely or in combination with different types of guides in the same device **180**. Each guide may be advanced within its own lumen defined within the endoscope, or they may also share a common dedicated lumen.

[**0089**] As device **180** approaches a curvature of colon **170**, first guide **184** may be advanced towards the steerable distal end **182**. While being advanced, first guide **184** is in a relaxed and flexible state allowing it to conform to the shape defined by the distal end **182**. Having been advanced to distal end **182**, as shown in **FIG. 16B**, first guide **184** is rigidized to maintain the shape defined by the steerable distal end **182**. Device **180** may then be advanced further distally into colon **170** while riding over rigidized first guide **184**.

[**0090**] After device **180** has been further advanced to a new position, second guide **186** may also be advanced distally in its relaxed state through device **180** up to the distal end **182** while first guide **184** is preferably still rigidized, as shown in **FIG. 16C**. As second guide **186** advances, it may conform to a new shape defined by device **180**. Second guide **186** may then be rigidized to hold its shape. First guide **184** may be relaxed but its rigid shape is preferably also maintained while the distal end **182** of device **180** is further advanced distally through colon **170**, as shown in **FIG. 16D**.

[**0091**] After device **180** has been advanced distally, first guide **184** may be relaxed and advanced through device **180** up to distal end **182** while the rigidity of second guide **186** is maintained, as shown in **FIG. 16E**. Second guide **186** may be relaxed and then advanced in its flexible state distally through device **180** and so on. This process may be repeated as device **180** is required to negotiate arbitrarily tortuous paths.

[**0092**] Although the endoscope of the present invention has been described for use as a colonoscope, the endoscope can be configured for a number of other medical and industrial applications. In addition, the present invention can also be configured as a catheter, cannula, surgical instrument or introducer sheath that uses the principles of the invention for navigating through tortuous body channels. The present invention may also be used for industrial applications such as inspection and exploratory applications within tortuous regions, e.g., machinery, pipes, etc.

[**0093**] In a variation of the method that is particularly applicable to laparoscopy or thoracoscopy procedures, the steerable endoscope can be selectively maneuvered along a desired path around and between organs in a patient's body cavity. The distal end of the endoscope may be inserted into the patient's body cavity through a natural opening, through a surgical incision or through a surgical cannula, introducer, or trocar. The selectively steerable distal portion can be used to explore and examine the patient's body cavity and to select a path around and between the patient's organs. The electronic motion controller in conjunction with the tracking rod can be used to control the automatically controlled

proximal portion to follow the selected path and allow the rest of the body to follow the tracking rod and, if necessary, to return to a desired location using the three-dimensional model in the electronic memory of the electronic motion controller. Modification of the above-described assemblies and methods for carrying out the invention, and variations of aspects of the invention that are obvious to those of skill in the art are intended to be within the scope of the claims.

1-34. (canceled)

35. A method of advancing an instrument along an arbitrary path, comprising:

selectively steering a distal portion of the instrument to assume a selected shape along an arbitrary path;

advancing an introducer sheath along the instrument such that a portion of the introducer sheath conforms to and assumes the selected shape; and

maintaining a position of the introducer sheath while advancing the instrument along the introducer sheath such that a proximal portion of the instrument assumes the selected shape defined by the introducer sheath, wherein the introducer sheath is freely slidable along the length of the instrument such that advancing of the instrument along the introducer sheath is unconstrained.

36. The method of claim 35 wherein prior to advancing the introducer sheath along the instrument, further comprising advancing the instrument distally while configuring a controllable portion of the instrument to assume the selected shape of the distal portion, wherein the controllable portion is proximal of the distal portion.

37. The method of claim 35 further comprising measuring a depth change of the instrument while advancing the instrument distally.

38. The method of claim 37 further comprising incrementing a current depth by the depth change.

39. The method of claim 35 further comprising releasing the position of the introducer sheath and further advancing the introducer sheath along the instrument.

40. The method of claim 35 further comprising withdrawing the introducer sheath from the instrument.

41. The method of claim 35 wherein the distal portion of the instrument and a distal portion of the introducer sheath are adjacent.

42. The method of claim 35 wherein the distal portion of the instrument selectively assumes a second shape when the instrument is advanced within the introducer sheath.

43. The method of claim 42 further comprising advancing at least one additional introducer sheath along the instrument such that the additional introducer sheath conforms to and assumes the second shape.

44. The method of claim 43 further comprising rigidizing the additional introducer sheath such that the second shape is maintained by the additional introducer sheath.

45. The method of claim 35 wherein maintaining the position of the introducer sheath comprises rigidizing the introducer sheath such that the introducer sheath rigidly assumes a position of the selected shape.

46. The method of claim 45 wherein rigidizing the introducer sheath comprises applying tension to a tensioning member disposed within the introducer sheath such that a plurality of adjacent segments comprising the introducer sheath are compressed.

47. The method of claim 45 wherein rigidizing the introducer sheath comprises applying a vacuum force within a lumen defined within the introducer sheath such that a plurality of adjacent segments comprising the introducer sheath are compressed.

48. An apparatus for insertion into a body cavity, comprising:

an elongate body having a proximal portion and a selectively steerable distal portion and defining a lumen therebetween, the steerable distal portion being configurable to assume a selected shape along an arbitrary path;

an introducer sheath having a proximal section, a distal section, and a length therebetween, the introducer sheath being slidably disposed without constraint along the length for selectively supporting the body, wherein the introducer sheath is configured to conform to and selectively maintain the selected shape assumed by the steerable distal portion, and

wherein the proximal portion of the elongate body when advanced distally is configured to conform to the selected curve maintained by the introducer sheath.

49. The apparatus of claim 48 further comprising a controllable portion located proximally of the distal portion, wherein the controllable portion is configured to propagate the selected shape along the controllable portion.

50. The apparatus of claim 48 wherein the selectively steerable distal portion is configurable via a control located externally of the body cavity.

51. The apparatus of claim 48 wherein the proximal portion comprises a flexible tubular member.

52. The apparatus of claim 49 wherein the controllable portion comprises a plurality of pivotally connected segments.

53. The apparatus of claim 52 wherein each of the segments comprises an actuator for propagating the selected shape along the controllable portion.

54. The apparatus of claim 53 wherein the actuator comprises a type of motor selected from the group consisting of pneumatic, hydraulic, electromechanical motors, and drive shafts.

55. The apparatus of claim 52 wherein the controllable portion comprises at least two pivotally connected segments.

56. The apparatus of claim 48 wherein the introducer sheath is configured to assume the selected shape when the introducer sheath is in a flexible state and wherein the introducer sheath is further configured to maintain the selected shape when the introducer sheath is in a rigidized state.

57. The apparatus of claim 56 wherein the introducer sheath is configured to selectively rigidize along the length of the introducer sheath to maintain the selected shape in the rigidized state.

58. The apparatus of claim 56 wherein the proximal section of the introducer sheath is in communication with an introducer sheath controller for selectively rigidizing the introducer sheath along its length.

59. The apparatus of claim 56 wherein the introducer sheath comprises a plurality of adjacent segments each defining a channel therethrough such that a common channel is defined through the length of the introducer sheath.

60. The apparatus of claim 59 further comprising a tensioning member disposed within the common channel such that applying a force to the tensioning member compresses the adjacent segments together.

61. The apparatus of claim 59 wherein the introducer sheath is configured to maintain a position of adjacent segments relative to each other upon applying a vacuum force within the common channel.

62. The apparatus of claim 48 further comprising an obstruction located within the lumen distally of the introducer sheath for preventing contamination of the introducer sheath.

63. The apparatus of claim 62 wherein the obstruction is selectively removable from a passageway of the lumen.

64. The apparatus of claim 63 wherein the obstruction comprises a trap or an expandable balloon.

65. The apparatus of claim 48 further comprising at least one additional introducer sheath having a proximal section, a distal section, and a length therebetween, the additional introducer sheath also being slidably disposed within the elongate body and being configured to conform to and selectively maintain an additional selected curve assumed by the steerable distal portion.

66. The apparatus of claim 48 further comprising a tubular covering disposed over at least a majority of the length of the elongate guide.

* * * * *