J. SACHS.

CLIP.

APPLICATION FILED JULY 27, 1915.

1,194,882. Patented Aug. 15, 1916.

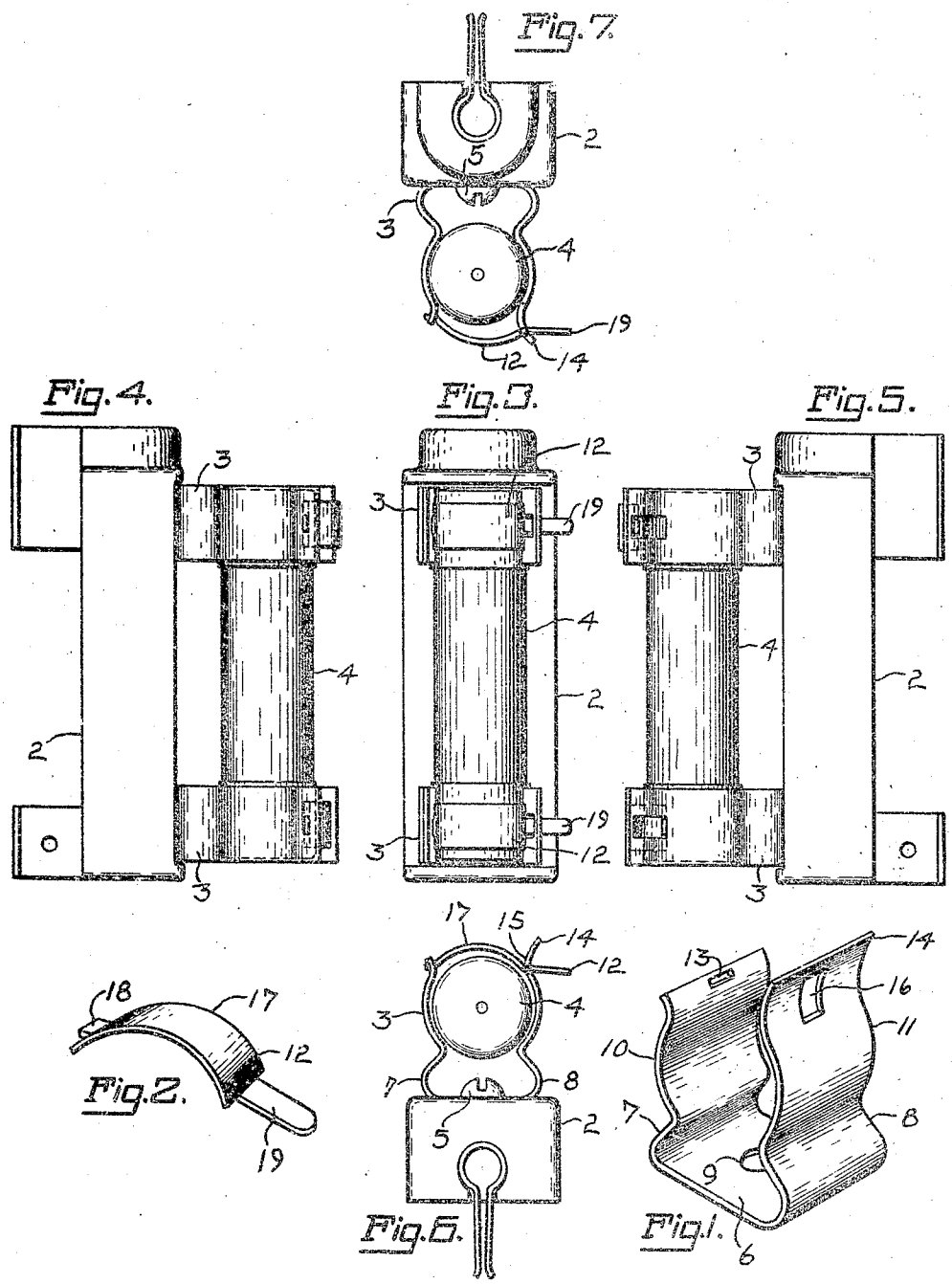

Witnesses
Otto Hilton.
L. L. Markel.

Inventor
Joseph Sachs.
By Hesse Sutherland
Attorney

UNITED STATES PATENT OFFICE.

JOSEPH SACHS, OF HARTFORD, CONNECTICUT.

CLIP.

1,194,882. Specification of Letters Patent. Patented Aug. 15, 1916.

Application filed July 27, 1915. Serial No. 42,219.

To all whom it may concern:

Be it known that I, JOSEPH SACHS, a citizen of the United States, residing at Hartford, in the county of Hartford and State of Connecticut, have invented certain new and useful Improvements in Clips, of which the following is a specification.

This invention relates to clips.

While a clip involving my invention is susceptible of general use, it is of particular utility in the electric art and especially useful in conjunction with what is known as a ferrule contact inclosed fuse. In mounting such an inclosed fuse, it is customary to thrust the contact ferrule ends thereof into clips and where the clip is of large size and made of heavy resilient metal, particular difficulty is experienced in inserting or removing the fuse.

It is the primary purpose of the invention, therefore, to provide a clip having preferably as a part thereof, means by which the lips of the clip can be quickly and easily separated to provide for the ready mounting or dismounting of the fuse.

In the drawings accompanying and forming part of the present specification I have shown in detail one of the many different forms of embodiment of the invention which I will set forth in detail in the following description. I do not restrict myself to this disclosure; I may depart therefrom in several respects within the scope of the invention defined by the claims following said description.

Referring to said drawings: Figure 1 is a perspective view of the clip. Fig. 2 is a like view of an expander for said clip. Fig. 3 is a top plan view, and, Figs. 4 and 5 side elevations of a fuse and its adjuncts constituting a so-called "connector" and including two clips provided with expanding means embodying the invention. Figs. 6 and 7 are end views of the connector shown in Figs. 3, 4 and 5, Fig. 7 showing the connector inverted, the expander being in its extreme positions in the two views.

Like characters refer to like parts throughout the several figures.

In Figs. 3 to 7 I have shown a connector such as used in certain types of meter testing devices, the same comprising a suitable block as 2 of some suitable insulating material as porcelain. The block 2 is shown equipped with two clips 3 adapted to receive a fuse as 4 of inclosed ferrule contact type. As may be inferred I do not restrict myself to any particular form of clip, fuse or carrying means for the clip or clips. In fact I have already intimated that the clip is susceptible of general use. The clips 3 may be held to the block or base 2 in any desirable manner, for instance by screws 5.

As the two clips are the same in construction a detailed description of one will apply to the other, and in this connection reference may be had specifically to Fig. 1. The clip shown in this view comprises the base 6 and the two lips 7 and 8 rising therefrom, the base 6 as shown having the perforation 9 to receive the holding down screw 5. The lips or branches 7 and 8 of the clip between their ends are bowed outward as 10 and 11 to present interiorly thereof substantially rounded or concaved seats opposite and complemental to each other to receive the circular contact ferrule end of the fuse 4. As illustrated the clip 3 is of integral construction and sufficiently resilient so that the lips 7 and 8 can tightly embrace or hug the ferrule end portion of the fuse, sufficiently to make good contact and prevent accidental dislodgment of the fuse. The lips or branches 7 and 8 are relatively expanded or spread whereby their grip on the end ferrules of the fuse is released and thereby provide for the easy insertion or removal of a fuse. To thus relatively expand, spread or separate the lips 7 and 8 the clip is provided with an expander or spreader. An expander such as that denoted in a general way by 12 answers satisfactorily in this connection and the mounting, construction and mode of operation of this expander will be hereinafter more particularly described. The lip 7 as shown has near its free end the seat as 13 in the form of a slot elongated transversely of the lip. The lip 8 is longer than the lip 7, its extended portion 14 having interiorly an inward bulge 15 for a reason that will hereinafter appear and also having a slot 16 elongated in the direction of the length of said lip 8. The body 17 of the expander 12 is bowed outwardly so that it interferes in no wise with a fuse when inserted in the clip. At one end of the bowed body 17 is a projection 18, while at the other is a manipulating or finger piece 19. The slot 13 is adapted to receive the lug 18, while the finger piece 19 projects through the slot 16

which is formed in the bulged or extended portion 14 of the lip 8.

It is an easy matter to connect the expander 12 with the clip 3. To accomplish this the lips 7 and 8 are separated, the finger piece 19 is introduced into the slot 16 and the lug or ear 18 projected through the slot 13. When this is done, the lips 7 and 8 will be released and their free portions will then automatically abut against the ends of the arcuate body portion 17. The expander 12 is supported, as will be clear, for swinging by the lip 7 for movement between the inoperative or inactive position in Fig. 7 in which the clip grips the fuse, to the opertive position in Fig. 6 in which the grip has been released. In Fig. 7 the clip 3 is shown closely hugging the fuse 4, the expander 12 being in its inoperative position. To open the clip or separate the legs thereof, the following procedure may be adopted. The exteriorly accessible finger piece 19 will be grasped or pushed and the expander swung inward on its center of movement, the terminal portion of the arcuate body 17 next the rounded surface 15 riding along said rounded surface, the motion continuing until the expander reaches the position shown in Fig. 6. At the conclusion of this movement the lips 7 and 8 will have been separated laterally an extent sufficient to free the fuse. This operation will then be repeated with a second clip or two clips can be opened simultaneously. When the fuse is freed, it is a simple matter to lift or push the fuse endwise from place and to substitute another for it. When the new fuse is positioned, the expander 17 will be swung upward to the position shown in Fig. 7 thus permitting the lips of the clip to automatically spring against and grip the new fuse.

Inasmuch as the grip of the clip is entirely taken off of the fuse when it is to be removed or a new fuse is to be inserted, the clips may be made to exert a stronger grip on the fuse ferrule when in contacting position as in Fig. 7.

I desire to call attention to the fact that the expanding or spreading element hereinbefore noted by 12 and which normally functions to spread or separate the resilient lips of the clip also serves the further and important office of automatically locking and holding said lips open.

What I claim is:

1. A clip provided with a rigid member in coöperative riding relation therewith and operative to expand the clip.

2. A clip having resilient lips and a rigid member bridging across the lips at the open end of the clip and operative on its movement to relatively laterally separate said lips.

3. A clip provided with resilient lips and an expander in coöperative relation with said lips and operative to relatively laterally separate the same and to automatically lock and hold the same open.

4. A clip having resilient lips, a device movably connected with one of the lips and operative on its movement to relatively separate the lips and to automatically lock and hold them in their open positions.

5. A clip having resilient lips, an expander supported by one of the lips, the other lip having a bulged portion and the expander being movable along the bulged portion to effect separation of the lips.

6. A clip having resilient lips, an expander consisting of a one-piece element supported for swinging movement by one of the lips, the expander being movable and the other lip having a portion engageable by the expander on the movement thereof to effect separation of the lips.

7. A clip having resilient lips, an expander between the lips, one of the lips having a slot and the expander having a lug fitted in said slot, whereby the expander will be supported for swinging movement, the other lip having a portion engageable by the free part of the expander on the movement of the expander to effect separation of the lips.

8. A clip having resilient lips, one of the lips having a slot, the expander between the lips having an outwardly bowed body portion provided at one end with a finger piece and at the other with a lug, one of the lips having a slot to receive the lug to permit swinging movement of the expander, and the other lip having a slot to receive the finger piece, the last mentioned lip having an interior bulge to be engaged by the free portion of the body on inward swinging movement of the expander to thus separate the lips.

9. A clip having lips and a one-piece expander in pivotal engagement with one of the lips at one end and to apply a camming effect to the other lip to effect the relative separation of said lips on the swinging movement of the expander.

In testimony whereof I affix my signature in presence of two witnesses.

JOSEPH SACHS.

Witnesses:
L. L. Markel,
Heath Sutherland.