Dec. 4, 1951 W. TUTTLE ET AL 2,577,245

SHIELDED OPERATOR ASSEMBLY FOR VALVED NOZZLES

Filed Nov. 2, 1949

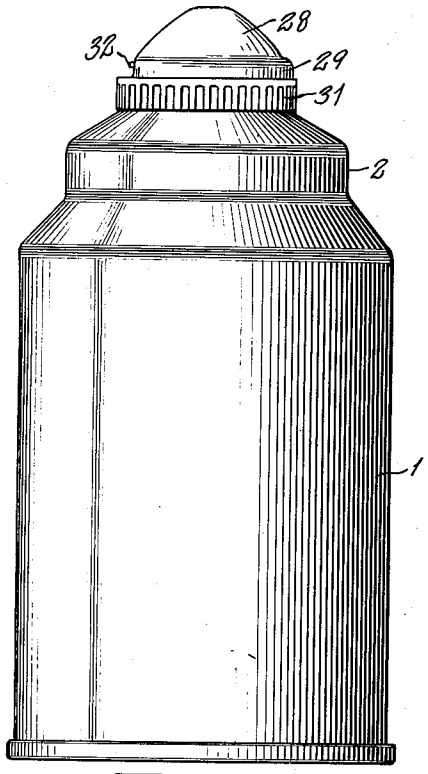

Fig. 1.

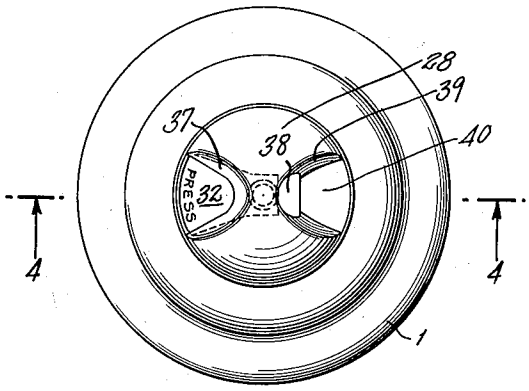

Fig. 2.

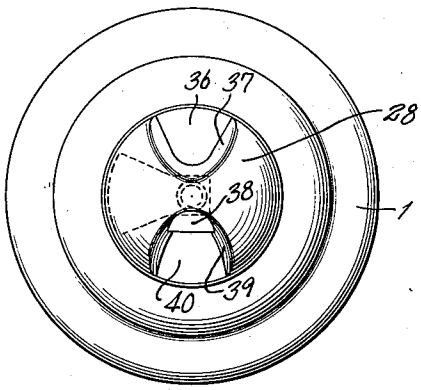

Fig. 3.

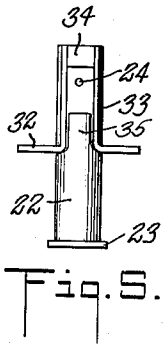

Fig. 5.

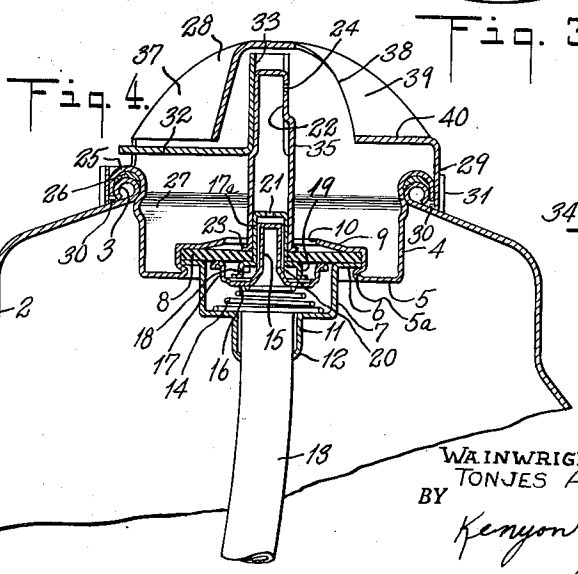

Fig. 4.

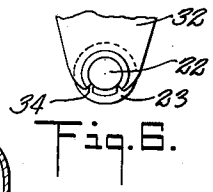

Fig. 6.

INVENTORS
WAINWRIGHT TUTTLE
TONJES A. C. BOTH
BY
Kenyon & Kenyon
ATTORNEYS

Patented Dec. 4, 1951 2,577,245

UNITED STATES PATENT OFFICE

2,577,245

SHIELDED OPERATOR ASSEMBLY FOR VALVED NOZZLES

Wainwright Tuttle, Milford, and Tonjes A. C. Both, Stratford, Conn.

Application November 2, 1949, Serial No. 125,144

3 Claims. (Cl. 299—149)

1

This invention relates to a shielded operator assembly particularly adapted for application to a container of the type that is not refillable by the user and contains fluid under pressure with the container incorporating a built-in assembly including a nozzle controlled by a valve having an operator. Such a type is currently popular for domestic use with the container having the approximate appearance of the seamless crown top type of can, and with the fluid including an insecticide, deodorant, or other material which may be ejected as a pressure spray by the user without requiring the operation of a pump. The mentioned assembly is applied to the mouth instead of a crown top.

A commercially successful form of the above type uses a nozzle, valve and operator arrangement visibly evidenced by a tube projecting upwardly from the mouth of the container with this tube having an orifice near its top and with its bottom connecting with a valve arrangement constructed so that when the tube itself is rocked or canted the valve is opened and the contents of the container is ejected through the orifice. The tube itself functions as a combined nozzle and operator for the valve. The assembly is inexpensive, effective and convenient for the ultimate user who merely tilts or rocks the tube by finger pressure to obtain the desired ejection of material.

But the above described type of nozzle, valve and operator assembly has the disadvantage that it is susceptible to valve operation during its shipment or during handling incidental to its merchandising. The tube may be provided with a covering cap which is itself pushed transversely of the container to operate the tube, but even so the cap is subject to accidental displacement. This disadvantage has necessitated temporarily sealing the tube action by plastic bands or coverings which must be torn off by the ultimate user before the device can be operated. The plastic band does not prevent a sufficiently heavy force from operating the valve.

One of the objects of the present invention is to provide a shielded operator assembly particularly adapted for use when the operator comprises the described tube. Another object is to provide an assembly that is relatively inexpensive to produce and which prevents the accidental application of force to a tilting or rocking operator yet which permits ready operation thereof so it may be worked deliberately when desired. A further object is to produce a shielded operator assembly particularly adapted for application to the described type of container provided with the described type of assembled nozzle, valve and operator, with the shielded assembly capable of being designed so it is pleasing to the eye, so it adequately protects against inadvertent discharge of the contents of the container, so it is sturdy enough to resist blows during shipment of the container and so it permits ready use of the device by anyone deliberately intending to do so and without requiring the reading of extensive instructions.

2

Other objects may be inferred from the following disclosure of a specific example disclosed for the purpose of explaining the principles and operation of the invention. This example is illustrated by the accompanying drawings, in which:

Fig. 1 is a side elevation of a container embodying the present invention;

Fig. 2 is a top view of Fig. 1 showing the new shielded operator assembly as it permits working of the operator controlling the valve;

Fig. 3 is similar to Fig. 2, but with the assembly as it prevents such operation;

Fig. 4 is a vertical cross section taken from the line 4—4 in Fig. 2;

Fig. 5 is an elevation of details illustrated by Fig. 4, and

Fig. 6 is a top view of Fig. 5.

These drawings show the container comprising a seamless drawn can body 1 with the shoudered top 2 and general dimensions characteristic of the seamless crown top type of can currently used to vend beer. The mouth of the container is formed to provide a bead 3. In this instance the diameter of the beaded mouth is a little larger than normally provided to receive a crown top. The construction of the can may be otherwise altered from the typical can of comparable type, as by having its bottom more deeply spherical to better resist internal pressure. The container need not be made of steel, but might very well be drawn and formed from sheet brass, particularly if it is intended to be returned to the manufacturer for refilling with the fluid under pressure. The type of container under discussion is normally not refillable.

In this specific example the described type of nozzle, valve and operator assembly is used. There are various examples of this type in the prior art, but the one specifically disclosed herein is of a novel form disclosed and claimed in a copending application entitled "Dispensing Apparatus" filed by Niles Otto Loven and John T. Efford, November 10, 1947 and bearing Serial No. 785,158. The present invention may be used in

connection with other types of assemblies incorporating a lever-like operator.

The illustrated assembly includes a valve cup 4 having an apertured bottom 5 engaged beneath the peripheral radial flange 6 of a spring cup 7 and on top of which an elastic diaphragm 8 of easy flexible deformability is placed. This diaphragm may be made of elastic material. The bottom of the valve cup 4 is reversely bent to provide a flange 5a supporting peripheries of both the spring cup flange 6 and the diaphragm 8, and is then extended upwardly and radially inwardly to provide a flange 9 terminating with a horizontal hole 10. The valve cup's bottom parts 5a and 9 clamp therebetween the spring cup flange 6 and the diaphragm 8 firmly and fluid tightly. The bottom of the spring cup 7 has a central hole with a depending sleeve 11 which is inwardly turned at 12 on a stand pipe 13 positioned in the sleeve 11 and retained thereby the turned portion 12. This stand pipe 13 extends to the bottom of the container and preferably to the bottom periphery of the latter. The container's bottom is normally in the form of an upwardly projecting spherical segment to resist internal pressure and this shape traps fluid at the periphery—hence the preferred stand pipe arrangement.

A conical spring 14 is positioned in the spring cup 6 with its large end around the hole of the sleeve 11 and with its small end pushing upwardly on a valve head. This valve head includes a short vertical tube section 15 having its top end closed and its bottom end flanged outwardly at 16 and upwardly at 17 with the periphery of the upwardly extending flange 17 bearing against the bottom of the elastic diaphragm 8 and with the diaphragm taking the upward reaction of the spring 14. The bottom of the cup 7 receives the downward reaction from this spring. A valve stem sleeve is provided in the form of a second short tube section 17a that fits over the valve head tube section 15 with a press fit, the bottom of this tube section 17a being flanged radially outwardly at 18 and downwardly at 19 so that the top of its flange 18 bears against the bottom of the diaphragm 8 and the bottom of its flange 19 bears against the top of the flange 16 of the valve head. The interfaces between the tube section 15 and 17a and between the bottom of the flange 19 and the top of the flange 16 are relatively shaped in one instance or the other or in both instances to provide fluid passages 20, and the top of the tube section 17a of the valve stem has an orifice 21.

The rocking or tilting tube forming the combination operator and nozzle is in the form of a long vertical tube 22 that is press fitted over the tube section 17a of the valve stem sleeve with its bottom end flanged at 23 and pressing tightly on top of the elastic diaphragm 8. This long tube section 22 has a closed top and a transverse nozzle or jet orifice 24. This long tube 22 functions as a valve stem. Its flange 23 presses against the diaphragm top so that in cooperation with the flange 18 a fluid tight seal is formed.

The top periphery of the wall 4 of the valve cup 5 is turned over the container's bead 3 at 25 with a valve cup seal or ring gasket 26 providing fluid tightness when the wall portion 25 is forced downwardly by a special tool while the wall 4 is beaded outwardly as shown at 27 to hold the seal in compression.

With this improved assembly the container 1 is fluid-tightly sealed even though the fluid it contains may be under considerable super atmospheric pressure. The container may be shipped or stored without fear of loss of the contents of the can 1 so long as the valve stem tube 22 is not tilted. When this valve stem tube 22 is tilted or rocked by the application of force either intentionally or accidentally, this valve stem tilts by deflection of the elastic diaphragm 19 and the spring 14 so as to tilt the edge of the flange 17 away from the bottom of the diaphragm 8. The latter and the spring 14 elastically deform to permit this action. The diametrically opposite side of the flange 17 functions as a fulcrum against the bottom of the diaphragm 8. As soon as this occurs the fluid under pressure can pass between the separated portions of the flange 17 and diaphragm 19, through the passages 20, the orifice 21 and through the tube 22 and out its orifice 24. The turbulence created by the various expansion chambers and abrupt turns provided by the various parts results in the development of a very finely atomized spray when the fluid in the can is a liquid. With the liquid acting as a carrier for an insecticide, deodorant or other active material, the active material is dispersed throughout the atmosphere in a very desirable manner.

According to the present invention a hollow dome or rounded shield 28 protects the tube 22 which projects outwardly from the diaphragm 8 far enough to provide the valve control. This dome is adapted to be applied over the top hole of the container 1 by being provided with a depending cylindrical skirt 29 that closely encircles the bead 3 of the mouth of the container and the flange portion 25 of the valve cup 4. This flange portion 25 does not depend to the top shoulder of the container 1, so an annular space is thus left. The depending skirt 29 is provided with inwardly extending projections 30 which clip in this annular space when the dome and its skirt are pressed forcibly downwardly.

The fit between the inside of the skirt 29 and the outside of the flange portion 26 which it encircles is a sliding fit permitting rotation of the dome 28 upon the application of adequate torque. Preferably the parts are made relatively tightly fitting so that a fair amount of force is required to rotate the dome, but the fit should be adjusted so that the amount of force required is well within the limits capable of manual exertion. The outside of the skirt 29 is roughened as by having closely spaced vertical flutes 31 whereby to provide a good finger grip. The skirt 29 may be made slightly out-of-round as a practical way for obtaining a tight but rotative fit with the portion 26, the latter being made circular. Thus the skirt may be made slightly elliptical.

Further in accordance with the present invention, a lever member in the form of a flat horizontal tongue 32 is fastened to the tube 22 so that this tongue 32 extends transversely therefrom. When this tongue 32 is depressed by the finger for example it rocks the valve stem 22 so as to effect the valve operation previously described. As shown, the tube 22 is substantially concentric with the container's mouth, so that the dome rotates or turns substantially concentrically about this tube.

This tongue 32 extends transversely from a hub 33 made of elastic sheet material and which is longitudinally split as at 34 to provide this hub with springiness and also to clear the tube nozzle orifice 24. The hub 33 is free fitted or lightly force fitted over the tube 22 and arranged with its longitudinal split 34 providing clearance for

the orifice 24. Thus the tongue 32 is angularly related respecting the orifice 24 radially of the tube 22. In the drawings this relationship is shown as being 180° apart, or in other words with the tongue 32 extending diametrically from the tube 22 respecting the nozzle orifice 24 of this tube. This relationship is maintained by providing the tube 22 with an outwardly projecting key stud portion or projection 35 axially aligned with the orifice 24 and which is therefore embraced by the split 34 of the hub 33. The tube 22 is also provided with a shoulder (see Figure 5) restricting downward motion of the hub 33.

The elasticity of the hub permits wider manufacturing tolerances while permitting high-speed manual assembly of the parts. Preferably the hub 33 drops freely onto the tube nozzle but if made undersize the elasticity provides for installation by very light force fitting.

Any possibility of accidental excessive upward displacement of the hub 33 from the tube 22, such as might release the split 34 from the key projection stud 35, is prevented by the hub 33 being made long enough to project upwardly and engage the bottom of the dome 28 before separation of the split and key stud can occur. The dome provides a closed wall completely covering the top of the tube 22 at all times. The relation between the bottom of the dome 28 and the top of the hub 34 should not be such as to prevent proper rocking of the tube 22. If during shipping vibration for example, the hub 33 slips upwardly so as to engage the bottom of the dome top 28, pressure on the tongue 32 causing rocking of the valve stem tube 22 exerts a replacing pressure plus a cam action between the top of the hub 34 and the bottom of the dome 28. Therefore, the hub 34 is positively replaced to its proper position where there is a very slight clearance between the top of the hub 34 and the bottom of the dome top. In the case of a free fit the hub 33 drops naturally to its proper position when the device is positioned upright.

As illustrated the dome 28 is provided with diametrically opposite openings. These are spaced to either side of the top of the dome and extend down its wall. One of the openings 36 points downwardly and is provided with upwardly tapering side walls 37. The size of this opening is designed to accommodate the average index finger and so that when the dome 28 is turned to register this opening 36 above the tongue 32 the latter may be conveniently depressed by the index finger. The other hole 38 opens transversely from the dome so as to register with the nozzle orifice 24 of the valve stem tube 22 when the opening 36 is registered above the tongue 32. An attractive appearance results by bounding this opening 38 with outwardly flaring walls 39 and a bottom horizontal wall 40. The dome 28 is illustrated as comprising a single piece of sheet material such as a sheet metal stamping integrally providing both the dome 28 and the dome skirt 29, and the various walls 37, 39 and 40. The fluted periphery 31 may be provided by a separate ring pressed over the skirt 29 or may be integrally formed in the skirt.

The tongue 32 and its hub 33 are also made from sheet metal as are all the various parts of the nozzle, valve and operator assembly, except, of course, the diaphragm 8 which may be made of natural or synthetic rubber or other material having suitable elastic properties. The sheet metal used may be either sheet steel or brass.

Assembly of the various parts is easy. The hub 33 is merely slipped over the valve stem tube 22 so that its split 34 embraces the valve stem key projection or stud 35. This automatically registers the split 34 with the nozzle orifice 24 and orients the tongue lever 32 so that it is angular relative to the nozzle hole. This angular relationship is necessary so that the user will not be sprayed, the angular relationship preferably being the 180° illustrated. After this simple assembly step the only other step necessary is to push the dome 28 into position so that its skirt studs or lugs or projections 30 snap in place beneath the flange portion 25. This automatically anchors the hub 33 against excessive upward movement. The holes 36 and 38 in the dome 28 must be oriented to permit simultaneous registration with the nozzle orifice 24 and the tongue lever operator 32 upon appropriate rotation of the dome 28.

With the dome 28 turned to the position shown by Fig. 3 the container is ready for shipment. There is obviously no chance for inadvertent depression of the lever 32 or movement of the valve stem 22 during shipment, storage or merchandising of the device. This is true even though a large number of the devices are jumbled together for display. The need for plastic seals or tapes, or other insecure expedients is eliminated. But note that both the jet orifice and the operator are protected by the dome wall which covers both when turned to cover either. A plastic band or covering may be applied, however, to assure customers that they are purchasing an unused and brand new device.

The ultimate user merely twists the dome 28 to the position shown by Fig. 3. No instructions are required because the flutes 31 provide a psychological invitation to turn the dome 28. By putting the legend "press" on top of the tongue lever operator 32, as shown, the user is induced to stop turning the dome 28 at the proper point. The user is also induced to press the tongue 32. The flat wall 40 of the nozzle opening 38 in the dome normally warns the user that it is this direction in which the spray discharge will occur. If desired this wall 40 may be colored red as a further warning to the user. Taking all these things into consideration it is now obvious that the present invention provides a practically foolproof shielded nozzle and valve assembly for a container of the type adapted to hold fluid under pressure and having the described type of nozzle, valve and operator which is normally tilted to effect spray action.

As a feature of this foolproofness the tongue 32 is made long enough to overlie the container mouth bead 3 and is spaced just a little above the top of the flange 25 by the shoulder 36. The arrangement is such that the tongue engages the flange 25 when pressed just enough for effective valve action in the manner described. Further pressure such as might damage the valve parts is prevented from reaching these parts by the container mouth or bead providing a reaction therefor, that is to say the tongue pressure is transmitted to the top of the flange 25 and so to other parts. Thus it is almost impossible to damage the parts protected and shielded by the assembly of the present invention.

The shield 28 and the tongue 32 and its hub 33 may be made of a suitable plastic instead of metal. Polystyrene may be used for example. Metal has been described as being elastic, which is intended to mean that the material is elastically

deformable when the parts described are placed under beam stress by manual force. That is to say, the parts are springy so the hub may be expanded in a springy manner where it is split and the skirt **29** may be pushed over the shoulder or bead formed by the flange portion **25** so the projections **30** can snap into the annular space formed therebeneath. Plastics are available which also provide such elasticity or springiness.

In some instances the tube **22** has its orifice **24** in the top end of this tube so the material is ejected longitudinally from the tube. In such instances the portion of the shield **28** having the opening **38** may be formed as a continuation of the general spherical shape with the opening **38** shifted to the top of the shield above the end of the tube **22**. When rearranged in this manner the opening may be in the form of a round hole adequately large in diameter to assure clearance for it to operate when the tube **22** is tilted to open the valve. Rotation of the shield continues to function in this rearrangement to protect the lever **32** by covering it or to expose this lever depending on the rotative position of the shield.

We claim:

1. A shielded operator assembly including a manually worked operator, a shield with an opening therethrough, said shield being mounted to move between positions respectively registering said opening with said operator to permit the latter to be manually worked and covering said operator to protect it, said operator comprising a lever extending transversely from a nozzle tube adapted to be manually swung to operate a valve therefor and having a jet orifice pointing radially away from said lever, and with said shield rotating between said positions around said tube and including a second opening oriented respecting the first-named opening so that rotation of said shield to said registering position registers said second opening with said jet orifice and rotation to said other position covers said jet orifice.

2. An assembly as defined by claim 1 with said lever having a hub slidably fitted over said tube with a clearance space for said jet orifice and with a portion extending axially beyond said tube's end opposite that operating its valve, and with said shield extending over said hub portion to hold said hub on said tube.

3. An operator for a nozzle tube adapted to be manually swung to operate a valve therefor, said operator comprising a hub adapted to be fitted over said tube with a lever extending transversely from said hub, said tube having a transverse jet orifice and said hub having a clearance opening therefor.

WAINWRIGHT TUTTLE.
TONJES A. C. BOTH.

REFERENCES CITED

The following references are of record in the file of this patent:

UNITED STATES PATENTS

Number	Name	Date
1,800,156	Rotheim	Apr. 7, 1931
2,506,449	Greenwood	May 2, 1950

FOREIGN PATENTS

Number	Country	Date
366,626	Great Britain	Feb. 11, 1932
399,302	Germany	July 29, 1924