United States Patent [19]

Tome

[11] **3,921,315**

[45] **Nov. 25, 1975**

[54] **SNOW BLOWER SAFETY CHUTE**

[75] Inventor: **Floyd Tome,** Clifton, N.J.

[73] Assignee: **Eska Company,** Dubuque, Iowa

[22] Filed: **Nov. 18, 1974**

[21] Appl. No.: **524,553**

Related U.S. Application Data

[63] Continuation of Ser. No. 377,554, July 9, 1973, abandoned.

[52] **U.S. Cl.** ..... **37/43 R;** 37/430 X

[51] **Int. Cl.²** **E01H 5/00**

[58] **Field of Search** ..... 37/43 A–43 L, 37/43 R, 53, 22–27, 10, 34, 37, 59, 6; 302/10, 34, 37, 59, 6, 29, 56, 60; 193/15–17, 22; 285/272, 275, 278, 279–282, 330–353; 222/226.251, 459, 216

[56] **References Cited**

UNITED STATES PATENTS

1,096,041	5/1914	Link	37/430 X
1,107,015	8/1914	Babcock et al.	302/56 X
1,254,868	1/1918	Wallace et al.	37/43 R X
2,048,118	7/1936	Gonan et al.	222/196.2
2,048,139	7/1936	Porteous	302/56
2,627,155	2/1953	Shuler et al.	37/43 R X
3,298,748	1/1967	Hultgren	302/60
3,468,041	9/1969	Mattson et al.	37/43 E
3,497,263	2/1970	Heth et al.	37/43 R X
3,509,977	5/1970	Bacon	193/22
3,721,025	3/1973	Orr	37/43 E
3,780,455	12/1973	Stevenson	37/43 R

FOREIGN PATENTS OR APPLICATIONS

1,051,228	12/1966	United Kingdom	222/226

Primary Examiner—Edgar S. Burr
Assistant Examiner—James R. Feyrer
Attorney, Agent, or Firm—James C. Nemmers; Haven E. Simmons

[57] **ABSTRACT**

An improved construction for safely unplugging the discharge chute on rotary snow blowers. The discharge chute is constructed in two parts with the upper or discharge end turnable with respect to the fixed lower end. The discharge end has several prongs extending down into the stationary portion of the chute, and when the discharge end is turned the prongs will loosen any snow that becomes packed in the stationary portion of the chute.

5 Claims, 5 Drawing Figures

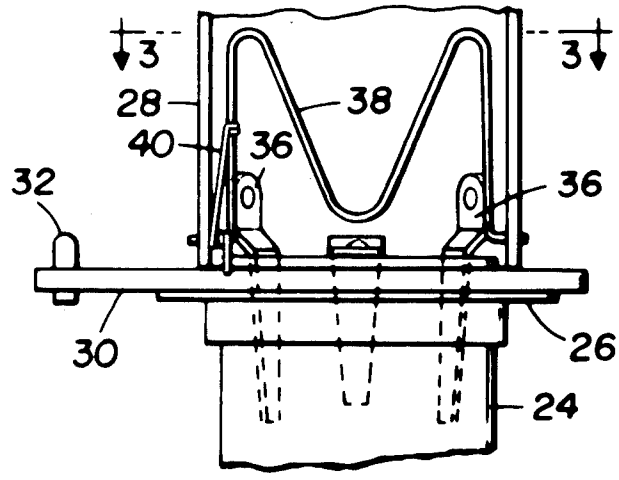

FIG 1

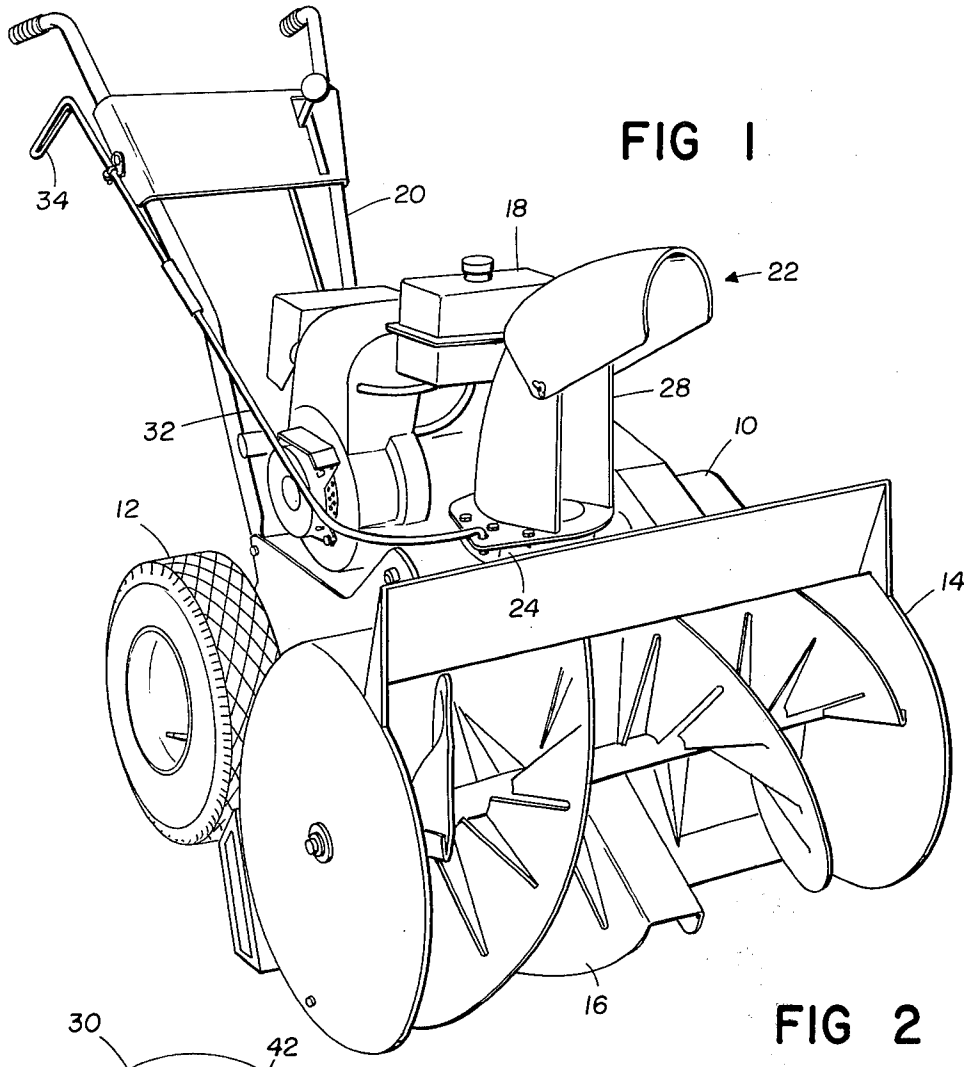

FIG 2

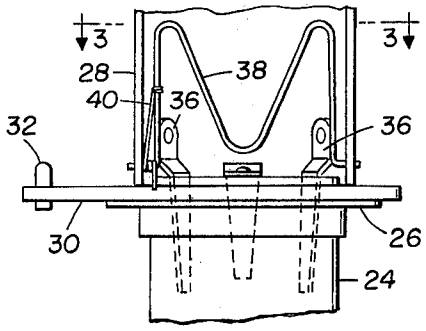

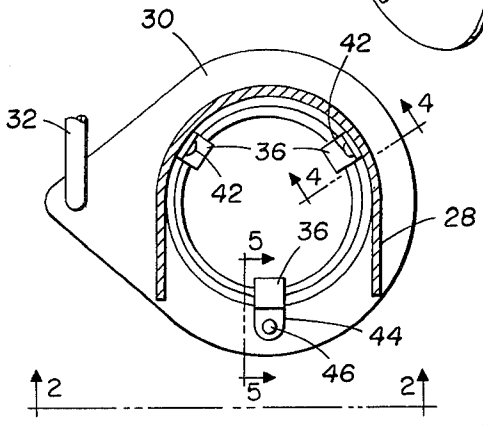

FIG 3

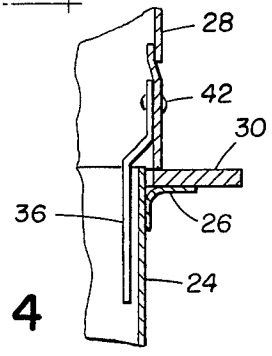

FIG 4

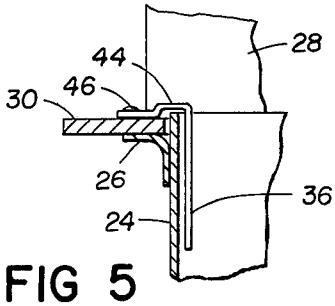

FIG 5

SNOW BLOWER SAFETY CHUTE

This is a continuation of application Ser. No. 377,554 filed July 9, 1973 now abandoned.

BACKGROUND OF THE INVENTION

Power driven rotary snow blowers are becoming increasingly used by the average homeowner. When properly used and maintained, these machines are great labor savers and minimize the risk of overexertion which can result in a heart attack or back problems if snow is removed with the common hand shovel. However, like any power operated machine, they must be used with caution. A common problem with the auger type snow blower is that the chute through which the snow is discharged can become plugged with snow, particularly when the ambient temperature is around freezing or slightly above and the snow becomes wet and tends to pack. When this occurs, the snow tends to pack in the stationary part of the snow discharge chute which directs the snow from the rotating auger through a directional portion of the chute that can be moved to direct the snow to one side or the other of the blower. When plugging of the stationary part of the chute occurs, operators of the blower sometimes become careless and reach inside of the chute with a hand to loosen the snow packed in the chute so that it can be blown out. If the operator reaches too far, he can suffer serious injury to his hand. The safe and common procedure is to stop the engine on the blower, clean out the wet snow, restart the engine and resume the operation. This, of course, is time consuming and troublesome and therefore operators will sometimes employ the dangerous practice of using their hand or by sticking a piece of wood or metal into the chute to free snow that becomes packed in it. Such dangerous practices are cautioned against by the manufacturers of snow blowers, but each year a number of injuries result from operators who ignore these cautions. There is, therefore, a need for a safe method of unplugging the discharge chute of snow blowers without the necessity of stopping the machine. Any such method must be simple and convenient so that the operator will, in fact, use it. Also, any such method must be very inexpensive since the public generally does not like to pay higher prices merely for safety features.

SUMMARY OF THE INVENTION

The invention provides a simple and improved construction for the discharge chute of a rotary snow blower which will permit easy and convenient unplugging of the chute. The chute is commonly made in two parts, with an upper or discharge portion being turnable so as to direct the snow to one side or the other of the machine as selected by the operator. In constructing the discharge chute utilizing the principles of the invention, several prongs are affixed to the lower end of the movable or discharge portion of the chute, and these prongs extend downwardly into the stationary portion of the chute. Whenever the chute becomes plugged, the operator merely has to pull the operating handle to turn the upper portion of the chute thus moving the prongs around the inside of the lower portion of the chute and loosening the packed snow. This is accomplished by the operator from the normal operating position behind the snow blower and eliminates the need for stopping the machine and manually removing the plugged snow from the chute. The addition of these prongs adds very little to the cost of the machine, but greatly increases the safety of its use.

BRIEF DESCRIPTION OF THE DRAWINGS

FIG. 1 is a perspective view of a rotary snow blower of the type to which the invention relates;

FIG. 2 is a side elevational view of a portion of the discharge chute of the blower of FIG. 1;

FIG. 3 is a sectional view of the discharge chute taken on the line 3—3 of FIG. 2; and

FIGS. 4 and 5 are sectional views of portions of the discharge chute taken on the lines 4—4 and 5—5, respectively, of FIG. 3.

DESCRIPTION OF THE PREFERRED EMBODIMENT OF THE INVENTION

Referring to FIG. 1, there is shown a rotary snow blower of a well-known design which blower has a moldboard 10 at the sides of which are mounted ground wheels 12 and at the front of which is secured a housing 14 that supports and partially encloses a rotary rake assembly 16. On top of the moldboard 10 there is affixed a power unit 18 which is preferably a gasoline powered engine. At the rear of the unit there is affixed to moldboard 10 an operating handle 20 which supports the various operating levers so that the unit can be controlled from the rear by an operator. As is well-known to those skilled in the art, the operator steers and controls the blower through the snow to be removed, and the snow is picked up by the rotary rake assembly 16 and discharged through a passageway provided by a discharge chute indicated generally by the reference numeral 22.

The discharge chute 22 includes a stationary portion 24 that is affixed to the housing 14. The stationary portion 24 has at its upper end an annular outwardly extending flange 26 upon which rests the upper or discharge portion 28 of the chute 22. The discharge portion 28 has an outwardly extending flange 30 at its lower end which flange 30 rests upon the flange 26 of the lower portion 24. The discharge portion 28 of the chute 22 is turnable with respect to the lower portion 24 for the purpose of directing the discharge of the snow in the desired direction. Turning of the discharge portion 28 is accomplished by an operating rod 32 that is connected at one end to the flange 30, and to a control rod 34 affixed to the handle 20 at a position convenient to the operator. The discharge portion 28 can thus be turned within an arc of approximately 180° to direct the discharge of the snow to one side or the other of the blower.

Particularly when the snow being removed is wet, the snow will tend to pack in the stationary portion 24 of the discharge chute 22. Normally, this involves stopping the machine and reaching down into the portion 24 and loosening the snow. Obviously, this procedure would be extremely dangerous if the machine were in operation with the rotary rake assembly 16 turning. Stopping and restarting the blower is both time consuming and inconvenient. Therefore, I have provided a series of prongs 36 which are affixed at their upper ends to the discharge portion 28 and extend downwardly into the passageway formed by the stationary portion 24. As best seen in FIGS. 2 and 3, there are three such prongs spaced evenly around the outer periphery of the passageway formed by stationary portion 24. Thus, when the discharge portion 28 is turned, the

prongs **36** will "slice" through the packed snow and loosen it allowing it to be blown out through normal action of the blower.

As a further safety feature, a wire guard **38** is positioned in the discharge opening of discharge portion **28** to prevent the operator from putting his hand into the chute. Guard **38** preferably is pivotally mounted on the discharge portion **28** as shown in FIG. **2**, and a spring **40** is preferably provided which will allow the guard **38** to be moved outwardly under pressure of the snow being discharged, but the spring **40** will return the guard **38** to its position blocking the discharge opening whenever the snow is not being discharged.

I have shown the use of three prongs **36** evenly spaced around the discharge passageway formed by the chute **22.** Each of the prongs is secured to the discharge portion **28** in any suitable manner. In the embodiment shown, two of the prongs are secured to the portion **28** by suitable fasteners **42** while the third prong **36** has an outwardly extending leg **44** which is secured by fastener **46** to the flange **30.** This construction is provided so that the third prong does not block the discharge opening of the portion **28.**

The use and operation of the blower, particularly the discharge chute to which the invention relates is evident from the foregoing description. There are obviously a number of modifications and variations that can be made to the specific construction shown in the preferred embodiment disclosed herein. It is my intention, however, that all such modifications and variations, as well as all revisions which would be obvious to those skilled in the art will be included within the scope of the following claims.

I claim:

1. For use in an apparatus for removing snow, said apparatus including a supporting structure, removal means for picking up the snow from the ground, and an improved chute providing a discharge passageway for directing the snow from the removal means away from the apparatus, said improved chute comprising a first portion having a wall defining a discharge passageway communicating with said removal means, a second portion of said chute movably affixed to said first portion and having a wall providing a continuation of said discharge passageway, said second portion having an inlet opening and a discharge opening and being turnable with respect to said first portion to direct the snow from said passageway in a selected direction out of said discharge opening, and means for loosening snow which has accumulated in the passageway of said first portion, said last mentioned means consisting of at least one prong fixed to said second portion around the inlet opening thereof and extending into the discharge passageway of said first portion close to the inner surface of the wall defining said passageway.

2. The chute of claim **1** in which the wall of said first portion provides a passageway that terminates in a passageway substantially circular in cross-section, and said last mentioned means affixed to said second portion includes at least one prong which is a flat, relatively thin elongated member affixed to said second portion around the inlet opening thereof, said member extending downwardly into and around the outermost periphery of the terminal portion of the discharge passageway provided by said first portion, with the flat sides somewhat parallel to the wall of said first portion.

3. The chute of claim **1** in which there is provided control means for turning said second portion, said control means having an operating handle located remotely from said chute.

4. The chute of claim **3** in which said first portion has an outwardly extending flange at its terminal end, and said second portion has an outwardly extending flange around the inlet opening thereof which flange is engageable with the flange of said first portion, said control means being operatively connected to the flange of said second portion.

5. The chute of claim **1** in which there is provided safety means extending partially across the discharge opening of said second portion to guard against a person placing a hand inside said chute, said safety means being pivotally mounted so as to be movable from a first safety position to a second position that does not interfere with the discharge of snow from said chute, and spring means normally biases said safety means to said safety position when snow is not being discharged from said chute.

* * * * *