C. H. HAMMOND.

NON-REFILLABLE BOTTLE.

APPLICATION FILED JUNE 18, 1913.

1,086,324. Patented Feb. 3, 1914.

Fig. 1.

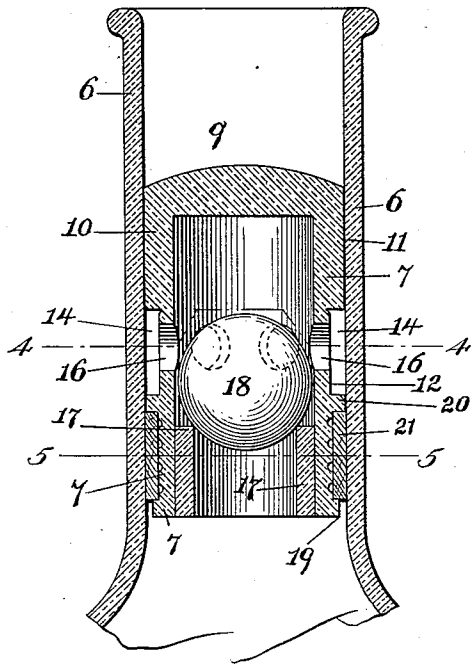

Fig. 2.

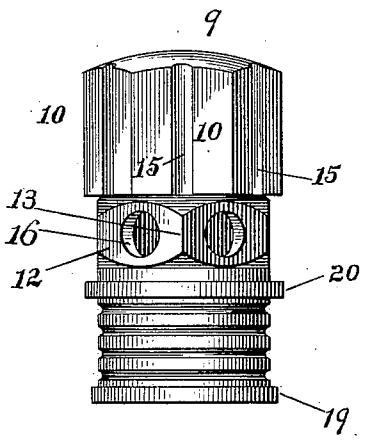

Fig. 3.

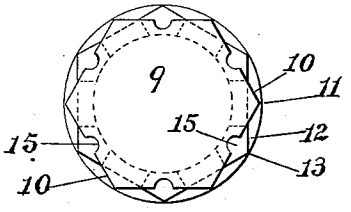

Fig. 4.

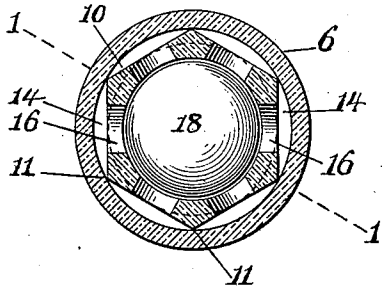

Fig. 5.

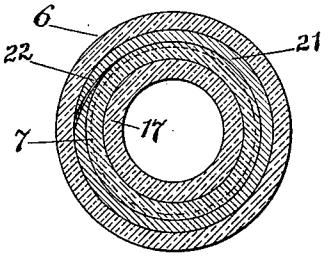

Witnesses

Edwin L. Bradford

G. Ferd. Vogt.

Inventor

Charles H. Hammond

By Mann & Co

Attorneys

COLUMBIA PLANOGRAPH CO., WASHINGTON, D. C.

UNITED STATES PATENT OFFICE.

CHARLES H. HAMMOND, OF BALTIMORE, MARYLAND, ASSIGNOR OF ONE-HALF TO JOHN S. MARKOE, OF BALTIMORE, MARYLAND.

NON-REFILLABLE BOTTLE.

1,086,324. Specification of Letters Patent. Patented Feb. 3, 1914.

Application filed June 18, 1913. Serial No. 774,330.

To all whom it may concern:

Be it known that I, CHARLES H. HAMMOND, a citizen of the United States, residing at Baltimore, in the State of Maryland, have invented certain new and useful Improvements in Non-Refillable Bottles, of which the following is a specification.

This invention relates to a non-refillable bottle.

The object of the invention is to provide improved means for preventing bottles that have been emptied of liquid contents, and which bear well known names, brands or labels, from being refilled with inferior imitations of the genuine liquid originally contained in the bottle.

The several parts comprising the mechanical means which prevent refilling may be made of porcelain, aluminum, or any non-oxidizable material that will be innocuous to the liquid that will be contained in the bottle.

The accompanying drawing illustrates the improved device which constitutes the subject-matter of this invention.

Figure 1 is a vertical section of the neck of an ordinary bottle and the mechanical parts constituting this improvement; the section is on line 1—1 of Fig. 4. Fig. 2 is a side view of the shell that is inserted into the bottle-neck. Fig. 3 is a top view of the shell. Fig. 4 is a cross-section of the parts on the line 4—4 of Fig. 1. Fig. 5 is a cross-section on the line 5—5 of Fig. 1.

Referring now to the drawing the bottle to which this improvement is applicable may be of any preferred or well-known shape, but should have a neck, 6, whose throat or bore passage is substantially straight.

The device shown in the drawings and now to be described, will permit the liquid contents of a filled bottle to be partly or entirely emptied or discharged, but will prevent liquid from being entered into the bottle by any ordinary means or operation.

The numeral, 6, designates the neck of bottle; a shell, 7, is molded and forms a circular chamber which has a uniform diameter vertically from top to bottom and whose lower end, 8, is open and whose upper end is entirely closed by the crown, 9. The exterior surface of this shell has two sections one above the other, each of which has hexagon sides. The uppermost hexagon section, 10, is shown in horizontal cross-section in Fig. 4; and the lower hexagon section, 12, is shown in vertical section in Fig. 1. Both of these six-sided, or hexagon-shaped exteriors, are shown in Fig. 2 and also in Fig. 3. The six flat sides of each hexagon exterior section form vertical points or angles that project; the points on the uppermost section are designated, 11, and the points on the lower section are designated, 13. The vertical relation of the flat sides and angle points of these two hexagon exterior surfaces respectively, is plainly shown in both Figs. 2 and 3, and this relation consists in having the angle points of one hexagon section in vertical alinement with the center of the flat sides of the other hexagon section.

The flat sides of the upper hexagon section are each provided with a central vertical groove, 15, which serves as a discharge passage. The flat sides of the lower hexagon section form, in the bottle-neck, a discharge passage, 14.

When the shell, 7, is inserted in the neck, 6, of the bottle all the angle-points of both hexagon sections will nearly contact with the interior surface of the bottle-neck, 6. This structure will form in the bottle-neck and around the shell, 7, two sets of discharge passages, 14, 15, those of one set having staggered position relative to those of the other set; this provides a free discharge.

Open ports, 16, are provided in the lower hexagon section,—one port being in each of the six flat sides; these ports allow the liquid in the bottle to pass from the interior chamber of the shell to the discharge passages, 14.

A valve-seat, 17, is formed inside of the circular chamber of the shell, 7, by a ring that is inserted into the lower end of the circular shell; a valve, 18, is within the shell and closes by resting on this seat, 17. When the valve is closed no liquid can be filled into the bottle. In this instance the valve, 18, comprises a ball that must be entered into the bottom of the shell before the ring, 17, is inserted; the ring must be secured to its position so that it will not slip out.

The operative parts that will permit liquid to be discharged from the bottle, without allowing liquid to be entered by way of the mouth into the bottle, have now been described.

The shell of the foregoing described structure must be securely held or fastened within the bottle neck. The means provided for this purpose will now be described.

The exterior of the shell, 7, at its lower edge has an outside ring or flange, 19, and another similar ring or flange, 20, is on the outside above the lower one and the two fit snugly within the bottle neck, but are spaced apart or separated. A wood collar, 21, is split vertically, and the ends of the split are tapered tangentially, as at 22, so that said tapered ends overlap each other, as shown in Fig. 5. This wood collar has a spring quality or characteristic, that constantly tends to separate its two ends and expand or press outward in close contact with the interior surface of the bottle-neck. This wood collar, before being put to use, is steamed and dried.

Before applying this device the bottle must be filled with the liquid it is to contain. Then a wood split collar, 21, should be placed around the shell, 7, in the space between the two flanges, 19, and, 20, and then the said shell with the wood collar on it, inserted into the mouth of the bottle and forced down into the neck to the desired position. The wood collar will fill the neck of the bottle closely, and will retain the shell in its proper position; the crown, 9, of the shell will be uppermost. The liquid contents of the bottle may then be partly or entirely emptied, but the empty bottle can not be refilled.

The parts of this device which prevent refilling can not be removed from the bottle neck without breakage.

The mouth of the bottle may be closed by using a cap, or by inserting an ordinary cork.

In the description the exterior of the two upper parts, 10, and 12, of the shell, have been termed "hexagon" sided because in the present instance they have six sides, but it is obvious they would operate just the same if they were seven sided or eight sided, the inventive idea therefore may be termed polygonal sided.

Having thus described my invention what I claim and desire to secure by Letters Patent is:—

The combination with a bottle having a neck with a straight smooth passage therein, of a shell in said neck which latter has a centrally closed enlargement at the outer end, a circular enlargement at the inner end and a circular enlargement intermediate said end-enlargements, said shell also having a central chamber between the intermediate enlargement and the outer enlargement which chamber extends above the lower edge of the said outer end enlargement,—the shell also having lateral passages which extend from the central chamber outwardly and open at a point spaced from and above the said intermediate enlargement and the outer end-enlargement having longitudinal passages whose lower ends terminate above the lateral passages and also terminate above the intermediate enlargement and between the intermediate and lower enlargement the interior of the shell having a ring-shaped valve seat; a ball in the central chamber and a wood collar encircling the shell between the lower and intermediate enlargements to expand and lock the shell in the bottle neck.

In testimony whereof I affix my signature in presence of two witnesses.

CHARLES H. HAMMOND.

Witnesses:
G. FERD. VOGT,
CHAS. B. MANN.

Copies of this patent may be obtained for five cents each, by addressing the "Commissioner of Patents. Washington, D. C."