G. DURHAM & C. W. McGUIRK.

APPLYING CLEANSING LIQUIDS.

APPLICATION FILED OCT. 13, 1913.

1,185,888.

Patented June 6, 1916.

2 SHEETS—SHEET 1.

-FIG. 1.-

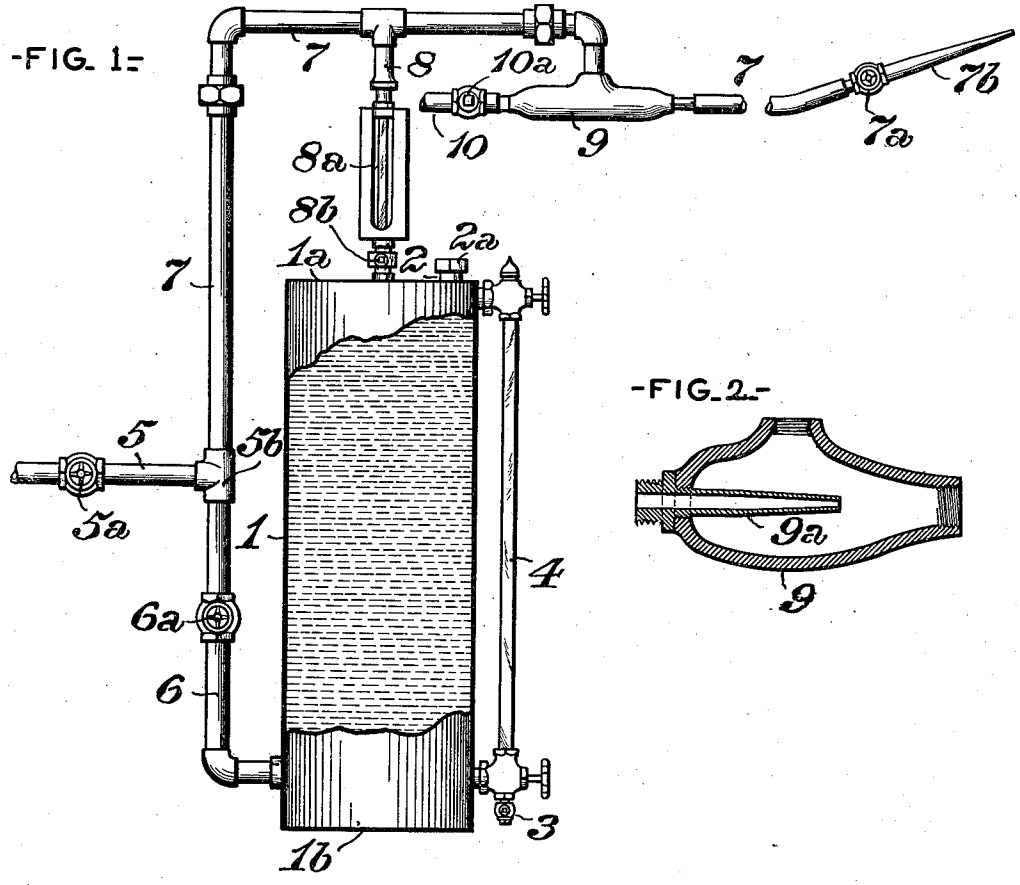

-FIG. 2.-

WITNESSES

Edward A. Wright.

S. R. Bell.

INVENTORS

George Durham,

Charles W. McGuirk.

by J. Newden Bell,

atty

G. DURHAM & C. W. McGUIRK.
APPLYING CLEANSING LIQUIDS.
APPLICATION FILED OCT. 13, 1913.

1,185,888.

Patented June 6, 1916.
2 SHEETS—SHEET 2.

-FIG. 3.-

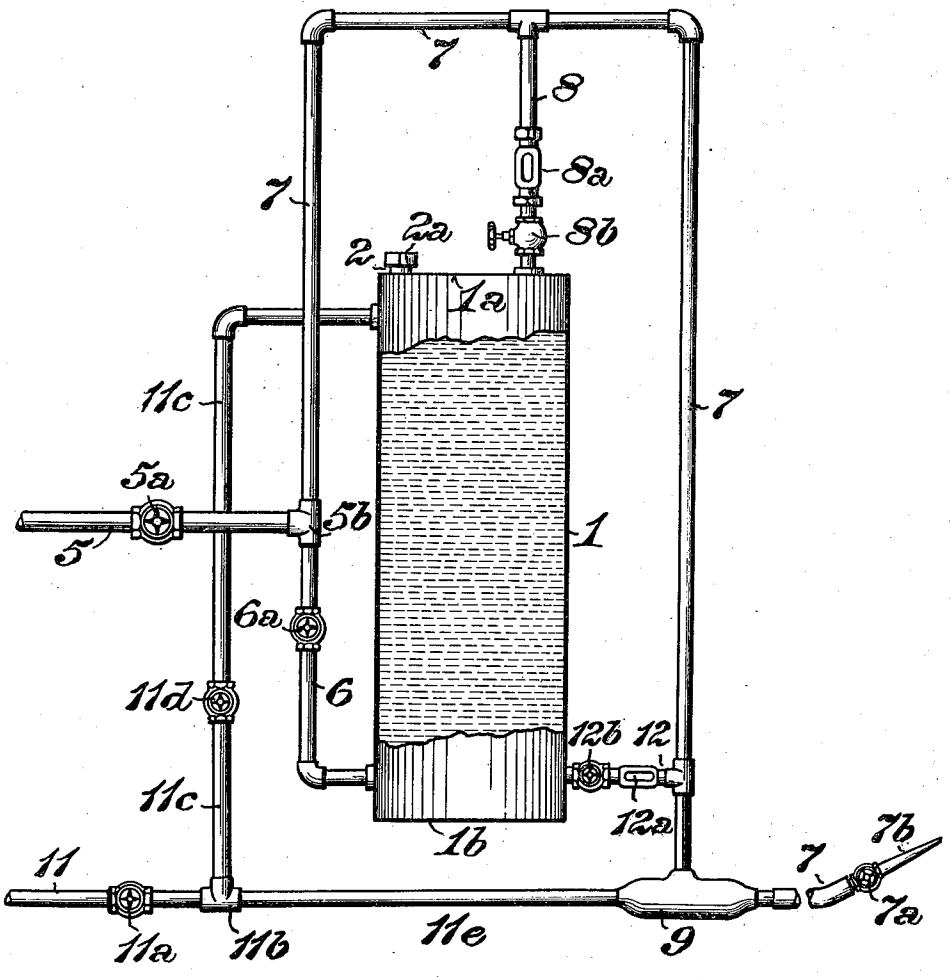

WITNESSES
Edward A. Wright
S. R. Bell.

INVENTORS
George Durham.
Charles W. McGuirk
by J. Snowden Bell. atty

UNITED STATES PATENT OFFICE.

GEORGE DURHAM AND CHARLES W. McGUIRK, OF SCRANTON, PENNSYLVANIA.

APPLYING CLEANSING LIQUIDS.

1,185,888. Specification of Letters Patent. Patented June 6, 1916.

Application filed October 13, 1913. Serial No. 794,811.

To all whom it may concern:

Be it known that we, GEORGE DURHAM and CHARLES W. McGUIRK, both of Scranton, in the county of Lackawanna and State of Pennsylvania, have jointly invented a certain new and useful Improvement in Applying Cleansing Liquids, of which improvement the following is a specification.

The accumulation of foreign matter upon the exterior of locomotives, and other vehicles, is frequently so great as to prevent careful inspection of the various parts, making it difficult and sometimes impossible to detect fractures and other inperfections which, if not remedied, may cause serious accidents. It is desirable, therefore, that the running gear and other parts of locomotives and other vehicles be frequently cleaned, and it is customary to clean them by wiping off the foreign matters. This results, however, in an imperfect cleaning owing to the difficulty in getting at the complicated parts of the running gear and in removing the foreign matter from the many recesses therein. To wash off this matter with streams of water has proven to be impracticable owing to the oily and greasy nature of the deposits.

The object of our invention is to provide an apparatus by means of which the accumulations on locomotives or other vehicles may be rapidly and efficiently removed and the frame and parts freed from oil and other foreign matters.

We have discovered that if some cleansing fluids, and especially oil, be mixed with water by admitting the cleansing fluid to the water in properly regulated quantities while the water is flowing through a line of pipe, and the mixture is subjected to a stream of air at high velocity while it is being carried by the water and prior to its discharge from a nozzle the oil in the water will be broken up into extremely minute particles, and when the stream is impinged against the surfaces to be cleansed at the high velocity imparted to the stream by the air, a most effective and altogether unusual action takes place. For example, we have found in practice that if to a stream containing a mixture of oil and water in the proportion of about five hundred gallons of water to two gallons of oil a stream of air at high velocity be admitted, at a point between the oil feeding device and the point of ejectment of the stream that the impinging of this stream against the oily surfaces of locomotives, engines or other vehicles entirely removes the oil and accumulated material, leaving them clean and free from these matters.

In the accompanying drawings: Figure 1 is a vertical section through an apparatus adapted to the practice of our invention, when a cleansing liquid of lesser specific gravity than water is used; Fig. 2, a longitudinal section through an ejector for facilitating the discharge of the mixture; and, Fig. 3, a vertical section through an apparatus adapted for use with a cleansing liquid of either lesser or greater specific gravity than that of water.

Referring first to Figs. 1 and 2, of the drawings, we provide a storage tank, 1, which is preferably of cylindrical form, and ordinarily of such dimensions as to be conveniently portable, said tank being closed at top and bottom by tight heads, 1^a and 1^b. An inlet, 2, closed by a removable plug or cap, 2^a, is fixed in the top head of the tank, and a drain cock, 3, is connected to the tank adjacent to its bottom. A glass gage tube, 4, for indicating the level of liquid in the tank, communicates, at each of its ends, therewith.

A water supply pipe, 5, leading from a hydrant, main, or other source of supply under hydrostatic pressure, and controlled by a cock or valve, 5^a, is connected, by a T, 5^b, to a pressure equalizing pipe, 6, which leads into the tank, 1, near its bottom, and is controlled by a cock or valve, 6^a, and to a line of mixing and discharge pipe, 7, having a suitable spraying nozzle, 7^b, on its opposite end, and controlled by a cock or valve, 7^a. The pipe line, 7, communicates with the top of the tank through a cleansing liquid pipe, 8, and an indicator or sight gage, 8^a, governed by a cleansing liquid control valve, 8^b.

In order to properly effect the discharge of the cleansing mixture, fluid under pressure, as compressed air, is supplied to an ejector, by which the discharge pressure is augmented to the proper degree, and which is connected with the mixing and discharge pipe line, 7. Any suitable known construction of this type may be applied, in the discretion of the constructor, the simple form exemplified in Figs. 1, 2 and 3, which is one well adapted to the purpose, consisting of a chamber 9, connected laterally to a section

of the pipe line 7, and having a contracted nozzle 9^a, projecting into one of its ends, its opposite end being connected to another section of the pipe line 7. The nozzle 9^a communicates by a pipe line 10, controlled by a cock or valve 10^a, with a source of fluid pressure (not shown) as an air compressor or a reservoir of compressed air.

In the operation of the apparatus, the storage tank is charged with oil or other suitable cleansing liquid or solution, by closing the valves, 5^a and 6^a, and after first discharging from the tank, through the drain cock, 3, any water that may be standing therein, as indicated by the gage tube, 4, filling the tank through the inlet, 2, which is thereafter closed by its plug, 2^a. The valves, 5^a and 6^a, are then opened, and water from the supply pipe, 5, enters the storage tank at both ends thereof. The pressure of the water supply on the cleansing liquid therein, the specific gravity of which is less than that of the water, is thereby equalized at the opposite ends of the tank, and the lighter cleansing liquid rises above the water therein, and passes through the sight gage, 8^a, and pipe, 8, to the discharge pipe, 7, within which it is mixed, in proportion determined by the adjustment of the control valve, 8^b, with the water delivered from the supply pipe, 5, and the mixture is discharged upon the matter to be cleansed, through the spraying nozzle, 7^b, by the fluid pressure in the pipe, 10, supplemented by the hydrostatic pressure in the water supply pipe, 5.

The structural modification of the apparatus which is shown in Fig. 3, is adapted for the application of cleansing liquids which are either of lesser or of greater specific gravity than that of water. The storage tank, 1, is of similar construction to those before described, and is similarly provided with a filling nozzle, 2, closed by a plug, 2^a, and with a glass gage tube, 4, which, however, not being in the plane of section, is not shown in the drawing. The water supply pipe, 5 which, as before, is controlled by a cock or valve, 5^a, is connected by a T, 5^b, to a pressure equalizing pipe, 6, leading into the storage tank near its bottom, and controlled by a cock or valve, 6^a, and to the mixing and discharge pipe line, 7, and said line communicates with the storage tank, near its top, through a cleansing liquid pipe, 8, and an indicator or sight gage, 8^a, governed by a cleansing liquid control valve, 8^b, as in the instance first described. A fluid pressure pipe, 11, leading from a source of fluid under pressure, as an air compressor or reservoir of compressed air, and controlled by a cock or valve, 11^a, is connected by a T, 11^b, to a pipe 11^c, leading to the upper end of the storage tank and controlled by a cock or valve, 11^d, and to a pipe, 11^e, leading to the mixing and discharge pipe line, 7, which, as in the previous instances, is controlled by a cock or valve, 7^a, and terminates in a spraying nozzle, 7^b. The storage tank is connected, near its lower end, with the pipe line, 7, through a pipe, 12, and indicator or sight gage, 12^a, controlled by a cock or valve, 12^b.

When a cleansing liquid or solution of greater specific gravity than that of water is supplied to the tank, and is to be used, the valves, 5^a, 11^a, 11^d, and 12^b, are opened, and the valves, 6^a, and 8^b, closed. The cleansing liquid or solution is then discharged, by fluid pressure through the pipe, 12, and sight gage, 12^a, into the pipe line, 7, where it is mixed with water from the supply pipe, 5, and the mixture is discharged from the spraying nozzle, 7^b, as in the instances before described.

When a cleansing liquid or solution of lesser specific gravity than that of water is used, as, for example, oil or an oily mixture, the valves, 5^a, 6^a, and 8^b, are opened, and the valves, 11^d, and 12^b, are closed. The pressure on the liquid in the tank is then equalized, as in the operation of the apparatus first described, and the cleansing liquid or solution is discharged from the tank into the pipe line, 7, in which it is mixed with the water from the supply pipe, 5, and the mixture is discharged through the spraying nozzle, 7^b.

As before stated we have discovered that by admitting to the stream of oil and water passing through the pipe 7 a stream of air under high velocity the oil may be broken up into extremely minute particles. The stream now consisting of water carrying in suspension the extremely fine particles of oil and air may be caused to impinge against the surface to be cleaned. In the form of apparatus specifically claimed herein the air under high velocity is admitted to the stream of water carrying the oil, intermediate the point where the oil is fed to the water and the ejectment point, by an ejector of suitable form, such as that shown in Fig. 2. It is believed that by admitting the air under high velocity to the mixture of oil and water the oil contained or carried in the water is so finely subdivided as to take the colloidal condition, and owing to the excess of water and to the velocity of the stream the oil remains as a colloidal suspension. As is known matter in this colloidal condition possesses great energy of molecular attraction and particularly possesses the power when brought into contact with particles of foreign matter of uniting with the particles of foreign matter as a nucleus forming new combinations therewith. The colloids of hydrocarbons possess this molecular attraction to a high degree and also in this state have a tendency to condense or coagulate. In or-

der, however, to insure this condensation or coagulation there must be a nucleus of foreign matter or an electrical ion as the center of condensation or coagulation. When, therefore, the stream carrying oil in colloidal suspension is carried against the surface to be cleansed with sufficient velocity to prevent the colloids from uniting with each other, the colloids unite with the foreign matters upon the surface and form new combinations therewith so that the foreign matters are rapidly removed from the surface.

It will be seen that our invention may be practised, according to the character of the cleansing liquid which is applied, by the use of the apparatus shown in Fig. 1, or, regardless of the character of the liquid, by the use of that shown in Fig. 3. It will also be obvious to those familiar with the operation of railroad round houses and car cleaning stations, that a material economy of time and labor is effected by our system of cleaning locomotives and other railroad rolling stock, as compared with the ordinary practice of hand wiping, as well as that parts which are comparatively inaccessible in such practice may be readily reached, and the cleaning of a locomotive or other vehicle be thoroughly and promptly accomplished.

We claim as our invention and desire to secure by Letters Patent:

1. In an apparatus of the class described, the combination of a water supply pipe, means for feeding a cleansing liquid in predetermined quantities to the water in said pipe, means intermediate the point at which the cleansing liquid is fed to said pipe and the point of discharge for breaking up the cleansing liquid into extremely minute particles while said liquid is being carried in the water, and means for discharging the stream of water containing the cleansing liquid in this condition against a surface to be cleaned.

2. In an apparatus of the class described, an oil supply, a water supply, means for feeding oil in predetermined quantities into the water supply, means for breaking up the oil into extremely minute particles while it is carried by the water, and for delivering the stream containing the oil in this condition against a surface to be cleaned, said means being located at a point remote from the point of delivery.

3. The combination in an apparatus for applying cleansing liquids of a storage tank, a water supply pipe, valve controlled means for admitting water therefrom to either end of the storage tank, a mixing and discharge pipe, valve controlled means for delivering liquid from either end of the storage tank to the mixing and discharge pipe, a nozzle connected to the outlet of said pipe, and means for admitting air under pressure to the nozzle.

GEORGE DURHAM.
CHARLES W. McGUIRK.

Witnesses:
S. S. RIEGEL,
HARRY A. HARPER.