July 13, 1965 C. T. WALTER 3,194,199

CAN END UNPACKAGING SYSTEM

Filed March 28, 1963 8 Sheets-Sheet 1

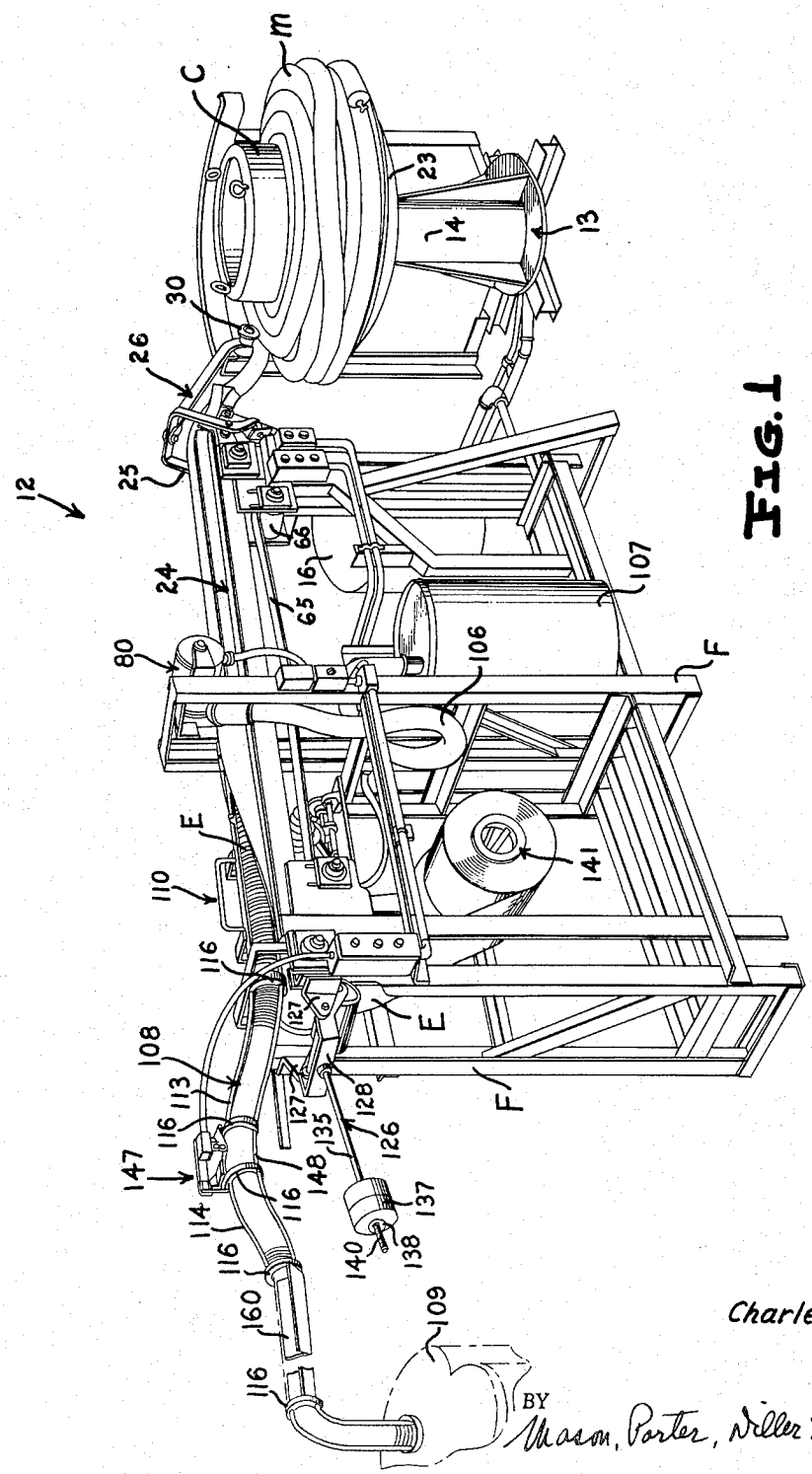

FIG. 1

INVENTOR
Charles T. Walter

BY Mason, Porter, Miller & Stewart
ATTORNEYS

July 13, 1965 C. T. WALTER 3,194,199

CAN END UNPACKAGING SYSTEM

Filed March 28, 1963 8 Sheets-Sheet 2

FIG. 1A

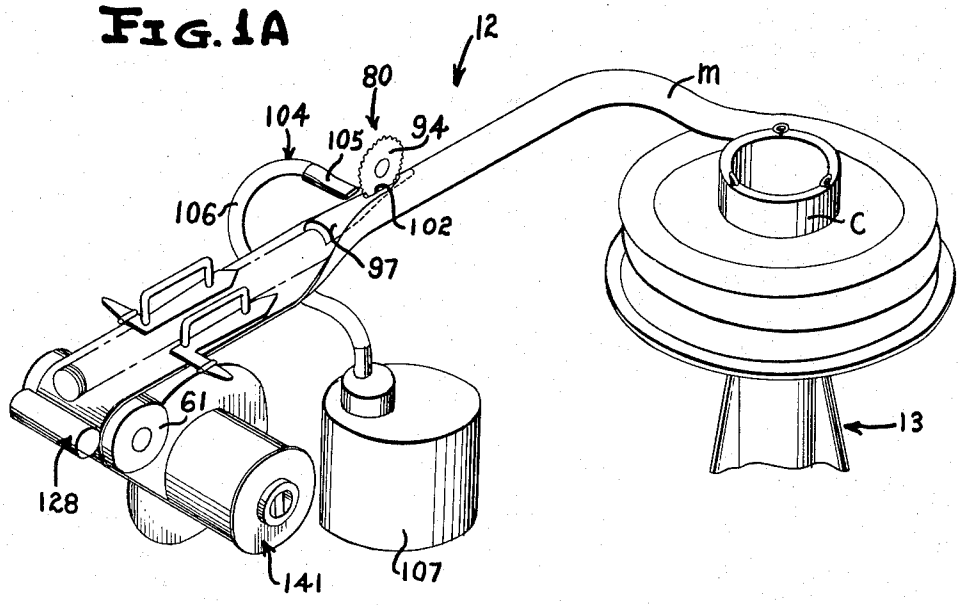

FIG. 5

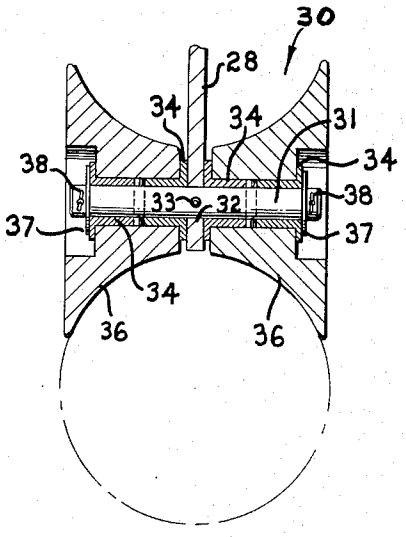

FIG. 6

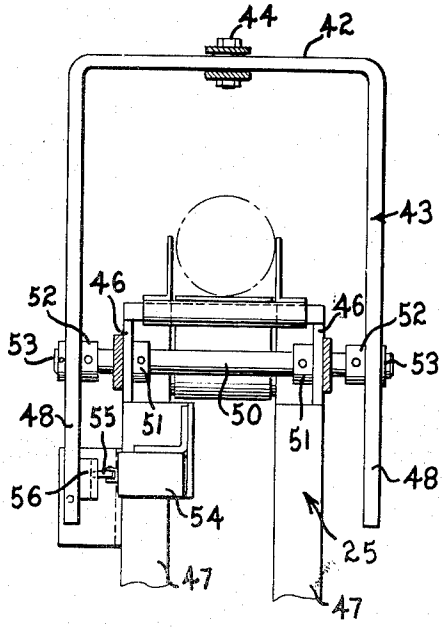

INVENTOR

Charles T. Walter

BY

Mason, Porter, Miller & Stewart

ATTORNEYS

July 13, 1965 C. T. WALTER 3,194,199

CAN END UNPACKAGING SYSTEM

Filed March 28, 1963

8 Sheets-Sheet 3

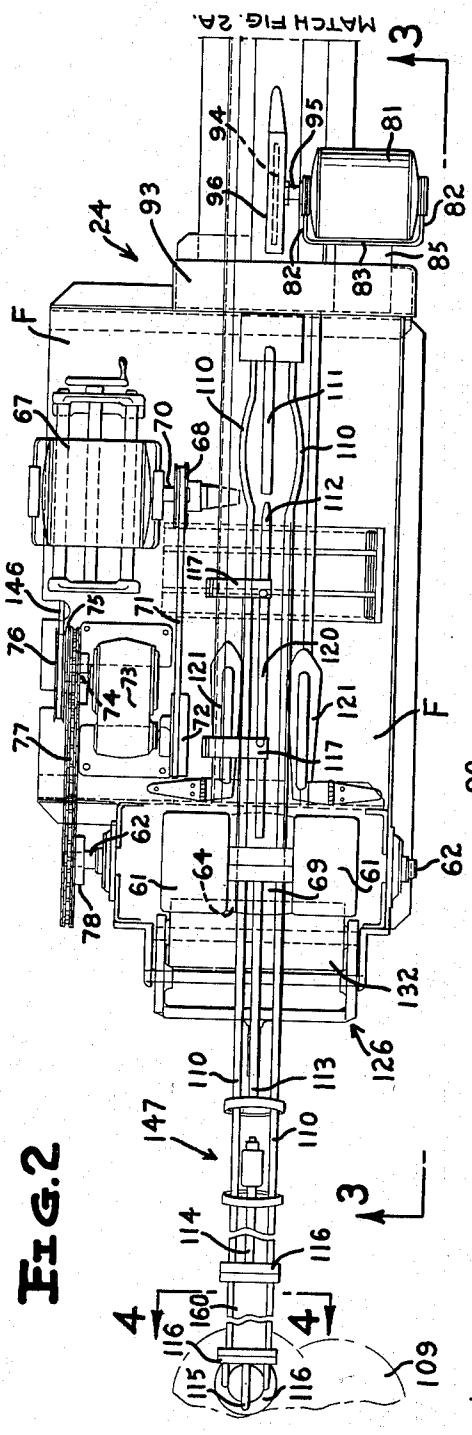

FIG. 2

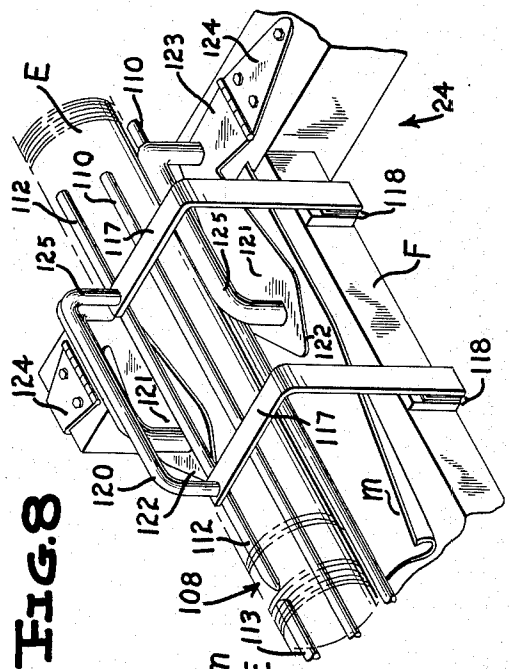

FIG. 8

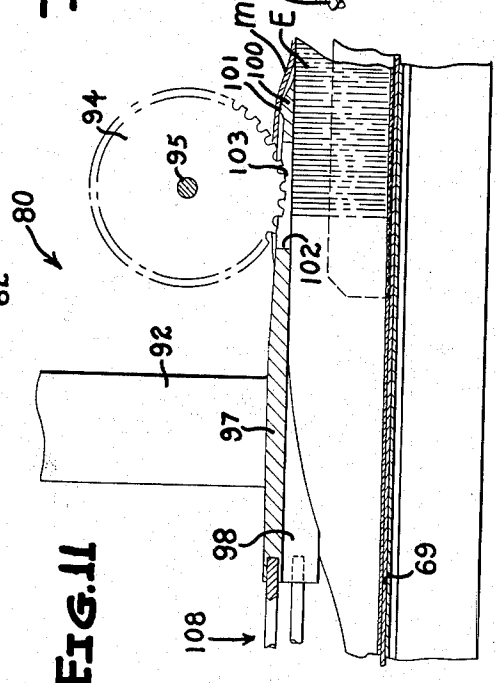

FIG. 11

INVENTOR.
Charles T. Walter

BY

Mason, Porter, Diller & Stewart
ATTORNEYS

July 13, 1965 C. T. WALTER 3,194,199

CAN END UNPACKAGING SYSTEM

Filed March 28, 1963 8 Sheets-Sheet 4

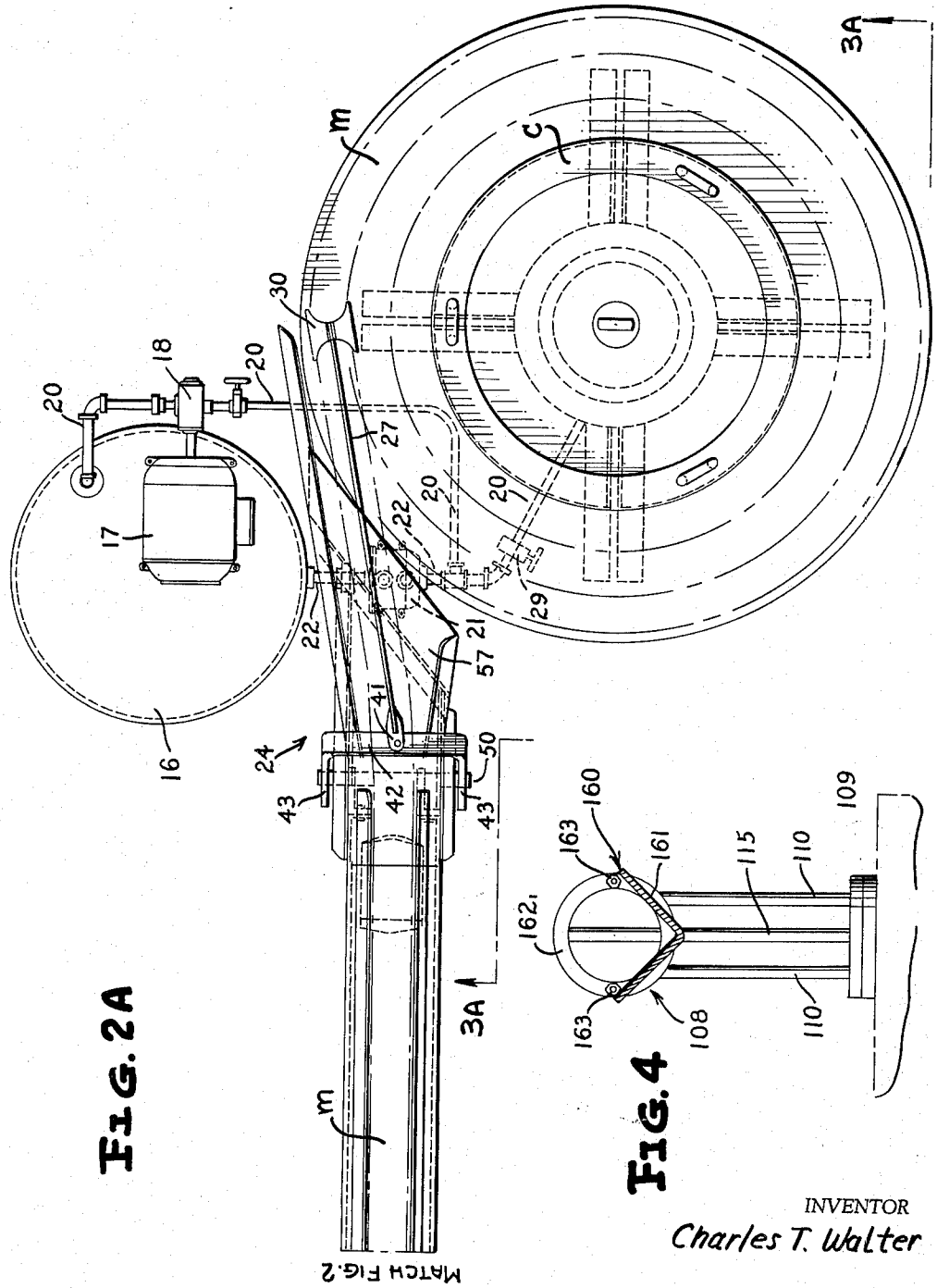

FIG. 2A

FIG. 4

INVENTOR
Charles T. Walter

BY
Mason, Porter, Diller & Stewart
ATTORNEYS

July 13, 1965 C. T. WALTER 3,194,199

CAN END UNPACKAGING SYSTEM

Filed March 28, 1963 8 Sheets-Sheet 5

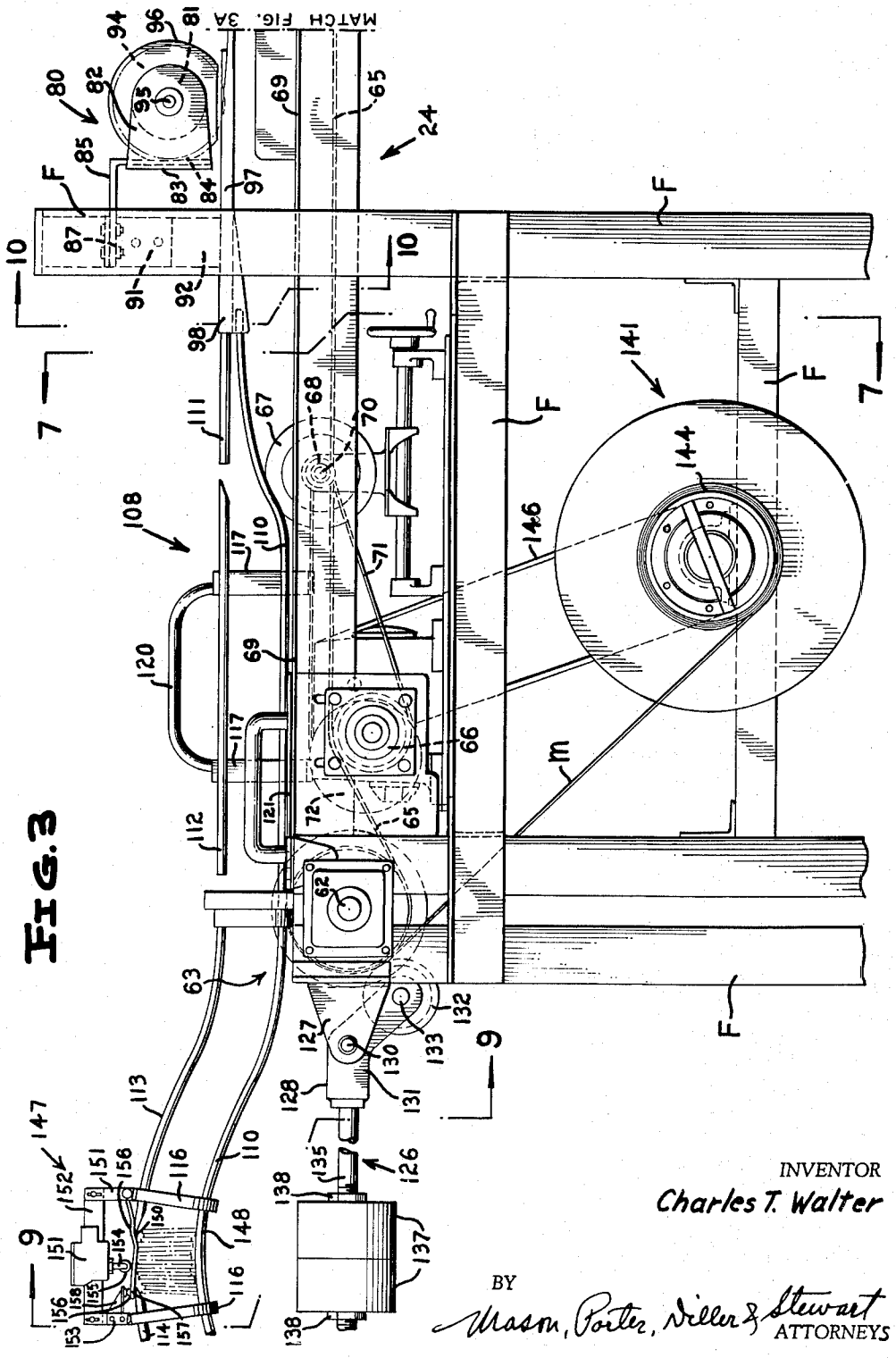

Fig. 3

INVENTOR
Charles T. Walter

BY
Mason, Porter, Diller & Stewart
ATTORNEYS

July 13, 1965 C. T. WALTER 3,194,199

CAN END UNPACKAGING SYSTEM

Filed March 28, 1963 8 Sheets-Sheet 6

FIG. 3A

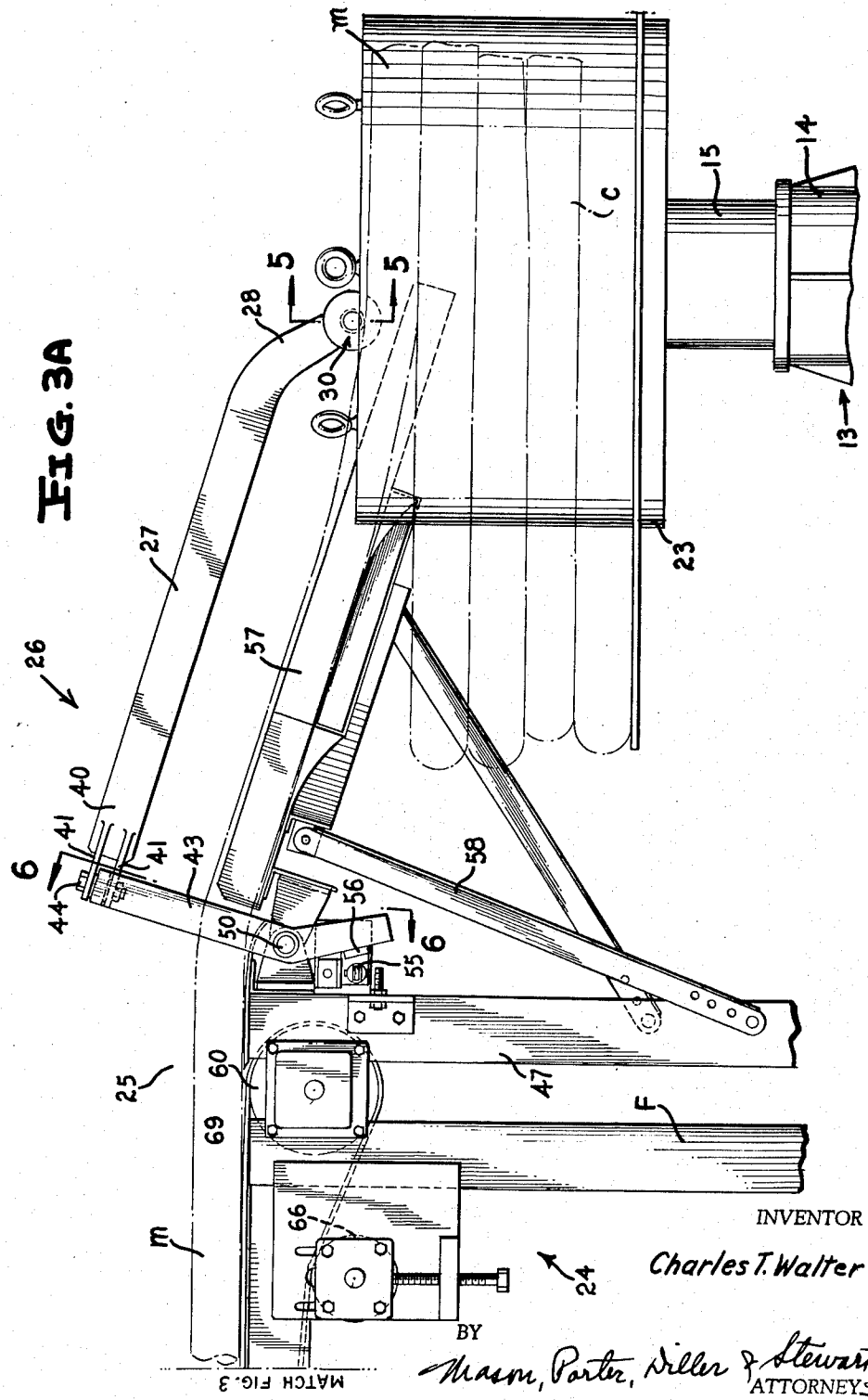

INVENTOR

Charles T. Walter

BY

Mason, Porter, Diller & Stewart

ATTORNEYS

July 13, 1965 C. T. WALTER 3,194,199

CAN END UNPACKAGING SYSTEM

Filed March 28, 1963 8 Sheets-Sheet 7

FIG. 7

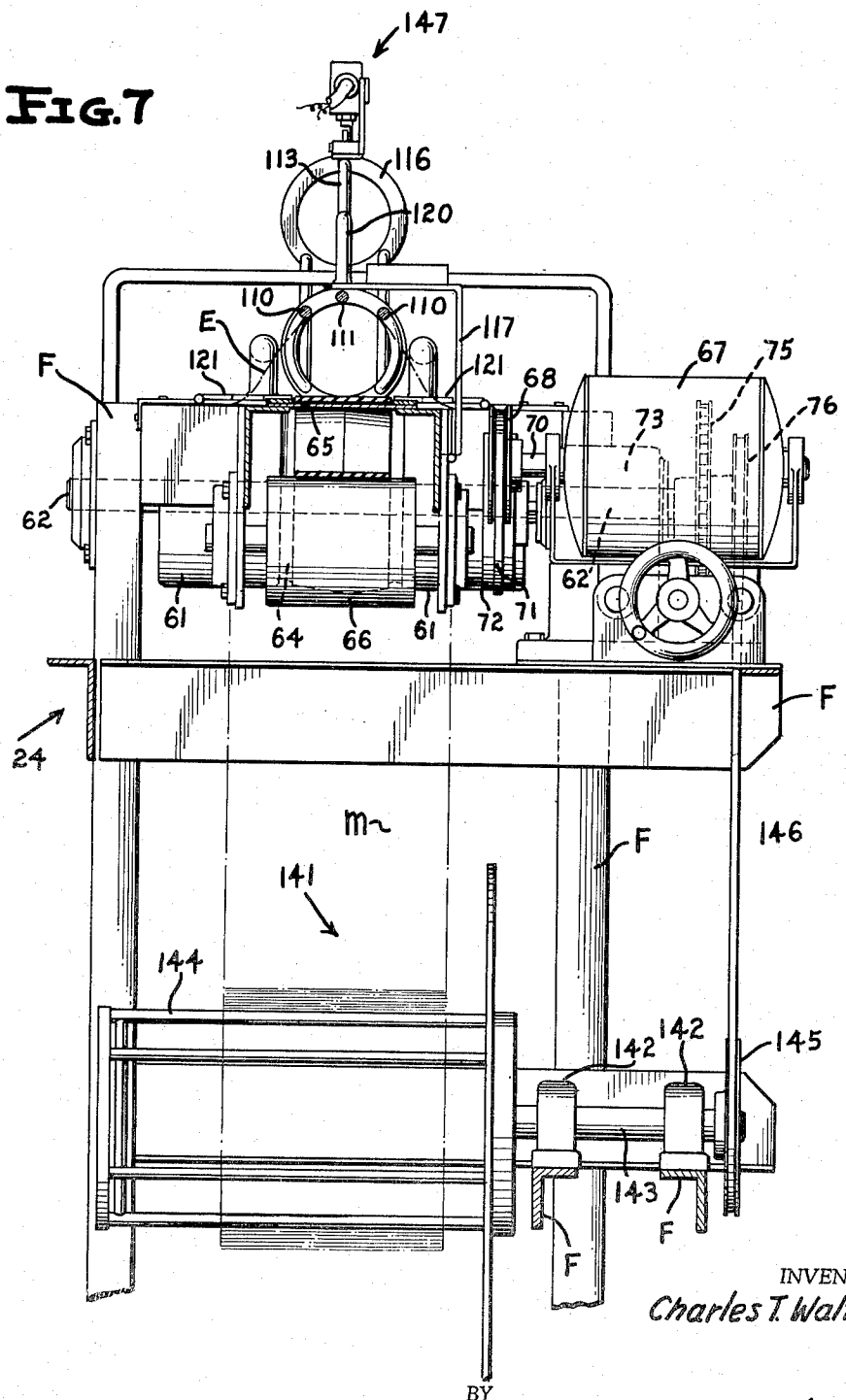

INVENTOR
Charles T. Walter

BY
Mason, Porter, Miller & Stewart
ATTORNEYS

July 13, 1965 C. T. WALTER 3,194,199

CAN END UNPACKAGING SYSTEM

Filed March 28, 1963 8 Sheets-Sheet 8

FIG. 9

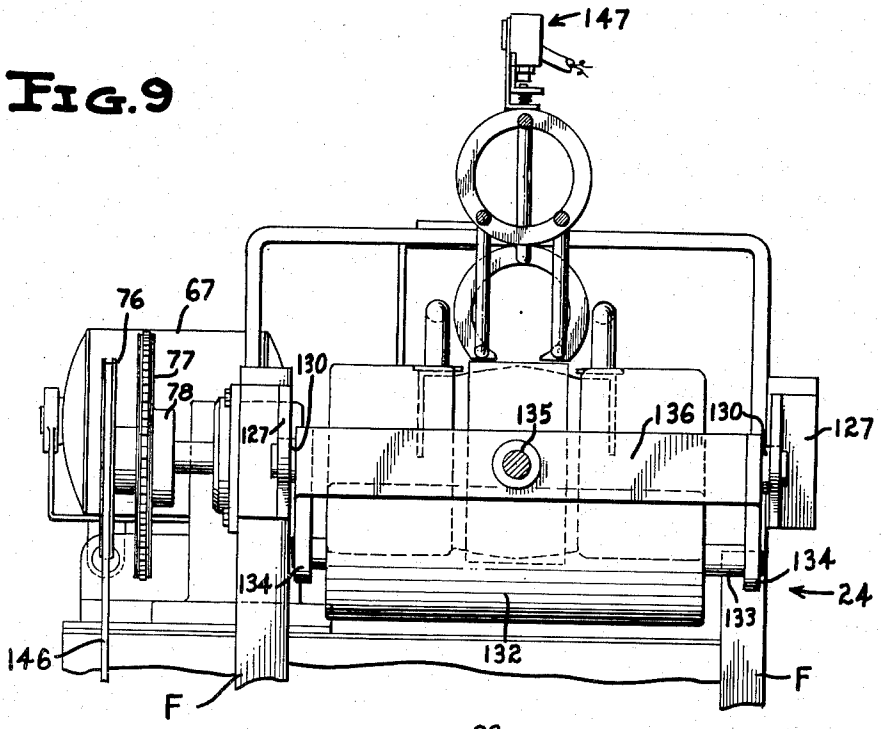

FIG. 10

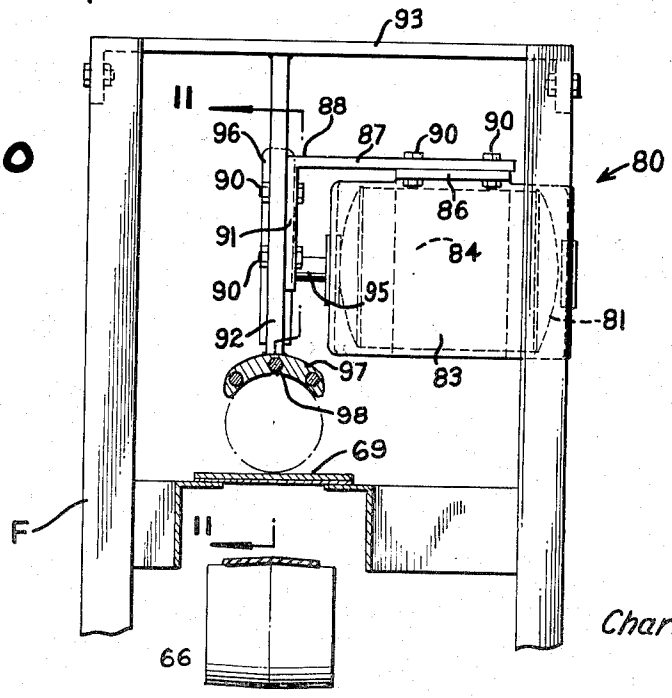

INVENTOR
Charles T. Walter

BY
Mason, Porter, Diller & Stewart
ATTORNEYS

United States Patent Office 3,194,199
Patented July 13, 1965

3,194,199

CAN END UNPACKAGING SYSTEM

Charles T. Walter, Lemont, Ill., assignor to Continental Can Company, Inc., New York, N.Y., a corporation of New York

Filed Mar. 28, 1963, Ser. No. 268,635
25 Claims. (Cl. 113—113)

This invention relates to a novel apparatus for removing an elongated, tubular, flexible, paperstock member from about a plurality of encased can ends arranged in face-to-face relationship preparatory to feeding the can ends to a closing machine.

At present, can ends are packaged in paper bags of a length of about two to three feet. The completed can ends are stacked at a rate of about one inch per second, and when the stack of completed can ends has grown sufficiently to at least fill a bag, an operator removes a predetermined length of the can ends from the stack. The removed can ends are then placed in a jig for insertion into a paper bag, after which the bag is sealed, placed into a large carton, and shipped to a customer's plant.

At the customer's plant, the carton is placed adjacent a can seaming or closing machine and the individual bags of can ends are unloaded from the cartons. Each of the bags is then opened and the can ends are then deposited on a can end feed chute of the can closing machine. The can closing machine uses up can ends at a rate of about 1" per second. A can closing machine operating at the rate of 1" per second uses up a 3' length of can ends in approximately 36 seconds. Thus, it will be appreciated that the feeding of the can ends to a can closing machine is a laborious, time-consuming and expensive operation.

An object of this invention is the provision of a novel can end unpackaging apparatus constructed to substantially eliminate the time and labor involved in the above-mentioned practice of unloading can ends from individual paper bags and feeding the can ends to a can closing machine.

Another object of this invention is to provide a novel can end unpackaging apparatus including a conveyor mechanism for transporting a plurality of can ends arranged in face-to-face relationship and encased in a flexible, tubular member from a feeding mechanism about which the tubular, flexible member is coiled to a can closing machine, and a severing mechanism located adjacent the conveyor mechanism for progressively severing the tubular, flexible member as the same is being transported by the conveyor mechanism to expose the plurality of can ends.

A further object of this invention is the provision of a novel apparatus for unpackaging a plurality of can ends encased in a flexible, tubular member by transporting the encased can ends on a conveyor belt, a rotatable cutting blade being positioned above the conveyor belt for progressively, linearly slitting the flexible tubular member, a pair of shoes overlying the conveyor belt for guiding adjacent severed portions of the flexible, tubular member into a common plane and a wind-up reel or spool for removing and winding thereabout the severed, tubular, flexible member to completely expose the plurality of can ends.

Still another object of this invention is the provision of a can end unpackaging apparatus of the type including a conveyor belt for transporting an elongated, tubular, flexible, can end encasing member along a predetermined path, a rotatable cutting blade arranged above the predetermined path for progressively and linearly slitting the tubular, flexible member, and in addition, to provide a slotted shoe cooperative with the rotatable cutting blade for lifting portions of the tubular, flexible member toward the cutting blade and away from the peripheral edges of

the plurality of can ends whereby the tubular, flexible member is linearly slit while the peripheral edges of the can ends are maintained in non-interfering relationship with respect to the rotating blade.

Still another object of this invention is the provision of a novel can end unpackaging apparatus having a conveyor belt, a vertically movable and rotatable feeding mechanism adjacent an input end of the conveyor belt, a regulating mechanism for maintaining the feeding device in a particular spaced relationship with respect to the conveyor belt, a rotating cutter blade positioned along the conveyor belt for severing a tubular, flexible member encasing a plurality of can ends, and a mechanism adjacent an output end of the conveyor belt for removing the severed tubular, flexible member and completely exposing the plurality of can ends thereby unpackaging the same.

Another object of this invention is to provide a novel can end unpackaging apparatus of the type immediately described above wherein an open guide is arranged between the output end of the conveyor and a can closing machine, a detecting device positioned along the open guide being operable by the plurality of can ends to indicate the sufficiency or insufficiency of can ends being fed to the can closing machine, and a drive mechanism for the conveyor belt operably connected to the detecting device whereby the conveyor belt is advanced upon an indication from the detecting device that an insufficient amount of can ends are being unpackaged, while additionally permitting the conveyor belt to be stopped upon another indication of the detecting device that a sufficient amount of can ends are being fed.

Another object of this invention is the provision of a novel can end unpackaging apparatus constructed in accordance with the above-mentioned objects and provided with a pressure roll mechanism cooperative with the output end of the conveyor belt to grip the severed flexible member and provide tensioned winding thereof, and an exhausting device positioned adjacent the rotating cutting blade for removing cutting dust as the flexible tubular member is severed.

Another object of this invention is to provide a novel method of unpackaging a plurality of can ends encased in a tubular flexible member by transporting the plurality of encased can ends, continuously linearly severing the tubular member and separating the flexible, tubular member from the plurality of can ends.

With the above and other objects in view that will hereinafter appear, the nature of the invention will be more clearly understood by reference to the following detailed description, the appended claims and the several views illustrated in the accompanying drawings.

In the drawings:

FIGURE 1 is a side perspective view of a can end unpackaging apparatus constructed in accordance with this invention, and illustrates a flexible, tubular can end encasing package coiled about a vertically movable feeding mechanism, a conveyor belt transporting the plurality of encased can ends to a severing mechanism, and subsequently transporting the plurality of can ends to a can closing machine after the severed flexible member has ben completely removed and wound about a tension wind-up spool or reel.

FIGURE 1A is a schematic top perspective view of the can end unpackaging apparatus of FIGURE 1, and shows a rotating cutting blade cooperative with a slotted plow, an exhausting mechanism for removing cutting dust as the flexible tubular member is linearly slit, and a pair of hinged plows overlying the severed portions of the flexible member and guiding the same into a common plane.

FIGURE 2 is a top plan view of a left-hand portion of the can end unpackaging apparatus of FIGURE 1.

FIGURE 2A is a top plan view similar to FIGURE 2

of a right-hand extension of the can end unpackaging apparatus of FIGURE 2, and shows a pivotable regulating arm journaled to an output end of the conveyor and an opposite end thereof overlying a portion of a vertically adjustable and freely rotatable turntable.

FIGURE 3 is an enlarged fragmentary elevational view taken along line 3—3 of FIGURE 2, and more clearly shows the left-hand portion of the can end unpackaging apparatus.

FIGURE 3A is an enlarged fragmentary elevational view taken along the line 3A—3A of FIGURE 2A, and illustrates the right-hand portion of the can end unpackaging apparatus.

FIGURE 4 is an enlarged fragmentary transverse sectional view taken along line 4—4 of FIGURE 2, and illustrates a section of an open guide between an output end of the conveyor and a can closing machine.

FIGURE 5 is an enlarged fragmentary transverse sectional view taken along line 5—5 of FIGURE 3A, and shows a roller freely journaled on an end portion of a regulating arm forming a portion of a regulating mechanism for maintaining a proper relationship between the input end of the conveyor and the vertically movable turntable.

FIGURE 6 is an enlarged fragmentary transverse sectional view taken along line 6—6 of FIGURE 3A, and illustrates a second end portion of the regulating arm pivotally journaled to the input end of the conveyor.

FIGURE 7 is an enlarged fragmentary vertical jump section taken along line 7—7 of FIGURE 3, and shows a section of the open guide that is swingable to a non-use position and a hinged guide on each side of the conveyor belt for directing adjacent severed portions of the tubular, flexible member into a common plane.

FIGURE 8 is a fragmentary top perspective view of the swingable portion of the open guide and the pair of guiding means or shoes on each side of the conveyor belt.

FIGURE 9 is a fragmentary enlarged jump sectional view taken along the line 9—9 of FIGURE 3, and shows more clearly the left-hand end portion of the can end unpackaging apparatus.

FIGURE 10 is an enlarged fragmentary jump sectional view taken along line 10—10 of FIGURE 3, and illustrates the relationship between the rotating cutting blade, the slotted plow and the conveyor belt.

FIGURE 11 is a vertical sectional view taken along line 11—11 of FIGURE 10, and illustrates a tapered end portion of the slotted plow lifting the flexible tubular member away from the peripheral edges of a plurality of can ends and the rotatable cutting blade severing the tubular flexible member.

A can end unpackaging apparatus constructed in accordance with this invention is best illustrated in FIGURES 1 through 3A, and is generally designated by the reference numeral 12. The can end unpackaging apparatus 12 includes a vertically movable and freely rotatable feed mechanism 13. A container C is supported by the feed mechanism 13 and has coiled thereabout an elongated, flexible, tubular member M which encases a plurality of can ends E in face-to-face relationship. The container C and the tubular can end encasing member M form no part of this invention. However, it should be noted that the tubular can end encasing member M is constructed of a material which is sufficiently flexible to allow the tubular can end encasing member M to be coiled about the container C without the flexible material being ruptured. Preferably, the tubular can end encasing member M is constructed from paperstock material such as crepe paper.

The feed mechanism 13 is best illustrated in FIGURES 2A and 3A, and includes an outer cylinder 14 and an inner cylinder 15 telescoped therein. The inner cylindrical member 15 is raised with respect to the outer cylindrical member 14 by supplying fluid from a hydraulic fluid reservoir 16 by an electric motor 17 operating a

hydraulic pump 18 and a high pressure fluid supply line 20 in fluid communication with the interior of the outer cylindrical member 14. An electrically actuated control valve 21 in a return line 22 is operated by a regulating device which will hereafter be described. When the control valve 21 is open, hydraulic fluid may be selectively returned from the hydraulic feed mechanism 13 via a check valve 29 in the line 20 which has an integral controllable by-pass, through the return line 22 to the fluid reservoir 16, due to the weight of the inner cylinder 15 of the hydraulic feed mechanism 13. When the control valve 21 is closed, hydraulic fluid is communicated from the fluid reservoir 16 through the high pressure supply line 20 and check valve 29 to the hydraulic feed mechanism 13. The check valve 29 allows free flow of fluid into the cylindrical member 14, but prevents the return of the fluid to the reservoir so as to prevent the lowering of the inner cylindrical member 15 when the valve 21 is open. The machine operator can effect the lowering of the cylindrical member 15 whenever the valve 21 is open by manually opening the normally closed by-pass of the check valve 29.

Due to the small volume rate of flow of the pump 18 and the larger size of the return line 22 as compared to the high pressure fluid supply line 20, the pump 18 may be run continuously so that when the control valve 21 is opened the fluid from the pump 18 immediately returns to the fluid reservoir 16.

A turntable 23 is freely rotatably mounted on a top portion of the inner cylinder 15 of the hydraulic feed mechanism 13 by means of ball bearings (not shown) or other such anti-friction devices.

As is clearly illustrated in FIGURES 1, 2A and 3A, of the drawings, the hydraulic feed mechanism 13 is located adjacent an input end 25 of a conveyor 24. The height of the freely rotatable and vertically movable turntable 23 with respect to the input end 25 of the conveyor 24 is regulated by a level regulating mechanism 26. The level regulating mechanism 26 includes an arm 27 having an end portion 28 overlying the turntable 23. An hourglass roller 30 is journaled to the end portion 28 of the arm 27 by means of a shaft 31 passed through an aperture 32 in the end portion 28 of the arm 27, as shown in FIGURE 5. A transverse pin 33 secures the shaft 31 to the end portion 28 of the arm 27. The hour-glass configuration of the hourglass roller 30 is formed by a pair of identical frusto-conical rollers 36 each having a pair of press fitted bushings 34 and which are arranged in opposed relationship to each other and freely rotatably mounted on the shaft 31. An identical washer and cotter pin, 37 and 38 respectively, retain the frusto-conical rollers 36 upon the shaft 31 in a manner clearly shown in FIGURE 5 of the drawings.

A second end portion 40 of the arm 27 is provided with a pair of identical, spaced, apertured ears 41. With particular attention directed to FIGURES 3A and 6 of the drawings, the spaced ears 41 receive therebetween a bight portion 42 of a substantially U-shaped inverted member 43. A bolt 44 passed through the apertured ears 41 and the bight portion 42 of the inverted U-shaped member 43 pivotally attaches the arm 27 to the inverted U-shaped member 43. The inverted U-shaped member 43 is pivotally attached to the input end 25 of the conveyor 24 by means of a bracket 46 attached to each one of a respective pair of support legs 47 forming a part of the conveyor 24. Each of two depending legs 48 of the inverted U-shaped member 43 is apertured to receive a shaft 50 which is retained in apertures in the brackets 46 by a collar 51. A collar 52 on each end of the shaft 50 cooperates with a collar 53 on each end of the shaft 50 to retain the inverted U-shaped member 43 pivotally mounted on the input end 25 of the conveyor 24.

A microswitch 54 is attached to the leftmost leg 47 of the conveyor 24, as viewed in FIGURE 6 and includes a movable switch operating cam roller 55. A camming

member 56 is secured to an inner face of the left leg 48 of the inverted, U-shaped member 43, as is clearly illustrated in FIGURE 6 of the drawings. The camming member 56 is in pivotable alignment with the cam roller 55 of the microswitch 54. The microswitch 54 is connected to the control valve 21 of FIGURE 2A. As the can end encasing member M is drawn off the container C supported by the turntable 23, the height of the coil decreases and the regulating arm 27 of the regulating mechanism 26 pivots downwardly in a clockwise direction about the shaft 50. When the regulating arm 27 has pivoted a preselected distance, the camming member 56 secured thereto actuates the microswitch 54 by contacting and moving the switch operating cam roller 55 thereof. The actuation of the microswitch 54 causes the control valve 21 to close. As has been heretofore noted, the closing of the control valve 21 causes hydraulic fluid to be pumped from the fluid reservoir 16 through the high pressure conduit 20 and check valve 29 into the feed mechanism 13. In this manner, the inner cylindrical member 15 is telescoped vertically upwardly with respect to the outer cylindrical member 14 of the feeding mechanism 13 until the microswitch is again permitted to return to its original position by the retraction of the camming member 56 away from the cam roller 55 which causes the control valve 21 to again open.

The by-pass of the check valve 29 will be closed during operation of the apparatus 12 so that when the valve 21 is opened the check valve 29 prevents the return of fluid from cylindrical member 14 to the reservoir 16 and the height attained by the inner cylindrical member 15 at the instant the valve 21 is opened will be maintained. The height of the can end encasing member M coiled about the container C is thus continuously and automatically maintained at a desired level with respect to the input end 25 of the conveyor mechanism 24.

The regulation of the level of the feed mechanism 13 with respect to the input end 25 of the conveyor 24 by the regulating mechanism 26 prevents the rupture of the can end encasing member M which would otherwise occur. That is, because the can end encasing member M is constructed of flexible crepe paper or any such other similar paper product, the crepe paper would rupture if the can end encasing member M were abruptly bent during the feeding thereof. For example, if the lowermost coil of the can end encasing member M supported on the turntable 23 of FIGURE 3A was to be fed to the conveyor 24 from the position illustrated, the can end encasing member M would be severely bent at the input end 25 of the conveyor 24. This bending of the can end encasing member M would cause the rupture of the same.

A guide chute 57 is adjustably secured by a pair of bracket arms 58 between the feed mechanism 13 and the input end 25 of the conveyor 24 to further assure gradual bending of the can end encasing member M as the same is being fed to the conveyor mechanism 24.

The conveyor mechanism 24 includes a supporting framework F. An idler roll 60 is suitably journaled to the framework F of the conveyor mechanism 24 at the input end 25 thereof, while a drive roll 61 is journaled by means of a shaft 62 to an output end 63 of the conveyor mechanism 24. A central section 64 of the driven roll 61 is reduced in diameter and convexly curved for the purpose of maintaining a conveyor belt centered thereon in accordance with conventional practice.

A conveyor belt 65 is entrained about the rolls 60 and 61 and establishes a predetermined path of travel for the can end encasing member M extending from the input end 25 of the conveyor mechanism 24 to the output end 63 of the conveyor mechanism 24. A pair of identical, adjustable idle rolls 66 are secured to the framework F to vary the tension in the conveyor belt 65 in a manner clearly shown in FIGURES 3 and 3A of the drawings.

The drive roll 61 is driven by a motor 67 in a manner best illustrated in FIGURE 2 of the drawings. The motor 67 is adjustably mounted on the framework F of the conveyor mechanism 24, and includes a pulley 68 secured to an output shaft 70 of the motor 67. A pulley belt 71 is entrained over the drive pulley 68 of the motor 67 and about a pulley 72 of a speed reducer 73. An output shaft 74 of the speed reducer 73 is provided with a sprocket 75 and a pulley 76. A drive chain 77 is entrained about the sprocket 75 of the speed reducer 73, and also about a drive sprocket 78 secured to the shaft 62 of the drive roll 61.

With particular attention directed to FIGURES 3, 10 and 11 of the drawings, a severing mechanism 80 is secured to the framework F of the conveyor mechanism 24 between the respective input and output ends 25 and 63 of the conveyor mechanism 24, and in vertical spaced relation to an upper conveyor belt run 69 of the conveyor belt 65, as is best illustrated in FIGURE 10 of the drawings. The severing mechanism 80 includes a motor 81 secured above the upper run 69 of the conveyor belt 65 by means of a U-shaped mounting bracket 82, a bight portion 83 of which is welded or otherwise secured to a leg 84 of an L-shaped member 85. A second leg 86 of the L-shaped member 85 is secured to a first leg 87 of a second L-shaped member 88 by means of a plurality of nuts and bolts 90 in a manner clearly shown in FIGURE 10 of the drawings. A second leg 91 of the second L-shaped member 88 is secured by a plurality of identical nuts and bolts 90 to a vertically depending support arm 92. The support arm 92 is welded or otherwise attached to a bridging member 93 of the framework F. A cutting blade 94 is secured to a shaft 95 of the motor 81, and is preferably enclosed in a protective housing 96. As is best illustrated in FIGURE 11 of the drawings, the cutting blade 94 is supported slightly above the peripheral edges of the plurality of can ends E transported by the upper conveyor belt run 69 of the conveyor belt 65.

Furthermore, as is also illustrated in FIGURE 11, the depending support arm 92 is secured at a lower end portion thereof to a tapered plow 97. The plow 97 includes a downwardly opening concave trailing end portion 98 which tapers forwardly into a substantially narrow, pointed leading end portion 100. The pointed leading end portion 100 of the plow 97 includes a shoulder 101 and an elongated slot 102. The pointed leading end 101 of the plow 97 is positioned closely above the peripheral edges of the plurality of can ends E and is effective to cause the flexible can end encasing member M to be peeled away from the peripheral edge portions of the plurality of can ends E, in a manner clearly illustrated in FIGURE 11. Because the cutting blade 94 is positioned with a peripheral cutting edge portion 103 thereof in the elongated slot 102 of the plow 97, the tubular can end encasing member M is longitudinally severed or slit while being transported by the upper conveyor belt run 69 while the peripheral edge portions of the plurality of can ends E are precluded from being cut or abraded by the cutting edge portion 103 of the cutting blade 94.

An exhausting or vacuuming device 104 is located adjacent the severing mechanism 80 by a suitable support bracket (not shown). The vacuuming device 104 includes a nozzle 105 located close the cutting blade 94 and the elongated slot 102. A flexible hose 106 conducts paper cutting dust from the severed can end encasing member M to a tank 107.

An open guide member 108 extends between the trailing end portion 98 of the plow 97 and a can closing machine 109. The open guide 108 includes a pair of lower, cylindrical, elongated rods 110 and a plurality of upper aligned rod sections 111 through 115. The elongated rods 110 and the plurality of rod sections 111–115 are arranged to confine and guide the plurality of can ends E from the trailing end portion 98 of the plow 97 to the can closing machine 109. The elongated members

110 and the plurality of rod sections 111–115 are maintained in spaced relation by a plurality of identical O-ring spacers 116, as is best illustrated in FIGURE 1 of the drawings.

The rod section 112 shown in FIGURES 3 and 8 of the drawings is welded or otherwise secured to a pair of identical L-shaped brackets 117. Each of the brackets 117 is secured to the framework F of the conveyor mechanism 24 by an associated hinge 118. By grasping a handle 120 secured between the members 117, the rod section 112 can be hinged or pivoted to an out-of-the-way position for a purpose to be hereafter described.

Illustrated in FIGURES 2, 3, 7 and 8 is a guide shoe 121 adjacent each marginal edge of the upper conveyor belt run 69. Each of the guiding shoes 121 includes a flat, tapered, leading edge portion 122 and an offset trailing end portion 123. Each of the trailing offset end portions 123 includes a hinge section 124 secured to the framework F of the conveyor mechanism 24. A handle 125 is provided on each of the guide shoes 121 whereby the same may be grasped to hinge the guide shoes 121 to an out-of-the-way position for a purpose to be described hereafter. The purpose and function of the guide shoes 121 are to guide the severed tubular can end encasing member M into a common plane as the plurality of can ends E are being transported by the upper conveyor belt run 69 in the manner clearly shown in FIGURES 7 and 8 of the drawings.

At the output end 63 of the conveyor mechanism 24 is located a pressure roll mechanism 126 which will be best described and understood by referring to FIGURES 3 and 9 of the drawings. The pressure roll mechanism 126 is secured to the framework F of the conveyor mechanism 24 by means of identical ears 127 projecting outwardly and secured to the framework F of the conveyor mechanism 24. A yoke 128 is journaled between the projecting ears 127 by a pair of identical trunnions 130 in each one of a pair of legs 131 of the yoke 128. A roller 132 is rotatably mounted by means of a shaft 133 to a lowermost end portion 134 of each of the legs 131 of the yoke 128. An elongated counterbalancing arm 135 is secured to a bight portion 136 of the yoke 128. A plurality of weights 137 are adjustably secured upon the counterbalancing arm 135 by means of a pair of nuts 138, each of which is threaded upon a threaded end portion 140 of the counterbalancing arm 135.

After the can end encasing member M has been longitudinally slit by the severing mechanism 80 and guided into a coplanar condition by the pair of shoes 121, the severed, coplanar can end encasing member M is inserted between the drive roll 61 and the roll 132 of the pressure roll mechanism 126. The roll 132 is preferably constructed of rubber or is provided with a rubber surface which rides against the drive roll 61 through the severed, planar can end encasing member M so that the can end encasing member M is tensioned as the same is being drawn between the rolls 61 and 132.

A wind-up mechanism 141 for winding-up and tensioning the severed, planar can end encasing member M is shown in FIGURES 3 and 7 of the drawings. The wind-up mechanism 141 includes a pair of identical bearing blocks 142 secured to the framework F of the conveyor mechanism 24. A shaft 143 of a wind-up reel 144 is rotatably journaled in the pair of bearing blocks 142. A pulley 145 is secured to the shaft 143. A pulley belt 146 is entrained about the pulley 145, and the pulley 76. The wind-up reel 144 is driven at a constant overspeed by the pulley 76, the pulley belt 146 and the pulley 145 to tension the severed, planar can end encasing member M, and the pulley belt 146 slips to maintain the proper tension in the severed, planar can end encasing member M as the diameter of the can end encasing member M wound upon the wind-up reel 144 increases.

To insure that a proper amount of can ends E are fed to the can closing machine 109, a detecting device 147 shown in FIGURES 1, 3, 7 and 9 is secured to a hump section 148 of the open guide 108 between the rod sections 113 and 114. An opening 150 between the rod sections 113 and 114 permits the plurality of can ends E to rise or "hump up" when a plurality of can ends E are solidly packed along the length of the open guide member 108 to the can closing machine 109. This packed condition of the plurality of can ends E occurs when the rate at which the plurality of can ends E are being fed becomes faster than the rate at which the can closing machine 109 is capable of using up the plurality of can ends E.

A microswitch 151 is secured to an inverted U-shaped bracket member 152 having each of two depending legs 153 secured to a respective one of the O-ring supports 116. The microswitch 151 includes a movable arm 154 having a roller 155 at an end portion thereof. The roller 155 cooperates with a spring biased pivot arm 156 which is pivotally attached to the right leg 153, as viewed in FIGURE 3, of the detecting mechanism 147. A compression spring 159 is mounted between a free end portion 157 of the contact arm 156 and an offset bracket 158 secured to a left leg 153 of the detecting device 147, as shown in FIGURE 3. The microswitch 151 is connected to the motor 67 which drives the conveyor belt 65.

As a plurality of can ends E begins to become solidly packed along the open guide 108, some of the plurality of can ends E hump up in the opening 150 below the microswitch 151 and pivot the contact arm 156 clockwise against the tension in the compression spring 159, thereby causing the switch arm 154 to operate the microswitch 151 and stop the motor 67. The conveyor belt 65 stops until the can closing machine 109 has used up a sufficient amount of the plurality of can ends E to allow the portion thereof in the opening 150 to settle down. As these can ends begin to settle, the compression spring 159 bears against the free end portion 157 of the contact arm 156 and pivots the contact arm 156 in a counterclockwise direction to reposition the microswitch 151 and start the motor 67 to begin the movement of the conveyor belt 65.

To allow the can end unpackaging apparatus 12 to be spaced different distances away from the can closing machine 109, a section 160 of the open guide 108 between the detecting mechanism 147 and the can closing machine 109 is removable. The section 160 comprises a V-shaped trough 161 secured at opposite ends thereof to a respective identical circular member 162. Each of the circular members 162 is apertured in alignment with a pair of apertures (not shown) in each of the O-shaped members 116 in abutment with the circular members 162. A pair of nuts and bolts 163 secure the section 160 in the open guide 108. While only a single removable section 160 is illustrated in the drawings, it is to be understood that a plurality of identical sections may be secured in the open guide 108 depending upon the distance between the can end unpackaging apparatus 12 and the can closing machine 109. Section 160 is open on top which permits manual feeding of can ends to the can closing machine from conventional can end bags in the event repairs are necessary to the can end unpackaging apparatus 12.

The operation of the can end unpackaging apparatus 12 will be best understood by referring to FIGURES 1 through 3 of the drawings to which the attention is now directed.

The can end unpackaging apparatus 12 is first positioned adjacent a can closing machine, such as the can closing machine 109. Any number of removable sections 160 of the open guide 108 found necessary or desirable to facilitate the installation of the can end unpackaging apparatus 12 are used in locating the can end unpackaging apparatus 12 adjacent the can closing machine 109. The hydraulic reservoir 16 is filled with suitable hydraulic fluid and the various electrical components of the can end unpackaging apparatus 12 are connected to a suitable source of electric energy.

A container, such as the container C illustrated in

FIGURE 1, having a plurality of can ends encased in the tubular flexible member M coiled thereabout is positioned on top of the turntable 23 of the feed mechanism 13. With the turntable 23 of the feed mechanism in its lowermost position, an uppermost coil of the tubular can end encasing member M is substantially aligned with the input end 25 of the conveyor mechanism 24. An uppermost end of the coiled can end encasing member M is removed from the container C, placed upon the chute 57, and drawn between the inverted U-shaped member 43 of the regulating mechanism 26 until a substantial portion of the can end encasing member M is resting upon the upper conveyor belt run 69 of the conveyor belt 65. The regulating arm 27 of the regulating device 26 is then positioned so that the hourglass roller 30 thereof is positioned atop the can end encasing member M. A sealed end of the can end encasing member M is opened to allow the pointed end 100 of the plow 97 to enter between the peripheral portions of the plurality of can ends E and the can end encasing member M when the conveyor belt 65 is moving.

The motor 67 is actuated to drive the conveyor belt 65 through the drive roll 61. The upper conveyor belt run 69 transports the can end encasing member M to the severing mechanism 80, as is clearly shown in FIGURE 11 of the drawings, whereat the rotating cutter blade 94 longitudinally slits the can end encasing member M. The vacuuming device 104 of FIGURE 1A removes the cutting dust during the slitting operation and transfers the same through the flexible conduit 106 to the tank 107.

Continued advancement of the conveyor belt 65 moves the severed portion of the can end encasing member into the vicinity of the pair of guide shoes 121 and the hinged rod section 112 (as is best illustrated in FIGURE 8 of the drawings). An operator then pivots each of the shoes 121 from an out-of-the-way position to a position atop the marginal severed edges of the can end encasing member M, as clearly shown in FIGURE 8. The rod section 112 is thereafter pivoted to overlie and guide the plurality of can ends E while the same are being transported along the open guide 108.

At the output end 63 of the conveyor mechanism 24, the can end encasing member M is guided manually between the rolls 61 and 132. Because the wind-up mechanism 141 is slip driven, the same may be stopped by the operator without stopping the drive motor 67, and the severed end of the can end encasing member M is secured to the wind-up reel 144 thereof.

The upper conveyor belt run 69 of the conveyor belt 65 subsequently feeds the plurality of can ends E along the open guide 108, beyond the detecting mechanism 147, and into the can closing machine 109.

The detecting mechanism 147 will stop the motor 67 when a portion of the plurality of can ends E has risen in the hump section 148 of the open guide 108 in the manner heretofore discussed.

Furthermore, as the regulating arm 27 of the regulating mechanism 26 descends during the transportation of the can end encasing member by the conveyor mechanism 24, the microswitch 54 at the input end 25 of the conveyor mechanism 24 is actuated in the manner previously described to vertically raise the inner cylinder 15 of the feed mechanism 13 and thereby prevent the rupture of the can end encasing member M.

Various modifications of the disclosed can end unpackaging apparatus 12 are considered to be within the scope of this invention. For example, the vertically movable feed member 13 can be replaced by a spool-type feed mechanism similar to the types of spools upon which thread or electrical conduit are wound. Also, a fully automatic threading device, such as that employed in automatic winding mechanisms, may be incorporated in the disclosed can end unpackaging apparatus 12 to automatically thread the severed end portion of the can end 126 and onto the wind-up mechanism 141.

While an example disclosure of a can end unpackaging apparatus and the arrangement of the various components thereof is disclosed herein, it is to be understood that changes in the disclosed apparatus and its components may be made without departing from the spirit and scope of this invention, as defined in the appended claims.

I claim:

1. A can end unpackaging apparatus comprising means for feeding a plurality of can ends arranged in face-to-face relationship and encased in an elongated, tubular, flexible member, means for regulating the feeding means, a conveyor mechanism adapted to transport said encased can ends along a predetermined path, means for progressively severing the flexible member as the encased can ends are conveyed along the predetermined path, and means for engaging edges of the can ends and contactingly guiding the plurality of can ends beyond the severing means in face-to-face relationship toward an output end of the conveyor.

2. A can end unpackaging apparatus comprising a vertically movable feeding device adapted to feed a plurality of can ends arranged in face-to-face relationship and encased in an elongated, tubular, flexible member to a conveyor, means for regulating the vertical movement of said feeding device, the conveyor being adapted to transport said encased can ends along a predetermined horizontal path, means for progressively severing the flexible member as the encased ends are conveyed along the predetermined path by the conveyor, means positioned beyond the severing means for removing the severed flexible member from about the encased can ends, and means positioned between at least the severing means and the removing means for guiding the plurality of can ends in unwrapped face-to-face relationship toward an output end of the conveyor.

3. A can end unpackaging apparatus including a conveyor adapted to transport a plurality of can ends arranged in face-to-face relationship in a flexible encasing member along a predetermined path from an input end of the conveyor to an output end of the conveyor, feeding means located adjacent the input end of the conveyor, means for regulating the feeding means to preclude rupture of the flexible encasing member as the encasing member is being fed to and transported by the conveyor along said predetermined path.

4. A can end unpackaging apparatus including a conveyor adapted to transport a plurality of can ends arranged in face-to-face relationship in a flexible encasing member along a predetermined path from an input end of the conveyor to an output end of the conveyor, feeding means located in spaced relation to the input end of the conveyor for feeding the encasing member to the input end of the conveyor, and means for preventing rupture of the flexible encasing member as the encasing member is being transported between the input end of the conveyor and the feeding means.

5. The can unpackaging apparatus as defined in claim 4, wherein a guide surface is provided between the input end of the conveyor and the feeding means to additionally aid in preventing the rupture of the flexible encasing member.

6. A can end unpackaging apparatus comprising a conveyor adapted to transport a plurality of can ends arranged in face-to-face relationship and encased in a tubular, flexible member along a predetermined path from an input end of the conveyor to an output end of the conveyor, means located between the input and output ends of the conveyor for severing the tubular member while said tubular member is being transported along the predetermined path means located beyond said severing means for completely removing the severed flexible member from about the plurality of can ends transported by the conveyor and means for guidably contacting the can end edges during the movement thereof beyond said removing means.

7. The can end unpackaging apparatus as defined in claim 6 wherein means are provided for tensioning said severed flexible member as the same is being removed from about the plurality of can ends.

8. The can end unpackaging apparatus as defined in claim 6 wherein means are positioned adjacent said severing means for guiding adjacent severed portions of the tubular flexible member away from each other and into a common plane.

9. The can end unpackaging apparatus as defined in claim 6 wherein means are provided adjacent the output end of the conveyor for detecting the sufficiency of can ends being transported by the conveyor, said detecting means being operable in one condition thereof to indicate a sufficiency of can ends and being further operable in another condition to indicate an insufficiency of can ends being transported by said conveyor.

10. The can end unpackaging apparatus as defined in claim 9 wherein the conveyor comprises a driven conveyor, drive means adapted to drive said conveyor to transport the plurality of can ends between the input and output ends of the conveyor, said detecting means being connected to said drive means to stop said drive means upon one indicated condition of the detecting means and start said drive means upon another indicated condition of the detecting means thereby assuring a sufficient output of can ends transported by said conveyor.

11. A can end unpackaging apparatus comprising a conveyor adapted to transport a plurality of can ends arranged in face-to-face relationship and encased in a tubular, flexible member along a predetermined path from an input end of the conveyor to an output end of the conveyor, means located between the input and output ends of the conveyor for severing the tubular member while the tubular member is being transported along the predetermined path, said severing means including a cutting portion arranged substantially parallel to the said predetermined path whereby linear severance of the tubular member is performed, and means located beyond said severing means for completely removing the severed flexible member as a single piece from about the plurality of can ends and means for continually guiding said can ends by edge contact therewith in axially aligned face-to-face relationship between said severing means and said removing means.

12. A can end unpackaging apparatus comprising a conveyor adapted to transport a plurality of can ends arranged in face-to-face relationship and encased in a tubular, flexible member along a predetermined path from an input end of the conveyor to an output end of the conveyor, means located between the input and output ends of the conveyor for severing the tubular member while the tubular member is being transported along the predetermined path, said severing means including a cutting portion arranged substantially parallel to the said predetermined path whereby linear severance of the tubular member is performed, means located beyond said severing means for completely removing the severed flexible member as a single piece from about the plurality of can ends, a pressure roll mechanism at the output end of said conveyor, said pressure roll mechanism being cooperative with a portion of the conveyor to grip the severed flexible member therebetween, and a slip-tensioned wind-up spool adapted to receive thereabout the severed flexible member directly from said pressure roll mechanism thereby providing compact winding of the severed flexible member upon said spool.

13. The can end unpackaging apparatus as defined in claim 12 wherein guiding means are positioned adjacent said severing means for guiding adjacent severed portions of the tubular flexible member into a common plane and a substantially flat condition.

14. A can end unpackaging apparatus comprising a conveyor adapted to transport a plurality of can ends arranged in face-to-face relationship and encased in a tubular flexible member along a predetermined path from an input end of the conveyor to an output end of the conveyor, means located between the input and output ends of the conveyor for severing the tubular member while the tubular member is being transported along the predetermined path, said severing means including a cutting portion arranged substantially parallel to the said predetermined path whereby linear severance of the tubular member is performed, plow means cooperative with the severing means for progressively spacing portions of the tubular member away from the peripheral edges of the plurality of can ends whereby the tubular member is severed by the cutting portion without the cutting portion contacting the peripheral edges of the plurality of can ends and means for supporting the can ends on the peripheral edges thereof after the severance of the tubular member during the progressive spacing of portions thereof away from the peripheral edges of the can ends.

15. A can end unpackaging apparatus comprising a conveyor adapted to transport a plurality of can ends arranged in face-to-face relationship and encased in a tubular, flexible member along a predetermined path from an input end of the conveyor to an output end of the conveyor, means located between the input and output ends of the conveyor for severing the tubular member while the tubular member is being transported along the predetermined path, said severing means including a cutting portion arranged substantially parallel to the said predetermined path whereby linear severance of the tubular member is performed, means located beyond said severing means for completely removing the severed flexible member as a single piece from about the plurality of can ends, a vertically movable and rotatable feeding device for feeding the encased can ends to the input end of the conveyor, and means for regulating the vertical movement of said feeding device.

16. A can end unpackaging apparatus comprising a vertically movable and freely rotatable support adapted to have coiled thereabout a plurality of can ends arranged in face-to-face relationship and encased in a tubular, flexible, paperstock member, a conveyor belt having an input end adjacent said support, said conveyor belt adapted to transport said member along a predetermined path from the input end of the conveyor to an output end thereof, means for driving said conveyor belt, a regulating arm having a first end portion journaled at the input end of the conveyor belt and a second end portion extending in overlying relation to the support, a rotating cutting blade supported above the conveyor belt between the input and output ends thereof, a tapered plow supported above said conveyor belt and cooperative with the cutting blade for progressively lifting portions of the tubular paperstock member toward the cutting blade, a guiding shoe on each side of the predetermined path for directing severed portions of the tubular paperstock member into a common plane, a tensioned wind-up spool adjacent the output end of the belt conveyor adapted to have the severed member compactly coiled thereabout, and a detecting device adjacent the output end of the conveyor belt for indicating the sufficiency of can ends being transported by the conveyor belt, said detecting device being operably connected to the conveyor belt driving means to stop said driving means upon a first indication and to start said driving means upon a second indication.

17. The method of unpackaging a plurality of can ends arranged in face-to-face relationship and encased in an elongated, tubular, flexible member comprising the steps of transporting the encased can ends along a predetermined path, continuously severing the flexible member, separating the flexible member from the plurality of can ends and guiding the can ends to maintain the face-to-face relationship thereof immediately after the severing of the flexible member.

18. The method of unpackaging a plurality of can ends arranged in face-to-face relationship and encased in an elongated, tubular, flexible member comprising the steps

of moving the encased can ends along a predetermined path, continuously severing the flexible member during the movement thereof along the predetermined path, unwrapping the severed flexible member from its tubular unsevered form to a generally planar flat form to expose the plurality of can ends and supporting the can ends through the flexible member until the flexible member is in planar form.

19. The method of unpackaging a plurality of can ends encased in a flexible member comprising the steps of moving the plurality of encased can ends between two positions, longitudinally linearly severing the flexible member during the movement thereof between the two positions and removing the severed flexible member to expose the plurality of can ends and edge guiding the can ends after the severing of the flexible member.

20. A can end unpackaging apparatus comprising means for feeding a plurality of can ends arranged in face-to-face relationship and encased in an elongated, tubular, flexible member, said means including conveyor means for transporting said encased can ends along a predetermined horizontal path of travel, means for progressively severing the flexible member as the encased can ends are conveyed along the predetermined horizontal path of travel, means for progressively removing the severed flexible member, and means for contacting peripheral edges of the can ends for guidably supporting the can ends in face-to-face relationship during the movement thereof by the conveyor means beyond the severing means.

21. A can unpackaging apparatus comprising means for feeding a plurality of can ends arranged in face-to-face relationship and encased in an elongated, tubular, flexible member, said feeding means including support means for supporting the flexible member in coil form, said support means being vertically movable and rotatable, means for regulating the vertical movement of said support means, a conveyor mechanism adjacent said support means and adapted to transport said encased can ends along a predetermined horizontal path, means for progressively severing the flexible member as the encased can ends are conveyed by the conveyor along the predetermined path, means for progressively unwrapping the severed flexible member from the generally unsevered tubular configuration thereof to a generally planar configuration, and said conveyor mechanism conveying both the severed flexible member and the can ends as the same are being progressively unwrapped.

22. The can end unpackaging apparatus as defined in claim 21 including guide means adjacent the severing means and continuing in the direction of can end travel along the predetermined path for engaging edges of the can ends and maintaining the can ends in face-to-face relationship during the unwrapping of the severed flexible member.

23. The can end unpackaging apparatus defined in claim 21 including means for spacing the flexible member from the peripheral edges of the plurality of can ends as the same are advanced along the predetermined path, said spacing means including a relief portion, and said severing means including a blade projectible through said relief portion for severing the flexible member but being sufficiently spaced to prevent the severing of the can end peripheral edges.

24. A can end unpackaging apparatus including conveyor means adapted to transport a plurality of can ends arranged in face-to-face relationship in a flexible encasing member along a predetermined horizontal path from an input end of the conveyor to an output end of the conveyor, means for progressively severing the flexible member as the encased can ends are conveyed along the predetermined path, means for progressively unwrapping the severed flexible member, means positioned beyond the severing means for removing the severed flexible member from about the encased can ends, and said conveyor supporting said can ends through the severed flexible member between the severance and removal thereof.

25. A can end unpackaging apparatus comprising a vertically movable and rotatable support adapted to have coiled thereabout a plurality of can ends arranged in face-to-face relationship and encased in a tubular, flexible member, a conveyor having an input end adjacent said support, said conveyor being adapted to transport said member along a predetermined path from the input end of the conveyor to an output end thereof, means for driving said conveyor, regulating means for regulating the vertical movement of the support, a cutter supported above the conveyor between the input and output ends thereof, a plow supported above the conveyor and cooperative with the cutter for progressively lifting portions of the tubular member toward the cutter, a guide shoe on each side of the predetermined path for directing severed portions of the tubular member into a common plane, removing means adjacent the output end of the conveyor for removing the severed member, a detecting device adjacent the output end of the conveyor for indicating the sufficiency of can ends being transported by the conveyor, and said detecting device being operatively connected to the conveyor driving means to regulate the conveyor upon indications of the detecting device.

References Cited by the Examiner

UNITED STATES PATENTS

1,628,215	5/27	Zoline	83—425
2,366,271	1/45	Lerch	83—429
3,027,108	3/62	Russo et al.	242—54
3,105,283	10/63	Pernick	242—56.2

CHARLES W. LANHAM, *Primary Examiner.*