(No Model.)

R. C. PARVIN.

RUNNING GEAR FOR VEHICLES.

No. 260,047. Patented June 27, 1882.

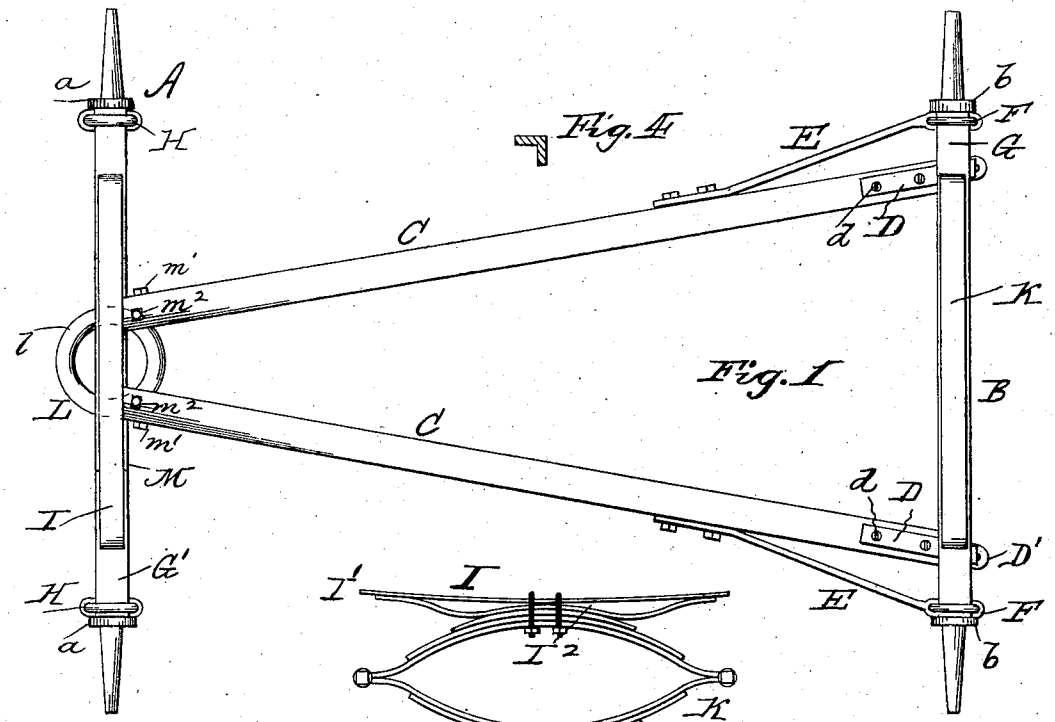

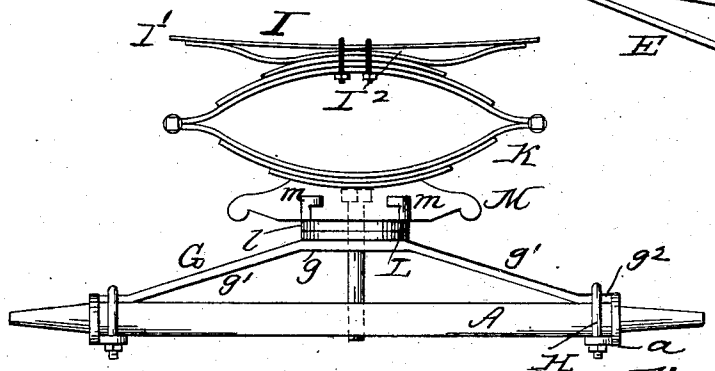

Fig. 2

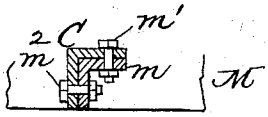

Fig. 6

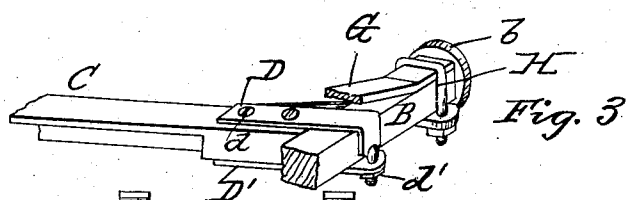

Fig. 3

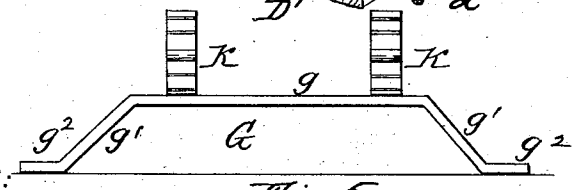

Fig. 5

WITNESSES:

S. J. VanStavoren

Jno. B. Connolly

INVENTOR,

Robert C. Parvin,

By Connolly Bros.

ATTORNEYS.

N. PETERS, Photo-Lithographer, Washington, D. C.

UNITED STATES PATENT OFFICE.

ROBERT C. PARVIN, OF VINELAND, NEW JERSEY.

RUNNING-GEAR FOR VEHICLES.

SPECIFICATION forming part of Letters Patent No. 260,047, dated June 27, 1882.

Application filed October 4, 1881. (No model.)

To all whom it may concern:

Be it known that I, ROBERT C. PARVIN, a citizen of the United States, residing at Vineland, in the county of Cumberland and State of New Jersey, have invented certain new and useful Improvements in Running-Gear for Vehicles; and I do hereby declare the following to be a full, clear, and exact description of the invention, reference being had to the accompanying drawings, which form part of this specification, in which—

Figure 1 is a plan of my improved running-gear. Fig. 2 is a front elevation of the forward axle. Fig. 3 is a broken perspective of a portion of the rear axle and reach. Fig. 4 is a transverse section of one of the reaches. Fig. 5 is an elevation of spring truss or support suitable for wagons having two rear springs, and Fig. 6 is a detail cross-section of reaches at point of connection with head-block.

My invention has relation to metal running-gears for wagons; and my improvements consist in the peculiar construction and combination of parts, hereinafter fully described, having reference to the reaches, which are made of angle-iron, to the manner of connecting them to the rear axle, to crotches which connect said reaches and axle together, to the spring-supports, and to the head-block, all as hereinafter fully described.

Referring to the accompanying drawings, A designates the front axle, B the rear axle, and C C reaches connecting the same. Said reaches are formed of angle-iron, preferably L-shaped in cross-section, as shown in Fig. 4. Their forward ends are secured to the head-block, as hereinafter stated, while their rear ends are secured to the hind axle by means of plates D and D′, as shown plainly in Fig. 3. The plates D and D′ are secured to the reaches by screws *d d*, said plates D having their rear ends bent down over the axle B, passed through openings in the plate D′, and then secured by nuts *d′*.

E E are crotches bolted to the sides of the angle-bar reaches and secured to the axle B by clips F, which fit on said axle just inside of the collars *b b*. Said crotches relieve the draft on the reaches and prevent the latter from spreading apart or sliding on the axle.

G G′ represent the axle truss or spring supports, which are of metal, elevated centrally to give a middle flat bearing, *g*, inclining thence, as shown, on either side at *g′ g′*, the ends g^2 g^2 being horizontal, secured to the axles by clips H H, and impinging against the collars *a*.

I represents the bolster, resting on the front spring, K. Said bolster consists of a metallic plate or bar, I′, which is depressed slightly at the center, so as to leave its ends somewhat elevated above the rest of it. It has secured to its under side, by welding or otherwise, a spring-plate, I^2, of sinusoidal or bow form, which rests upon the spring beneath. By this method of construction the bolster itself forms a spring, and thereby affords an additional elastic or resilient support for the body. The truss or spring supports take the place of the stock heretofore generally employed. Said stock is made of wood, secured to the axle at various points along its length by numerous clips, and throws the weight of the body on the middle of the axle. My metal truss, on the contrary, is fastened to the axle only at its ends, thus dispensing with many of the clips heretofore required, and throws the weight of the body and load on the ends of the axles, or just inside of the wheels. The rear truss is duly shaped on the upper side of its central elevation or bearing for the reception of the spring, which is bolted directly thereto. The central bearing of the front truss receives the lower circle of the fifth-wheel L.

On the upper circle, *l*, is secured the head-block M, to which the ends of the reaches are fastened. Said block is made of steel, is hollow, and affords a bearing for the spring, which is secured to it by bolts *x x*. The head-block M is made of metal (preferably either malleable iron or steel) and is hollow, and has two lugs, *m m*, which project from its rear side. To these lugs the reaches are secured by bolts m' m^2, one of said bolts being horizontal and the other vertical.

To adapt the improvement to wagons having three springs, the bearing of the rear bridge is lengthened or extended and the rear springs supported thereon near the extremities of said bearings, as shown in Fig. 5.

I am aware that it has been heretofore pro-

posed to make an axle in two sections, one in the form of an arch over the other, the ends of the two sections being socketed in the thimbles.

I am also aware that the employment of angle-iron is not in itself invention, my improvement in connection with the use of such material consisting in the peculiar combination, with angle-iron reaches, of devices whereby the employment of such material for the purpose specified is rendered practicable.

What I claim as my invention is as follows:

1. The combination of the axle A, the truss G′, fastened only at its ends thereto, the fifth-wheel supported on said truss, the head-block sustained on said wheel, and the spring fastened thereto, substantially as shown and described.

2. The combination, with rear axle, B, of reaches C C, secured thereto by plates D and D′, crotches E E, and truss G, the ends of said crotches and truss being fastened to said axle by clips H, which pass over the former and through the latter, substantially as shown and described.

3. The bolster-bar I, having a bow-shaped plate or bar secured to its under side, substantially as shown and described.

4. The metal head-block M, having lugs *m m* on its rear side for securing the reaches thereto, substantially as shown and described.

5. The combination, with the head-block M, having lugs *m m*, of the angle-bar reaches secured thereto by bolts *m′ m²*, substantially as shown and described.

In testimony that I claim the foregoing I have hereunto set my hand this 24th day of September, 1881.

ROBERT C. PARVIN.

Witnesses:

C. E. JAMES,

W. BÉRAULT.