J. J. WOOD.

POWER DRIVE FOR WASHING MACHINES.

APPLICATION FILED JULY 25, 1918.

1,396,082. **Patented Nov. 8, 1921.**

4 SHEETS—SHEET 1.

Fig. 1.

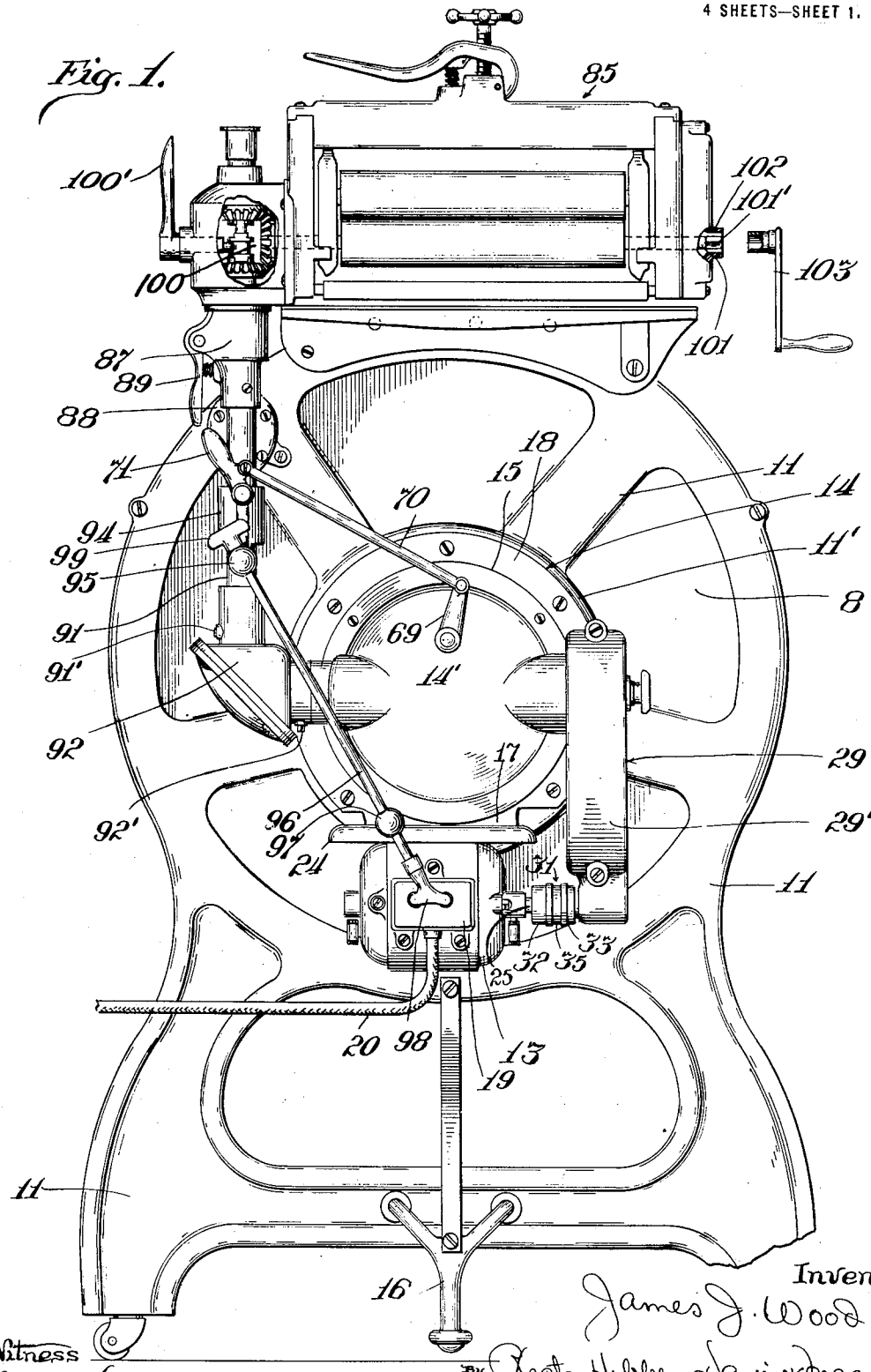

Inventor

James J. Wood

Witness

Milton Lenoir

By Rector Hubben Davis & Macauley

Attorneys.

J. J. WOOD.

POWER DRIVE FOR WASHING MACHINES.

APPLICATION FILED JULY 25, 1918.

1,396,082.

Patented Nov. 8, 1921.

4 SHEETS—SHEET 2.

Fig. 2.

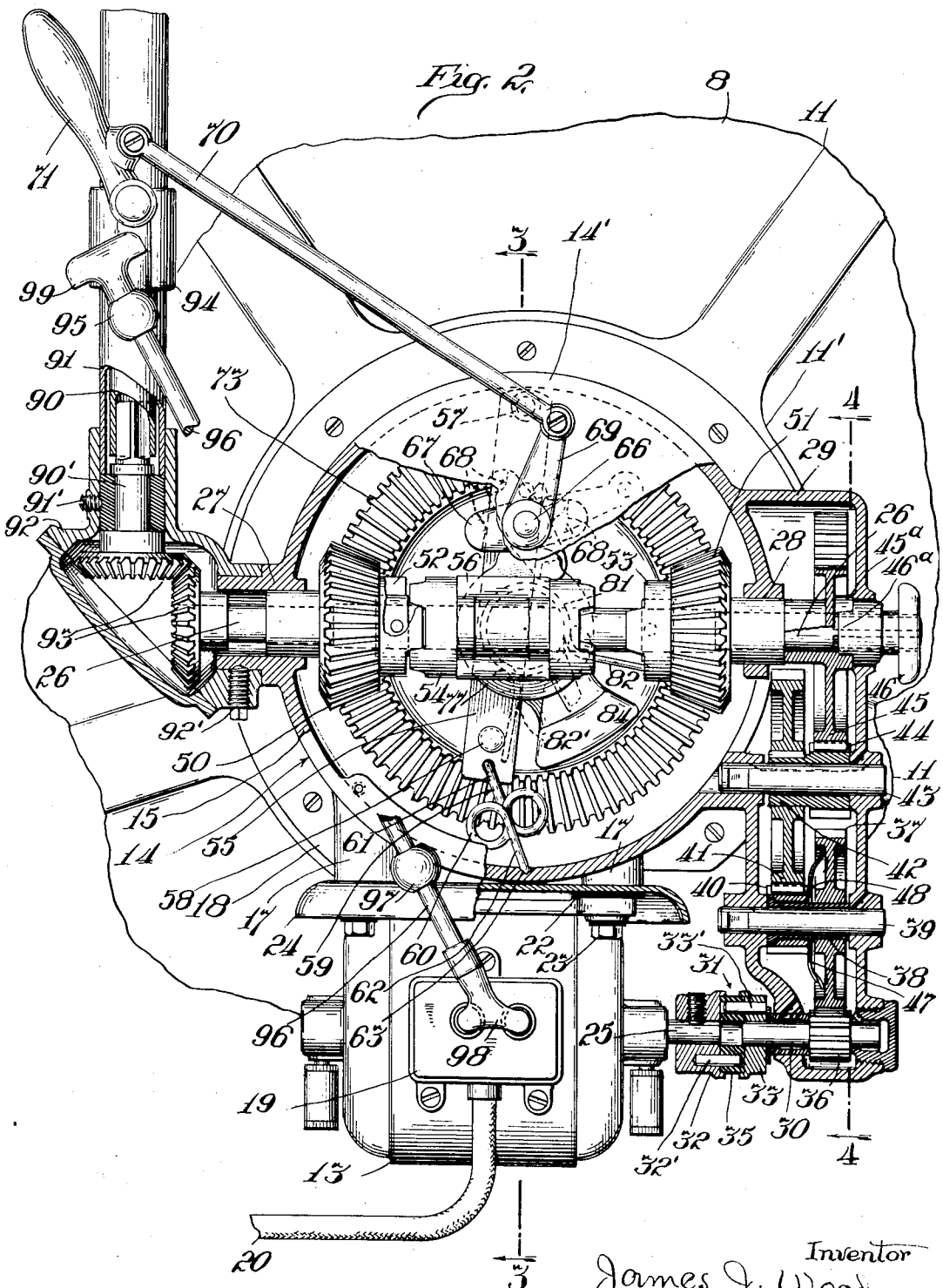

Inventor

James J. Wood

Witness

Milton Lenoir

Rector Hibben Davis & Macauley

Attorneys.

J. J. WOOD.

POWER DRIVE FOR WASHING MACHINES.

APPLICATION FILED JULY 25, 1918.

1,396,082. **Patented Nov. 8, 1921.**

4 SHEETS—SHEET 3.

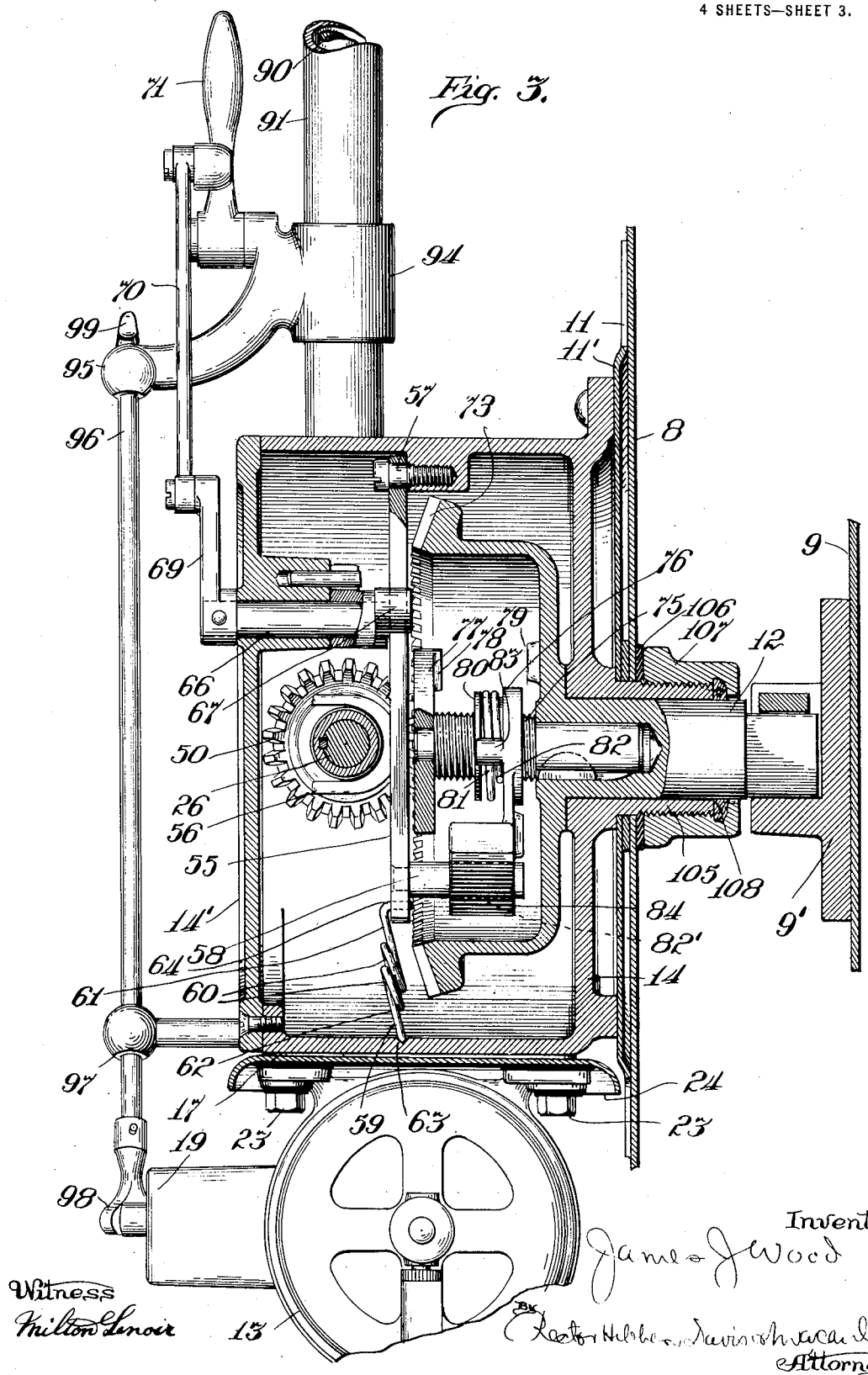

Witness
Milton Lenoir

Inventor
James J Wood

By Rector Hibben Davis & Macauley
Attorneys.

J. J. WOOD.

POWER DRIVE FOR WASHING MACHINES.

APPLICATION FILED JULY 25, 1918.

1,396,082.

Patented Nov. 8, 1921.

4 SHEETS—SHEET 4.

Fig. 4.

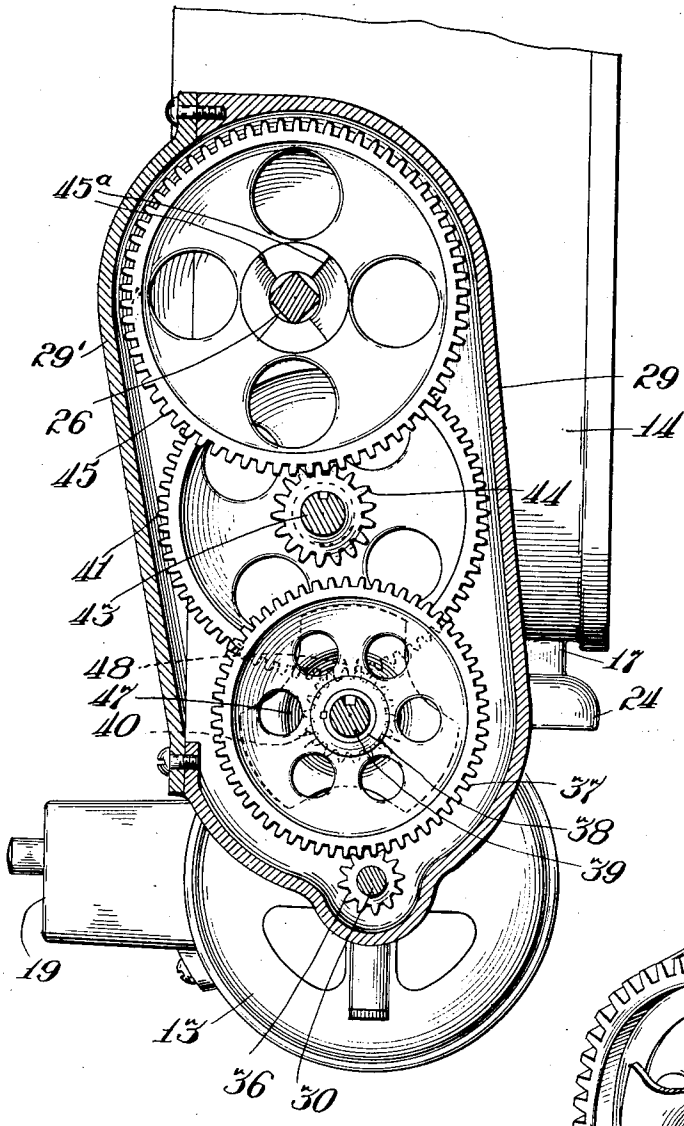

Fig. 6.

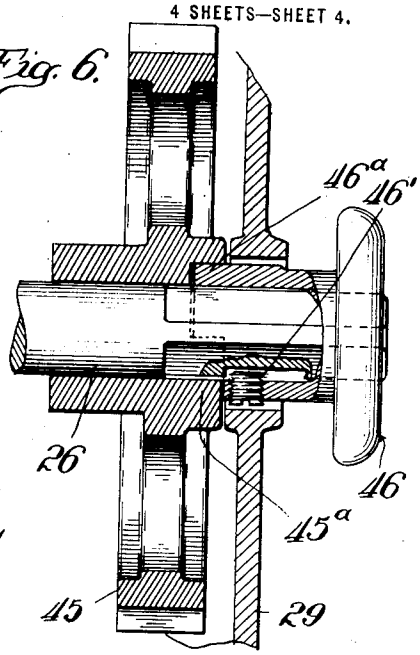

Fig. 7.

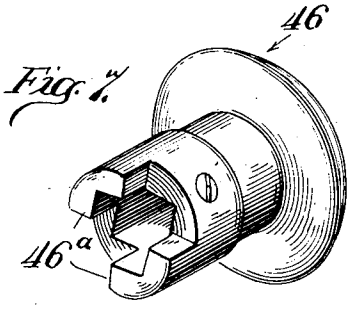

Fig. 5.

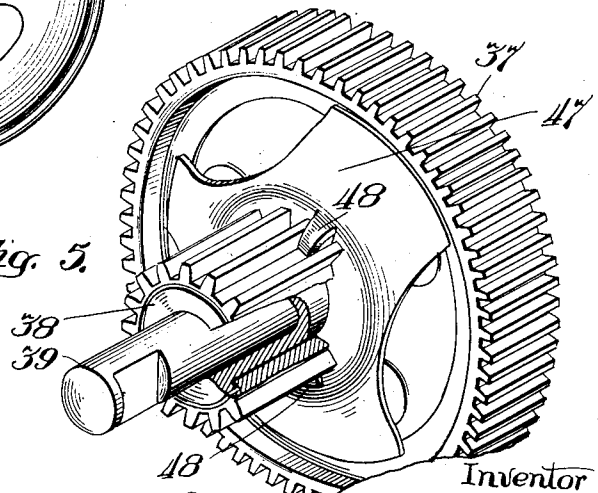

Witness
Milton Lenoir

Inventor
James J. Wood
Rector Hibben Davis & Macauley
Attorneys.

UNITED STATES PATENT OFFICE.

JAMES J. WOOD, OF FORT WAYNE, INDIANA, ASSIGNOR, BY MESNE ASSIGNMENTS, TO HURLEY MACHINE COMPANY, OF CHICAGO, ILLINOIS, A CORPORATION OF ILLINOIS.

POWER-DRIVE FOR WASHING-MACHINES.

1,396,082. Specification of Letters Patent. Patented Nov. 8, 1921.

Application filed July 25, 1918. Serial No. 246,647.

To all whom it may concern:

Be it known that I, JAMES J. WOOD, a citizen of the United States, residing at Fort Wayne, in the county of Allen and State of Indiana, have invented certain new and useful Improvements in Power-Drives for Washing-Machines, of which the following is a specification.

My invention relates to improvements in clothes washing machines and, in some of its features, more particularly to electrically driven machines. Among the objects of my invention are to simplify the driving mechanism; to combine the principal operating parts in a structural unit which may be assembled apart from the tub and frame standards; to organize the gearing, and connect it with the motor and the cylinder shaft, for maximum efficiency; to associate the electrical elements for greater simplicity, convenience and safety; to arrange all the manually-operated controlling members for operating facility; and to improve upon washing machine constructions heretofore known, both in general and in detail. The features of my invention for attaining these and other objects and advantages will become apparent from the following description, taken in conjunction with the claims.

In the accompanying drawings wherein I have illustrated a single embodiment of my invention, Figure 1 is an end elevation of an electrically operated washing machine; Fig. 2 is an end elevation, with parts broken away, showing on a larger scale the principal parts of the power unit and control means; Fig. 3 is a vertical longitudinal section on line 3—3 of Fig. 2; Fig. 4 is the detail of the spur gear train with parts broken away; Fig. 5 is a detail of the slip connection between such train; and Figs. 6 and 7 are details of a handle connection with the main power shaft.

While washing machines are well known wherein the movable clothes-containing element,—tub or cylinder—has been driven from an electric motor through the intermediary of shafts and gearing, it is general practice to locate the motor on the main frame below the tub or housing, or otherwise disassociated from the mounting of the gear parts appurtenant to the clothes-container. This entails elaboration of gearing and universal-shaft connections, increase in size and number of parts, and various other disadvantages in manufacture and in use. As one feature of my invention I make provision of a power-and-driving unit, the parts of which may be assembled in their co-operative relation on their own base, apart from the main frame, and which may be mounted as a unit in final relation to the clothes-container and frame elements of the washer. This unit organization is particularly compact, simple, relatively-inexpensive, free from trouble-potentialities, and enables the use of very advantageous mechanisms in detail. Illustratively the drawings indicate a washing machine having a tub or casing 8 of a shape suitable to receive the well-known cylinder type of clothes-container 9, such tub being mounted on end standards, preferably metal stampings one of which is shown at 11. One such standard 11 has a central boss or ring 11′ to receive the base of the power-unit and strengthening ribs are stamped as needed. The operating mechanism for the clothes container is herein shown as of a type adapted to produce the well-known operation of rotating the clothes-cylinder through a plurality of turns first in one direction and then in the other, though some of the features of my invention may be embodied with other types of devices. The entire train of power transmission mechanism, from the shaft section 12 (that is connected with one end-hub 9′ of the clothes-container and therefore is a shaft-to-be-driven) to the electric motor 13 that supplies the driving power, is built as a unit, all carried by a base 14, the principal element of which preferably is a cylindrical gear housing 15 to be mounted on the boss of standard 11. This construction places the entire operating structure close to the shaft line of the clothes-container beyond one end standard of the machine. To obviate the possibility of endwise upsetting of the machine due to the concentration of weight at the stated point, the appropriate end standard 11 is provided with a supplemental center foot 16 extending beyond the center of weight of the power unit and preferably having its contact end located slightly above the plane of the casters for the standards, so that this end frame of the machine may act as a tripod on occasion, and positively prevent accidental upsetting.

In the specific construction shown, motor 13 is mounted directly on a suitable boss 17 on the underside of the housing 15 which is provided with a base flange 18 to be secured to the end boss 11′ of standard 11. The control switch 19 for the motor, shown as a two-button push-switch, is mounted directly on the motor-casing, preferably at the outer side thereof, and the flexible cable 20 may be led directly into the switch casing. This gives a most advantageous wiring facility and economy as well as greatest safety to the operator and the frame of the entire electrical structure may be insulated from the housing 15 by insulating washers 22 overlying the base of the motor, the attaching screws 23 of course being also suitably insulated. Preferably a shallow hood 24 with down turned edges is interposed between the insulation 22 and boss 17 to shield the motor and its insulating washers against drip.

The motor shaft, 25, has connection through a reducing train, preferably of spur gearing, with the main power shaft 26 and the latter extends transversely across the center of the housing 15 to afford at one end a connection with the reducing train and at the other a connection with the upright wringer-shaft. The housing 14 has in its annular wall journals 27 and 28 for the shaft and beyond the journal 28 it has connected therewith, preferably integrally, a downwardly extending, tangential-extension gear-case 29 that terminates at its lower end beyond the line of shaft 25. A cover 29′ overlying both the cylindrical housing and its extension 29, complete the inclosure. A short shaft 30, mounted for rotation in suitable bushed bearings in the front and rear walls of casing-extension 29 alines with the motor shaft 25 and is connected to it, preferably with sufficient flexibility to compensate for any slight variation from alinement present in building or caused by differences of expansion or otherwise. For such flexible coupling purposes I prefer to use an elastic joint 31 and so I mount on the adjacent ends of the two shafts rigid crown-flanged heads 32 and 33, these bearing a suitable number of pins, 32′, 33′ projecting alternately from the respective heads, these pins engaging apertures in an interposed rubber block 35 seated in the flange-bounded recesses in said heads. The rubber block is of ample strength to afford the requisite torque, and sufficiently flexible to yield slightly as a universal joint. Also it acts as a shock absorber and as an electrical insulator.

A spur pinion 36 on shaft 30 drives a gear 37 mounted on sleeve 38 that rotates on a fixed shaft 39, such sleeve carrying also a pinion 40. This pinion 40 drives a gear 41 mounted on sleeve 42 borne by the fixed shaft 43, said sleeve carrying also pinion 44 that drives gear 45 fast on main power shaft 26. The end of shaft 26 may be squared and have mounted thereon a hand-knob 46 slidable to the extent of notch-and-screw connection 46′ and projecting beyond the gear casing 29. The knob and gear having engaging hub-teeth 46^a, 45^a, as shown so that sliding the knob will clutch the gear to or release it from the shaft.

The reduction to be effected of course determines extent of the gear train and gear-ratios, and to protect the motor against burning out should the load on the main power shaft become too great for the safe driving power of the motor, a friction clutch or slip connection is preferably provided between the motor and main shaft. This requirement I accommodate within the spur-gear train by mounting the pinion 40 loosely on its sleeve 38 (all of the other gear elements mentioned being fast in their respective sleeves) and between the gear 37 and the adjacent pinion 40 I provide a slip connection the preferred form of which is shown in Fig. 5. 47 is a cupped friction-member having suitable spring arms bearing firmly against the side surface of gear 37, near the periphery thereof, this element surrounding the sleeve 38 and having prongs 48 struck out of its arm centers to engage in the tooth valleys of pinion 40, which is made long enough to receive the same beyond the area of contact with gear 41. Manifestly the spur gear reduction and slip connection are simple, compact and effective, and assembly, in manufacture, is particularly easy.

Consistently with the requirements to rotate the clothes-cylinder alternately in opposite directions—this being the preferred type of machine shown,—shaft 26 has loosely mounted thereon, within the housing 15 two beveled gears 50 and 51, these having confronting clutch projections 52 and 53 between which there slides a clutch sleeve 54 non-rotatable with respect to the shaft. Of course in its extremes of position this sleeve couples one or the other beveled gear to the main shaft, while in mid-position it is "in neutral," freeing both gears from the shaft, A shifter lever 55, having yoke prongs 56 to move the clutch sleeve is pivoted at 57 within the top of the housing and near its bottom is provided with projecting pin 58 by which the lever is automatically operated as hereinafter described. An overthrow spring arrangement is provided, normally to hold the shifter lever at one or the other of its limits of throw. For cheapness and simplicity I prefer to employ a spring 59 as illustrated in Fig. 2, formed of a single length of spring wire centrally bent in a figure eight form, and beyond the opposite loops 60 extending in axial linear limbs 61 and 62, the former having a pointed extremity seating in a

socket 63 in the housing and the latter having a bent extremity 64 engaging an aperture in the shifter lever. Such spring construction I find to have ample rigidity to serve its purpose as a retaining strut to hold the lever at either limit and sufficient flexibility to yield endwise to permit the throw of the shifter lever past dead center.

For stopping the machine without stopping the motor, so to enable the wringer to be operated without moving the shaft 12, the clutch sleeve 54 has to be thrown to neutral position, and to this end I provide a rock shaft 66 extending through the front wall of the housing, and carrying a yoke 67 straddling the shifter lever 55, this yoke when turned to the position shown in full lines in Fig. 2 permitting the shifter lever to move, but when rocked clockwise to dotted position, Fig. 2, bringing its surfaces 68 into contact with the shifter lever on opposite sides thereof positively to force the lever to and maintain it in vertical or neutral position with the spring structure 59 consequently under tension. The yoke is rocked by means of crank 69 mounted on the exterior end of shaft 66 and linked as at 70 to a controlling handle 71.

The two beveled pinions 50 and 51 mesh with a beveled gear 73 which is fast on shaft section 12 (Fig. 3) that serves to operate the clothes-container of the machine, and such gear 73 carries the reversal-controlling mechanism that automatically works the shifter lever 55 periodically to change the direction of rotation of the gear 73 and its shaft 12. In type this reversing mechanism is well known, but the specific construction herein shown is improved in detail. The gear 73 is cupped to give the requisite space in which to mount the reversing parts, and shaft 12 has mounted therein a screw projection 75 on which there rides within the gear cup, the traveler nut 76, said screw having fixed to its end a disk 77. The nut may travel lengthwise of the screw until stopped by engagement with appropriate one of ribs 78 and 79 on disk 77 and gear 73, when it must rotate with the screw shaft. This nut has coiled around its grooved hub 80 a spring member 81 that has radially extending limbs 82 and 82′ at its ends, these being restrained under some compression at their knees, or junction with the coil, by studs 83, and straddling the tail 84 of the nut. The path of rotative movement of these spring limbs and of the tail 84 is intercepted by the pin 58 on the shifter lever so that when, with the gear 73 rotating counterclockwise (Fig. 2) say, in driven engagement with the clutched pinion 50, the nut 76 is picked up by projection 79 of gear 73 and is swung rotatively with the screw shaft, spring limb 82 strikes pin 58 and acts, in conjunction with tail 84, to throw the shifter lever 55 to reverse position, thus changing the direction of drive of the gear 73 and causing the pinion to travel to its other extreme of motion.

The washing machine is usually provided with wringer 85, power driven, and mounted adjacent the top of the standard 11. In the construction shown such wringer is mounted to swing on a fixed head 87 connected by bracket 88 with the end standard 11, a latch 89 being provided to hold the wringer in its desired adjusted position. The drive shaft 90 for the wringer has a detachable lower-end stub 90′ and is vertically disposed in a tube 91 that extends from detachable connection with head 87 to slip fit into a gear casing 92 to which the tube is secured by screw 91′ and casing 92 is detachably mounted on the external boss of bearing 27 for the main shaft 26 and held by such screw 92′. The main shaft is connected by beveled gearing 93 within such casing 92 to drive the wringer shaft 90 and it will be apparent that the gears 93 may be assembled with the other elements of the unit before application to the frame. The sleeve 91, thus extending vertically near the front of the machine is utilized as a front post on which to mount the controlling handles, and is removable, if desired, as part of the power and gearing unit. Thus lever 71 that controls the stopping of the clothes receptacle is pivoted on a collar 94 just below latch 89 and through a lug 95 on said collar 94 there extends a rock-shaft 96 passing at its lower end through a boss 97 on the housing and carrying at its extremity a part of fingers 98 overlying the two push buttons of the control switch 19. By turning the handle 99 on the extremity of said rock-shaft the switch 19 is controlled by the user. This assemblage of all of the control elements in close proximity at a single control station facilitates the use of the mechanism, and the removal of all electrical parts from proximity to such station minimizes possibility of the user being subject to shock should electrical troubles develop.

As a feature important to the user of the machine I make advantageous provision for operating the washing machine by hand should fuse-blow-out or other electrical trouble prevent power operation of the machine. The vertical wringer shaft 90 of course has gear connections 100, clutch controlled by usual mechanism, (not detailed herein) operated by shifting lever 100′, to roll-shaft 101 of the wringer, which at its remote end is squared at 101′ and is accessible through an opening 102 in the wringer-frame. A hand crank 103 may be applied to the roll shaft of the wringer to drive the transmission parts extending back to and including main shaft 26, so to apply hand power to operate the washing machine cylin-

der. Under these conditions the user will pull out knob 46 (Fig. 6) to disconect the spur gear train from the main shaft. It will be observed that operating the hand crank at the speed usual in operating a wringer will result in revolution of the clothes cylinder at its proper speed, and also that the hand crank is located high enough to be very convenient for the operator.

The sealing of the washing machine tub against leakage may of course be variously accomplished, but I prefer to form housing 14 with a threaded boss 105 passing through the frame boss and tub end and receiving packing washers 106 and nut 107 packed at 108 around the stub-shaft 12.

While I have herein described one embodiment of my invention in detail it will be understood that I do not limit myself to details in the broader aspects of my invention as many changes accordant with specific variations of machine-type and design may be made to suit particular requirements without departure from the spirit of my invention within the scope of the appended claims.

What I claim is:

1. A washing machine main frame including an end-standard, and a power-and-gearing unit detachably mounted on said end-standard and comprising a base and a shaft to be driven, a motor and gearing for connecting the motor and the shaft to be driven, all carried by said base, and a supplemental foot secured to said standard and extending beyond the weight-center of the base-carried unit.

2. Driving means for a cylinder washing machine comprising a base having a cylindrical main housing and a tangential extension housing, a main shaft extending transversely through said main housing, a shaft to be driven extending axially into said main housing, gearing connection for said two shafts, a spur gear train for the main shaft mounted in said extension housing, a motor mounted on said main housing having its shaft connected with the gear train in said extension housing, and a control switch for said motor mounted on the motor casing.

3. The combination with a cylinder washing machine having an end-standard, of a gearing base mounted on said standard, a motor mounted on the under side of said base, a drip hood overlying said motor, gearing carried by said base connected with said motor, and a shaft to be driven arranged for operation through said gearing.

4. Gearing for a cylinder washing machine including a shaft to be driven, a main shaft, connections to drive the former from the latter in either direction, reversing means including a shiftable lever 55, supporting means for said parts, and a spring interposed between said supporting means and said lever to tend to hold the latter alternatively in its extremes of position, said spring having linear limbs 61 and 62, and an interposed loop, all formed of a single piece of wire.

5. Gearing for a cylinder washing machine including a shaft to be driven, a main shaft, connections to drive the former from the latter in either direction, reversing means including a shiftable lever 55, supporting means for said parts, and a spring interposed between said supporting means and said lever to tend to hold the latter alternatively in its extremes of position, said spring having linear limbs 61 and 62, and interposed double loops 60 of figure eight shape, all formed of a single piece of wire.

6. Reversing mechanism for a cylinder washing machine comprising a shaft to be driven, a gear thereon, a transverse shaft, loose gears thereon engaging the gear on the shaft to be driven, a clutch for connecting either said loose gear with the transverse shaft, a shifter lever for said clutch, spring means tending to maintain said shifter lever at its extremes of movement, automatic means for periodically shifting the said shifter lever, and manual means for moving said shifter lever to and holding it in mid-position to unclutch both loose pinions, said means comprising a yoke straddling the shifter lever, and means for moving said yoke.

7. Reversing mechanism for a cylinder washing machine comprising a shaft to be driven, a gear thereon, a transverse shaft, loose gears thereon engaging the gear on the shaft to be driven, a clutch for connecting either said loose gear with the transverse shaft, a shifter lever for said clutch, spring means tending to maintain said shifter lever at its extremes of movement, automatic means for periodically shifting the said shifter lever, comprising a screw shaft axially carried by said gear, a nut on said screw shaft having a hub and a tail to cooperate with the shifter lever, a single spring member carried by said hub and having limbs projecting on opposite sides of the said tail, and a pin carried by the shifter lever in the rotative path of said spring limbs and tail.

8. A traveling nut for a reversing mechanism of a cylinder washing machine, comprising a hub having a grooved portion and studs 83, a tail portion 84, and a single wire spring element coiled around said hub, with its ends bent under said studs 83 and its extremities forming limbs extending approximately radially and straddling the tail.

9. A washing machine gearing and control unit comprising a base for attachment to an end-standard of the machine, said base having a central portion forming a housing, a downwardly projecting rear exten-

sion, an upwardly extending front post, a motor mounted on said housing, motor driven reduction gearing in said frame extension, cylinder operating gearing in said main housing, means for disconnecting the latter gearing including a manual handle mounted on said front post, an electrical switch for the motor, and a switch operating means also mounted on said front post.

10. The combination with a washing machine and wringer and driving mechanism therefor comprising a motor, of a transverse main shaft, a washing machine operating gearing driven by said main shaft, gearing connecting said motor at one end of said main shaft, gearing connecting the other end of said main shaft with the wringer, a tubular post constituting a housing for the last said connection, located near the front of the machine, manual means for disconnecting the operating gearing and main shaft including a handle mounted on said post, a switch for said motor, and manual means for controlling said switch including a handle mounted on said post.

11. In a combined washing and wringing machine, a main shaft, a motor for driving said shaft, a wringer having a roll-shaft driven from the main shaft, said roll having its free end arranged for handle reception, and manually operable means for disconnecting the motor from the main shaft, whereby the latter may be hand-driven from the wringer roll-shaft without operating the motor.

12. In a combined washing and wringing machine, a main shaft for actuating a movable part of the washing machine, a motor, power transmission means connected with the motor and the main shaft, manually operable means for making and breaking connection between said transmission means and the main shaft, a wringer having a roll shaft driven from the main shaft, said roll having its free end arranged for handle reception, and clutch means for connecting and disconnecting said roll shaft with the main shaft.

JAMES J. WOOD.