Feb. 22, 1949. W. C. MIKKELSON ET AL 2,462,117

SELSYN TRANSMISSION BY RADIO

Filed April 12, 1945 3 Sheets-Sheet 1

FIG. 1.

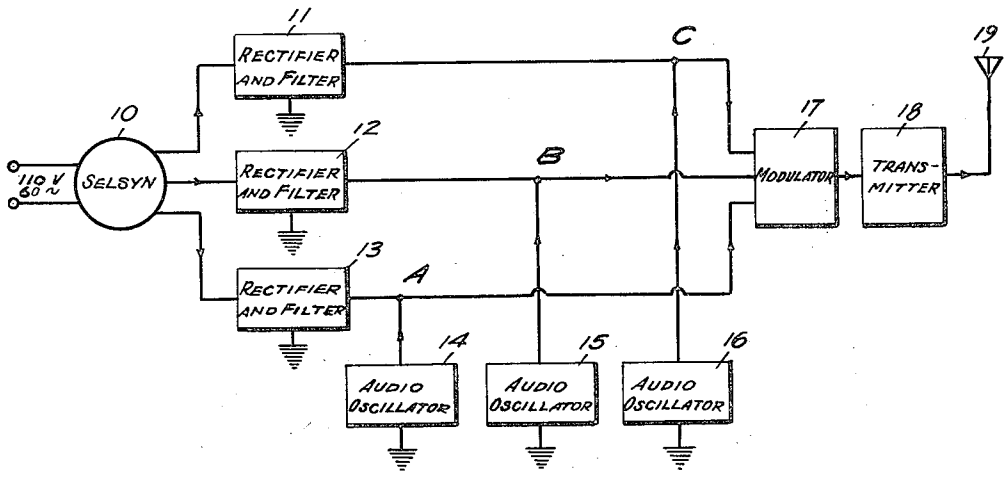

FIG. 2.

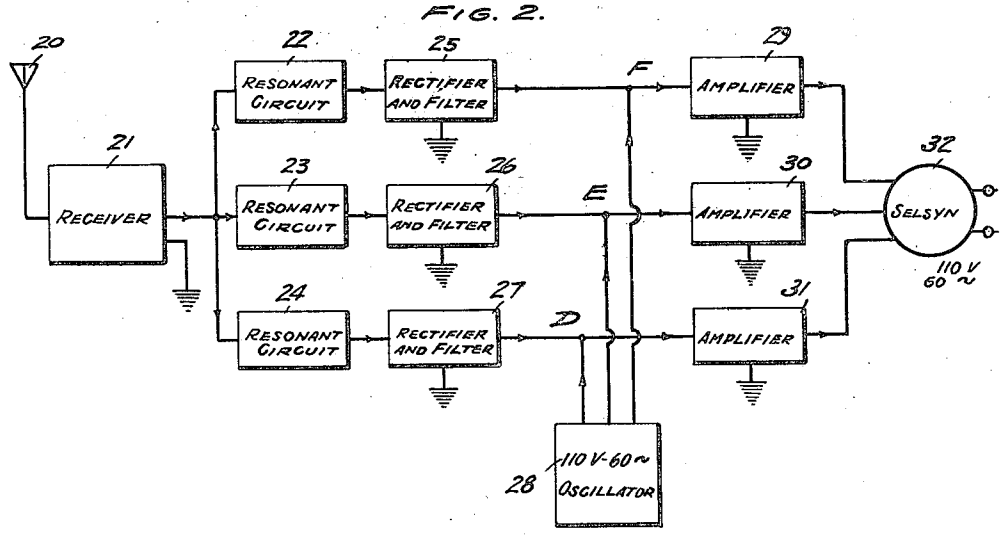

INVENTORS
WARD C. MIKKELSON
JACOB ANTHES
BY
William D. Hall.
ATTORNEY

Feb. 22, 1949. W. C. MIKKELSON ET AL 2,462,117

SELSYN TRANSMISSION BY RADIO

Filed April 12, 1945 3 Sheets-Sheet 2

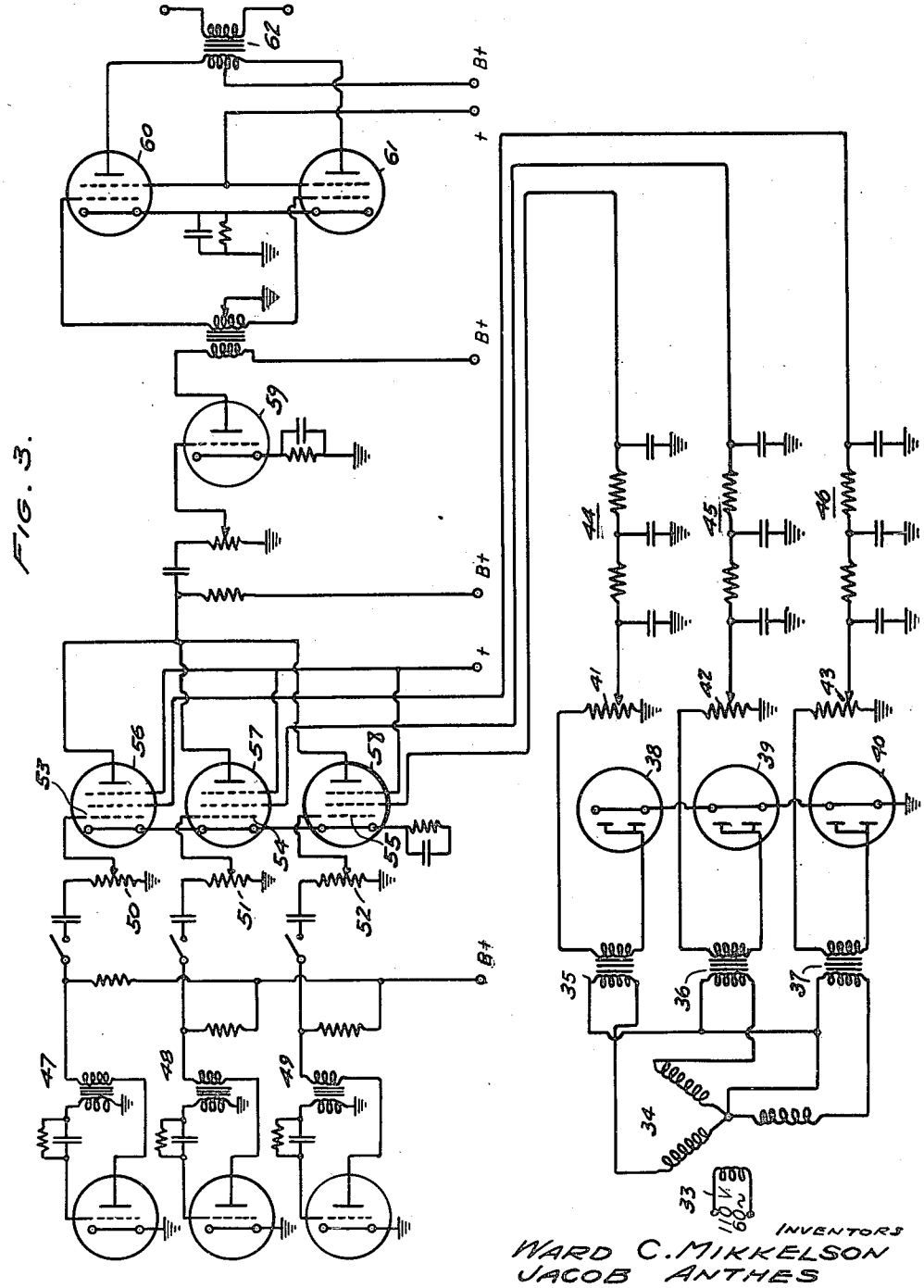

FIG. 3.

INVENTORS
WARD C. MIKKELSON
JACOB ANTHES
BY William D. Hall
ATTORNEY

Feb. 22, 1949. W. C. MIKKELSON ET AL 2,462,117

SELSYN TRANSMISSION BY RADIO

Filed April 12, 1945 3 Sheets-Sheet 3

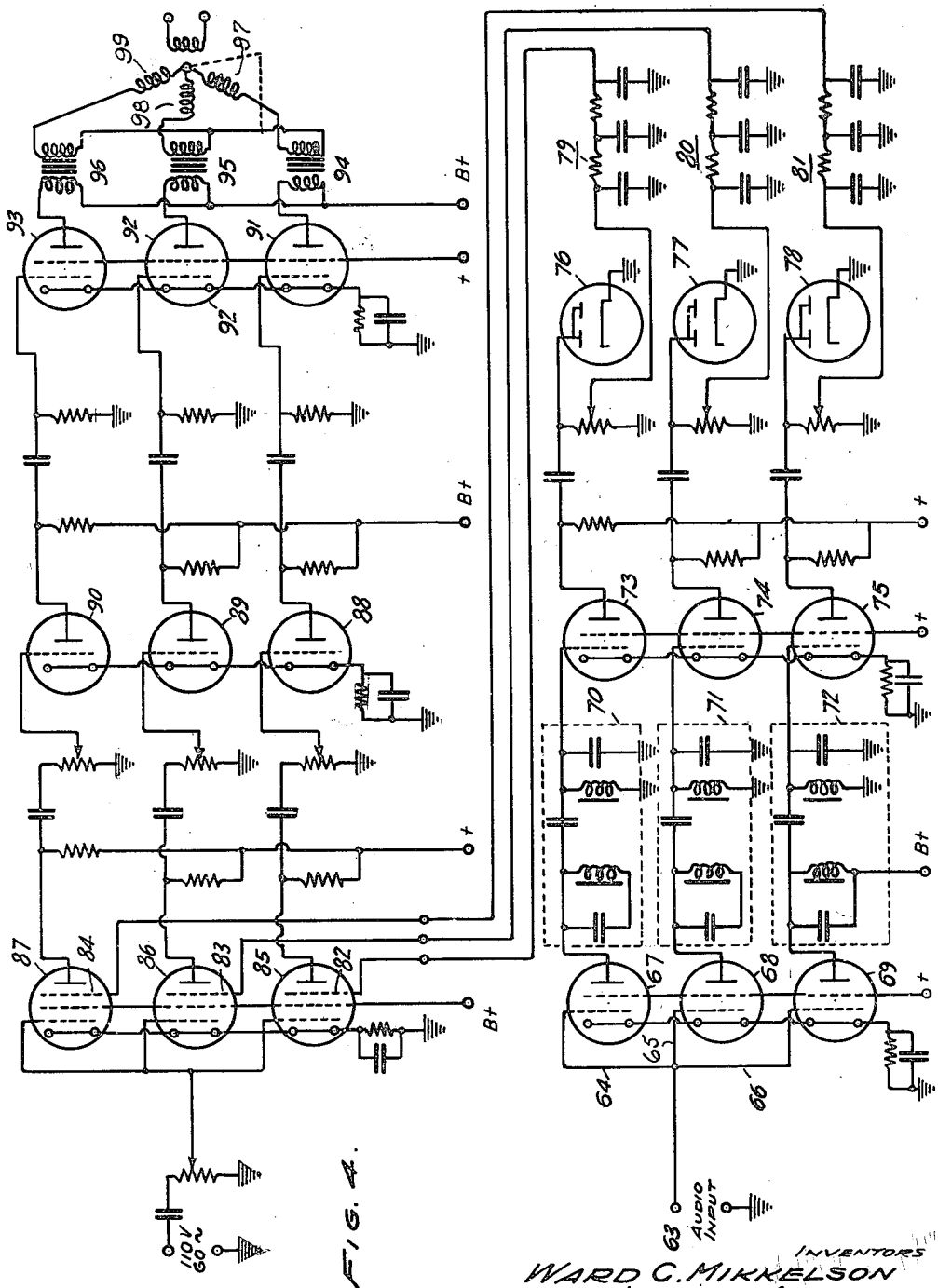

FIG. 4.

INVENTORS
WARD C. MIKKELSON
JACOB ANTHES
By William D. Hall.
ATTORNEY

UNITED STATES PATENT OFFICE

2,462,117

SELSYN TRANSMISSION BY RADIO

Ward C. Mikkelson and Jacob Anthes,
United States Army

Application April 12, 1945, Serial No. 588,048

1 Claim. (Cl. 177—337)

(Granted under the act of March 3, 1883, as amended April 30, 1928; 370 O. G. 757)

1

The invention described herein may be manufactured and used by or for the Government for governmental purposes, without the payment of any royalty thereon.

This invention relates to telemetering systems, and more particularly to systems for transmitting data from one Selsyn to another Selsyn by means of a modulated radio carrier wave.

It is one object of this invention to afford a telemetering system that will eliminate any and all material connections between the reference instrument and the reproducer instrument.

It is another object of this invention to provide a telemetering system utilizing a single amplitude-modulated, radio carrier of narrow channel width.

It is still another object of this invention to provide a telemetering system that will permit data to be transmitted from one Selsyn to another Selsyn by means of a single, amplitude-modulated carrier wave.

These, as well as other objects and advantages will become readily apparent when the following specification is read in conjunction with the accompanying drawings in which

Figure 1 is a block diagram of the transmitting portion of the invention

Figure 2 is a block diagram of the receiver portion of the invention

Figure 3 is a circuit diagram of one embodiment of the transmitter portion of the system

Figure 4 is a circuit diagram of one embodiment of the received portion of the system.

Referring to Figure 1 which illustrates in block diagram the transmitter portion of the system, it is seen that the reference numeral 10 refers to a Selsyn of the type well known in the art in which a 110 volt, 60 cycle voltage may be fed to the rotor thereof. As stated previously, it is one of the purposes of this invention to transmit the angular position of the Selsyn rotor to a remote indicator without the use of any connecting wires. The output of the Selsyn stator will be in the form of three alternating current voltages, the amplitude of each being dependent upon the angular position of the Selsyn rotor. Each of the aforementioned voltages is rectified and filtered to obtain a direct current voltage whose magnitude is directly proportional to the alternating current voltage appearing in the output of the Selsyn stator. Three rectifier and filter circuits 11, 12 and 13 are illustrated to accomplish this purpose.

Three audio oscillator circuits 14, 15 and 16 generating three different audio frequency voltages, for example 60, 120 and 240 cycles per second

2

are connected so that the output of each is com bined with the output of rectifier and filter ci cuits 13, 12 and 11 respectively at junction poin A, B and C. The frequency of each of the aud oscillators 14, 15 and 16 is not limited to the fr quency just stated, but may be changed withi certain limits, provided the correspondir changes are made at the receiver as will be mo fully explained later.

The three voltage outputs from audio oscillato 14, 15 and 16 are adjusted so that the amplitu of each is the same. The voltages appearing the junction points A, B and C will be the ou puts of audio oscillators 14, 15 and 16 supe imposed upon the D. C. voltage output of rectifi and filter circuits 13, 12 and 11 respectivel These voltages are then fed into a modulator where they are combined.

The input to the modulator 17 thus compris three voltages which are directly proportional the three voltages appearing in the output of t stator of the transmitting Selsyn 10, but inste of being 60 cycle A. C., they are now convert to 60, 120 and 240 cycle voltages respectivel The output of the modulator 17 is fed into a tran mitter 18 and the output therefrom radiated means of an antenna 19. The signal radiat from the antenna 19 is a radio carrier wave th is modulated by the superimposing of the thr alternating voltages thereon as heretofore e plained.

The receiver portion of the system as illustrat in block diagram form in Figure 2, includes an a tenna 20 and a receiver 21 that is capable of b ing tuned to the frequency of the transmitted si nal radiated from the transmitting antenna The receiver 21 may be any well known type su as a superheterodyne circuit. The output of t receiver 21 is taken off preferably at the seco detector. The audio output of the receiver 21 divided into three channels, each of which is f through a resonant circuit. For this purpo there are provided three resonant circuits 22, and 24 to separate the received composite aud signal into the three frequencies of which it composed. These frequencies will be 60 cycl 120 cycles, and 240 cycles in accordance with t audio frequencies making up the modulation the transmitted carrier wave. However, in ord to operate a Selsyn at the receiving station, the voltages must be modified. To accomplish t modification, a system identical in many respec to the transmitter previously described is utilize

The output of each of the resonant circuits 23 and 24 is fed through a rectifier and filter ci

lt 25, 26 and 27 respectively, in order to obtain lirect current voltage, the magnitude of which directly proportional to the amplitude of each dio frequency voltage impressed thereon. An :illator 28 is utilized to feed a 110 volt, 60 cycle ltage to the junction points D, E, and F where s superimposed upon the direct current voltage uing from the rectifier and filter circuits 25, 26 d 27.

The voltage appearing at each of the junction ints D, E and F will be a 110 volt, 60 cycle volte superimposed upon a direct current voltage. ese voltages will be in the same proportional ationship to each other as the voltages appear; at the output of the transmitter Selsyn 10. ch of the voltages appearing at the junction ints is then fed through a conventional audio plifier 29, 30 and 31 respectively and applied the stator of a receiver or indicating Selsyn 32 e rotor of which will then assume the same anlar position as the rotor of the transmitting lsyn 10.

A specific circuit for accomplishing the objects this invention is shown in Figures 3 and 4; Fige 3 showing one embodiment of the transmitg portion of the system. A transmitting Selsyn ving a rotor 33 is connected to a 110 volt 60 :le source. A stator 34 of the transmitting lsyn is provided with the usual three field coils, e output of each being a 60 cycle voltage whose plitude is dependent upon the angular position the rotor 33. These three voltages are each l into the primary winding of transformers 35, and 37 respectively for isolation and phase in:sion. The output from each of the secondary ndings of the transformers 35, 36 and 37 is fed o three separate rectifier tubes 38, 39 and 40 spectively.

In order to compensate for any difference in cuit constants between the three channels, each tifier tube output circuit is connected to a tentiometer. Potentiometers 41, 42 and 43 are own as connected to the ground end of the three nsformers 35, 36 and 37 respectively in order adjust the output of rectifier tubes 33, 39 and

The three potentiometers 41, 42 and 43 are justed so that the same maximum voltage outt will be obtained from the rectifier tubes 38, and 40. This balanced output is then fed ough a filter network; there being three sepae filter networks 44, 45 and 46, one for each annel. The relationship in output voltage from e filter networks 44, 45 and 46 will be the same was present in the output of the three Selsyn tor windings 34.

Three audio oscillators 47, 48 and 49 are proed, each having a different frequency output. r the purpose of illustration, the oscillator cirts 47, 48 and 49 may be so chosen as to operate 60, 120 and 240 cycles per second. These frencies may be changed within certain limits, ovided the corresponding changes are made at e receiver, as will be discussed later.

Potentiometers 50, 51 and 52 are utilized to just the audio oscillator voltage outputs so that ey are of the same amplitude. The balanced dio frequency output of each oscillator circuit 48 and 49 is fed to control grid 53, 54, 55 and spectively of three pentode voltage amplifier bes 56, 57 and 58. The voltage relations of the ree suppressor grids of the amplifier tubes 56, and 58 will be determined by the outputs of e rectifier tubes 38, 39 and 40 which in turn are pendent upon the angular position of the transtting Selsyn rotor 33. The suppressor grid

voltage acts as the determining factor in the voltage gain of tubes 56, 57 and 58 and therefore will determine the amplitude of the 60, 120 and 240 cycle per second voltage fed therethrough from the audio oscillator circuits 47, 48 and 49.

The three voltages from the output circuits of amplifier tubes 56, 57 and 58 are combined and fed into a single driver tube 59. This composite waveform is further amplified in a conventional class AB power output stage including amplifier tubes 60 and 61. The amplifier output is then fed into a modulation transformer 62 and then to any conventional transmitter.

Referring to Figure 4 which illustrates in circuit diagram form one embodiment of the receiving portion of the system it is seen that the reference numeral 63 refers to the audio input which may be taken off at the second detector of any conventional receiver capable of receiving and detecting the signal radiated by the transmitter. The audio input is split into three channels 64, 65 and 66 each of which is connected to the grid of amplifier tube 67, 68 and 69 respectively. The audio signal input at 63 must be separated into the three frequencies of which it is composed and this is accomplished by the use of three resonant circuits 70, 71 and 72 of the parallel type, connected across the plate circuit of tubes 67, 68 and 69 and the grid input of amplifier tubes 73, 74 and 75 respectively. The parallel resonant circuits 70, 71, 72 will cause a high effective load resistance at the predetermined frequencies, which in the illustrated embodiment has been chosen at 60, 120 and 240 cycles per second respectively.

At this point in the circuit there has been established a voltage relationship between the three channels that is identical to that existing in the transmitter. However, all three voltages must be converted back to 60 cycles in order to operate a standard type of Selsyn repeater. To accomplish such a conversion, a system similar in many respects to that used in the transmitter modulator previously described is utilized.

The three voltages appearing in the output circuit of vacuum tubes 73, 74 and 75 are fed through rectifiers 76, 77 and 78 and then filter circuits 79, 80 and 81 respectively, to obtain three separate D. C. voltages having the same proportional relationship between them as existed in the three channels 65, 64 and 66. These three D. C. voltages which may properly be termed "control voltages" are then impressed upon the suppressor grids 82, 83 and 84 of three pentode vacuum tubes 85, 86 and 87 respectively, to control the amount of amplification that any input voltage impressed on the control grids of tubes 85, 86 and 87 will receive.

An input voltage of 110 volts at 60 cycles per second is applied to the control grids of tubes 85, 86 and 87 with the result that the plate output of each of these tubes will be a 60 cycle voltage the amplitude of which is determined by the output of the rectifier tubes 76, 77 and 78 respectively. The output from each of the tubes 85, 86 and 87 is sent through conventional audio amplifier tubes 88, 89 and 90 and power amplifier tubes 91, 92 and 93 respectively. The exact amount of power output required will be determined by the current requirements of the repeater or indicating Selsyn. The output of each of the power amplifier tubes 91, 92 and 93 is coupled through matching transformers 94, 95 and 96 to indicating Selsyn stator coils 97, 98 and 99 respectively. The rotor 100 of the indicator Selsyn will thereupon assume the same angular position relative to the stator coils as the rotor 33 of the transmitting Selsyn.

As stated previously, the frequencies to be utilized in the signal generators 47, 48 and 49 of the transmitter may be any set of frequencies desired just so the resonant circuits 70, 71 and 72 are tuned to the frequencies chosen.

Static should have no appreciable effect on the receiving Selsyn's operation or accuracy because such interference will merely cause a momentary voltage increase for the duration of the noise pulse. Since such voltage increase will be impressed on all three Selsyn voltages alike the effects cancel out.

While we have shown one specific embodiment of our invention, it is obvious that many changes and modifications may be made by those skilled in the art which would still lie within the scope of the appended claim.

We claim:

A system for indicating at a remote point the angular position of the rotor of a self-synchronous generator having at least three fields comprising means for establishing three separate audio frequency voltages, means for rectifying the alternating current voltage output of each of the generator fields, means for combining each of said rectified voltages with the output of one of said audio frequency voltages, the amplitude of each of said resultant audio frequency voltages being dependent upon the relative angular position of the generator rotor, means for combining said resultant audio frequency voltages to obtain a composite voltage wave, means for establishing

a radio frequency carrier, a modulator for modulating said carrier with said composite voltage wave, means for transmitting said modulated carrier wave, means for receiving and demodulating said modulated carrier wave to obtain a composite oscillatory signal, means for separating said composite oscillatory signal into three separate audio frequency components, means for rectifying and filtering each of said three audio frequency components to obtain a direct current voltage, means for combining each of said direct current voltages with an oscillatory voltage of audio frequency to obtain a resultant oscillatory voltage, means for utilizing said three resultant oscillatory voltages to form three overlapping fields and means for giving indications in accordance with the resultant of said three overlapping fields.

WARD C. MIKKELSON.
JACOB ANTHES.

REFERENCES CITED

The following references are of record in the file of this patent:

UNITED STATES PATENTS

Number	Name	Date
1,576,195	Junken	Mar. 9, 1926
1,600,204	Alexandersen	Sept. 14, 1926
1,941,615	Merick	Jan. 2, 1934
2,378,395	Dickson	June 19, 1945