(12) INTERNATIONAL APPLICATION PUBLISHED UNDER THE PATENT COOPERATION TREATY (PCT)

(19) World Intellectual Property Organization
International Bureau

(43) International Publication Date
16 April 2020 (16.04.2020)

WIPO | PCT

(10) International Publication Number
WO 2020/076794 A1

(51) International Patent Classification:
H02G 3/08 (2006.01) *B65D 1/24* (2006.01)
H02G 3/10 (2006.01) *B65D 1/36* (2006.01)
H02G 3/14 (2006.01)

(21) International Application Number:
PCT/US2019/055148

(22) International Filing Date:
08 October 2019 (08.10.2019)

(25) Filing Language: English

(26) Publication Language: English

(30) Priority Data:
62/742,600 08 October 2018 (08.10.2018) US

(71) Applicant: **HUBBELL INCORPORATED** [US/US]; 40 Waterview Drive, Shelton, Connecticut 06484 (US).

(72) Inventor: **MORTUN, Sorin Ioan**; 225 Taxter Road, Ivington, New York 10533 (US).

(74) Agent: **POWELL, John**; Verrill Dana, LLP, One Portland Square, Portland, Maine 04101 (US).

(81) Designated States *(unless otherwise indicated, for every kind of national protection available)*: AE, AG, AL, AM, AO, AT, AU, AZ, BA, BB, BG, BH, BN, BR, BW, BY, BZ, CA, CH, CL, CN, CO, CR, CU, CZ, DE, DJ, DK, DM, DO, DZ, EC, EE, EG, ES, FI, GB, GD, GE, GH, GM, GT, HN, HR, HU, ID, IL, IN, IR, IS, JO, JP, KE, KG, KH, KN, KP, KR, KW, KZ, LA, LC, LK, LR, LS, LU, LY, MA, MD, ME, MG, MK, MN, MW, MX, MY, MZ, NA, NG, NI, NO, NZ, OM, PA, PE, PG, PH, PL, PT, QA, RO, RS, RU, RW, SA, SC, SD, SE, SG, SK, SL, SM, ST, SV, SY, TH, TJ, TM, TN, TR, TT, TZ, UA, UG, US, UZ, VC, VN, ZA, ZM, ZW.

(84) Designated States *(unless otherwise indicated, for every kind of regional protection available)*: ARIPO (BW, GH, GM, KE, LR, LS, MW, MZ, NA, RW, SD, SL, ST, SZ, TZ, UG, ZM, ZW), Eurasian (AM, AZ, BY, KG, KZ, RU, TJ, TM), European (AL, AT, BE, BG, CH, CY, CZ, DE, DK, EE, ES, FI, FR, GB, GR, HR, HU, IE, IS, IT, LT, LU, LV,

(54) Title: ELECTRICAL RECEPTACLE COVER

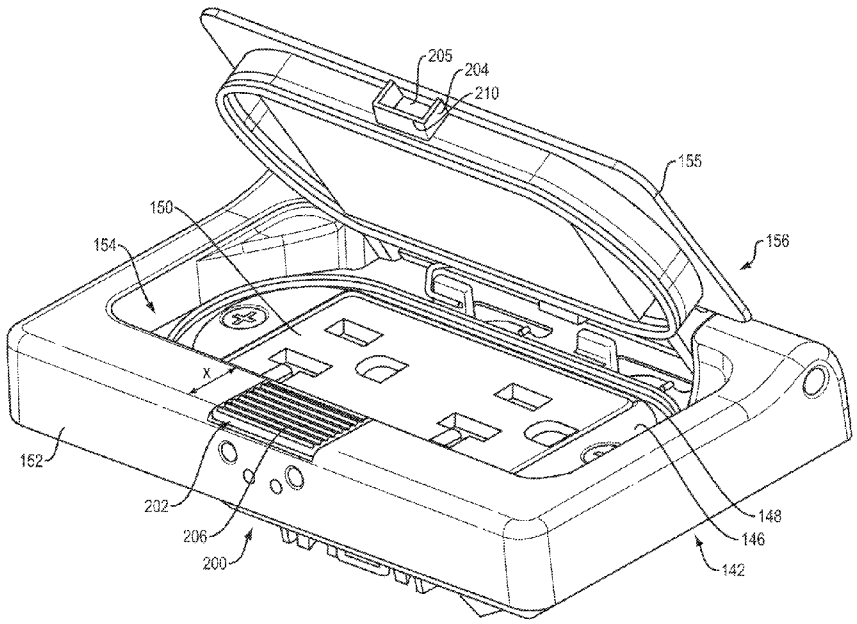

FIG. 4B

(57) Abstract: An electrical receptacle cover, comprising a cover base, configured to be affixed to an electrical receptacle assembly. The cover base including a base surface having at least one opening configured to be aligned with an electrical receptacle of the electrical receptacle assembly. The cover base includes a base wall disposed about and extending from a perimeter of the base surface and the base surface and the base wall together define a base cavity. There is a cover lid interconnected with the cover base and it is moveable, via a hinge, from an open position, in which the base cavity is exposed, to a closed position in which the base cover is substantially disposed within the base cavity.

WO 2020/076794 A1

[Continued on next page]

MC, MK, MT, NL, NO, PL, PT, RO, RS, SE, SI, SK, SM, TR), OAPI (BF, BJ, CF, CG, CI, CM, GA, GN, GQ, GW, KM, ML, MR, NE, SN, TD, TG).

Declarations under Rule 4.17:

— *as to applicant's entitlement to apply for and be granted a patent (Rule 4.17(ii))*

Published:

— *with international search report (Art. 21(3))*

ELECTRICAL RECEPTACLE COVER

CROSS-REFERENCE TO RELATED APPLICATIONS

This application claims the benefit of priority to U.S. Provisional Application No. 62/742,600, filed October 8, 2018, which is incorporated herein by reference.

FIELD OF THE INVENTION

This disclosure generally relates to a cover for an electrical receptacle and more specifically to such a cover that provides an improved seal to increase waterproofing and limit the accumulation of contaminants, such as dirt and grass.

BACKGROUND OF THE INVENTION

Household electrical receptacles are often situated in outdoor locations to permit plugging in of various outdoor electrical appliances, such as electric weed trimmers, outdoor lighting, and other outdoor electrical equipment. These outdoor electrical receptacles are significantly more vulnerable to contamination from dirt, grass, water and other foreign matter than electrical receptacles located indoors. As a result, outdoor electrical receptacles are usually provided with some type of protective cover for preventing the entry of such contaminants.

One common type of outdoor cover is a metal cover that is hinged to a base and biased in a closed position by a spring. The outlet cover pivots from a closed position, covering the receptacles, to an open position, allowing access to the receptacles. The receptacles are typically flush with the base and when the cover is in the closed position it is located above the base with a bottom surface of the cover engaged with the base to cover the receptacle. The outer surface of the cover includes portions that are susceptible to the collection of contaminants and the bottom surface may not tightly seal the receptacles. The hinge is also located above the base and also has open portions where contaminants collect and water may enter. Thus, the cover may become dirty and require more frequent cleaning with water under pressure, which may infiltrate the receptacle through the cover of the hinge.

One such prior art electrical outlet cover assembly 10 is depicted in Fig.1 and consists of a first lid 12, shown in a partially open position, and a second lid 14, shown in a closed position, both with respect to base plate 16. First lid 12 and second lid 14 include end portions 18 and 20, respectively, which are rotatably affixed to base plate 16 via hinge members 22 and 24. The hinge members 22 and 24 may have hinge pins (not shown) upon which end portions 18 and 20 are affixed and rotate. In some implementations, a single hinge pin may be used for both hinge members 22 and 24. In other implementations, multiple hinge pins may be used, one for each of hinge members 22 and 24. First lid 12 is used to cover aperture 26 in base plate 16 through which would be exposed an electrical receptacle when the electrical cover assembly 10 is installed on an outdoor electrical receptacle assembly. Second lid 14 is used to cover a second electrical receptacle (not shown).

The surface of the cover 16 includes portions that are susceptible to the collection of contaminants, such as where the lids 12 and 14 are in contact with the cover surface and near the apertures where the electrical receptacles are exposed, especially if the lids do not tightly seal the receptacles. Another area for contaminants to collect and water to enter is where the end portions 18 and 20 interconnect to the hinge members 22 and 24. As can be seen, there are gaps that are formed in both the open and closed positions in which contaminants may collect and water may enter both of which may infiltrate the receptacle. There is therefore a need for an improved receptacle cover, which improves waterproofing, limits the accumulation of contaminants, such as dirt and grass, and is easier to clean.

BRIEF DESCRIPTION OF THE INVENTION

In an embodiment of the invention, there is included an electrical receptacle cover, which includes a cover base, configured to be affixed to an electrical receptacle assembly. There is included a base surface having at least one opening configured to be aligned with an electrical receptacle of the electrical receptacle assembly. The cover base includes a base wall disposed about and extending from a perimeter of the base surface and the base surface and the base wall together define a base cavity. There is a cover lid interconnected with the cover base and is moveable, via a hinge, from an open position, in which the base cavity is exposed, to a closed position in which the base cover is substantially disposed within the base cavity.

In other aspects of the invention, one or more of the following features may be included. The cover base may be rectangular in shape and the base wall may comprise first and second opposing side wall segments and first and second opposing end wall segments. The hinge of the cover lid may be integrated within the first side wall segment and at least one recess may be formed in a top surface of the second opposing side wall segment. The at least one recess may be configured to receive a protrusion extending from an edge of the cover lid when the cover lid is in the closed position. The protrusion may be accessible by a user inserting a finger into the recess to lift the cover from the closed position to the open position. The cover lid may comprise two cover lid sections, and each cover lid section may be interconnected with the cover base. The cover lid sections may be independently moveable, via a hinge, from an open position, in which a respective portion of the base cavity is exposed, to a closed position, in which the cover lid section is substantially disposed within the respective portion of the base cavity. When the cover lid is in the closed position a top surface of the cover lid may be flush with the top surface of the second opposing side wall segment and a top surface of each of the first and second end walls.

In yet other aspects, one or more of the following features may be included. A portion of the first side wall segment may include at least one opening in which a first end of the hinge is disposed and the cover lid may include a portion which covers the at least one opening when the cover lid is in the closed position. When each of the two cover lid sections is in the closed position a top surface of each cover lid section may be flush with the top surface of the second opposing side wall segment and a top surface of one of the first and second end walls. A portion of the first side wall segment may include at least one opening for each of the two cover lid sections in which a first end of the hinge of the respective cover lid section is disposed and each of the cover lid sections may include a portion which covers the respective opening when the cover lid section is in the closed position. A portion of the first side wall segment may include a latch mechanism to receive and engage with a striker assembly on the cover lid when the cover lid is closed to secure it to the cover base. The latch mechanism may include a protrusion and the striker assembly may include a cavity and wherein when the lid is in the closed position, the protrusion of the catch assembly may be positioned in the cavity of the striker to secure the cover lid in the closed position.

BRIEF DESCRIPTION OF THE FIGURES

Embodiments of the present disclosure will now be described, by way of example only, with reference to the attached Figures, wherein:

FIG. 1 shows a perspective view of a prior art electrical receptacle cover.

FIG. 2A shows perspective view of an embodiment of an electrical receptacle cover according to an aspect of the invention with a single lid in the closed position.

FIG. 2B shows a perspective view of the electrical receptacle cover of Fig. 2A with the single lid in the partially open position.

FIG. 3 shows perspective view of another embodiment of an electrical receptacle cover according to an aspect of the invention, with double integrated lids, one of which is in a partially open position.

FIG. 4A shows front perspective view of the cover base of another embodiment of an electrical receptacle cover according to an aspect of the invention, with a locking mechanism, and cover lid in the closed and secured position.

FIG. 4B shows a front perspective view of the cover base of Fig. 4A, with a locking mechanism, and with the cover lid in a partially open position.

FIG. 5 shows a rear perspective view of the cover base of Fig. 4B, with a locking mechanism, and with the cover lid in a partially open position.

FIG. 6A shows front perspective view (in cross-section) of the cover base of and cover lid of Figs. 4A and 4B with the cover lid in the partially open position.

FIG. 6B shows front perspective view (in cross-section) of the cover base of and cover lid of Figs. 4A and 4B with the cover lid in the closed position.

DETAILED DESCRIPTION OF THE INVENTION

The disclosure and the various features and advantageous details thereof are explained more fully with reference to the non-limiting embodiments and examples that are described and/or illustrated in the accompanying drawings and detailed in the following description. It

should be noted that the features illustrated in the drawings are not necessarily drawn to scale, and features of one embodiment may be employed with other embodiments, as the skilled artisan would recognize, even if not explicitly stated herein.

Descriptions of well-known components and processing techniques may be omitted to not unnecessarily obscure the embodiments of the disclosure. The examples used herein are intended merely to facilitate an understanding of ways in which the disclosure may be practiced and to further enable those of skill in the art to practice the embodiments of the disclosure. Accordingly, the examples and embodiments herein should not be construed as limiting the scope of the disclosure. Moreover, it is noted that like reference numerals represent similar parts throughout the several views of the drawings.

An electrical receptacle cover assembly made of stainless-steel (or other suitable material) with single and double integrated lids is disclosed. The lids are sinked into the main body of the electrical receptacle cover assembly in order to create a smooth exterior surface that will be less likely to accumulate dirt and will be easier to clean than prior art receptacle covers, such as the one depicted in Fig. 1. The integrated lid design versus prior art models does not include exposed springs or lid mechanism parts, so it is less likely to accumulate dirt.

An electrical receptacle cover assembly 40, Figs. 2A and 2B, according to an aspect of this invention, is shown in perspective view. Electrical receptacle cover assembly 40, may include a cover base 42, configured to be affixed to an electrical receptacle assembly 44. The cover base 42 may include a base surface 46 having at least one opening 48 configured to be aligned with an electrical receptacle 50 of the electrical receptacle assembly 40. The cover base 42 may include a base wall 52 disposed about and extending from a perimeter of the base surface 46. The base surface 46 and the base wall 52 together define a base cavity 54, which is on the interior of base wall 52. The electrical receptacle cover assembly 40 may also include a cover lid 55 interconnected with the cover base 42 and moveable, via a hinge 56, from an open position, in which the base cavity 54 is exposed (Fig. 2B), to a closed position in which the cover lid 55 is substantially disposed within the base cavity 54, as shown in Fig. 2A.

The cover base 42 may be rectangular in shape and the base wall 52 may comprise first 58 side wall segment and second side wall segment 60, which are in opposing relation to each other, and first end wall segment 64 and second end wall segment 66, which are in opposing relation to each other. The end and side wall segments may be interconnected in an integrated

manner as shown and may be disposed about and extending from a perimeter of the base surface 46 to define the rectangular base cavity 54 on the interior of base wall 52. The cover lid 55 may also be rectangular in shape with slightly smaller dimensions than base cavity 54, such that when in the closed position, cover lid 55 fits snugly within the base cavity 54 with its top surface flush with the top surface side wall and end wall segments.

Continuing to refer to Figs. 2A and 2B, hinge 56 of the cover lid 55 may be integrated within the first side wall segment 58 and include a spring mechanism 68, which is wound about a pin 70 at one end, and at a second end spring mechanism 68 may be affixed to the underside of cover lid 55. A portion of the first side wall segment 58 may include an opening in which a first end of spring mechanism 68 and pin 70 are disposed. The end portions of first side wall segment 58 may have curved exterior surfaces which extend above the surfaces of the other side wall segment 60 and the end wall segments 62 and 64 to accommodate the space required for pin 70 disposed within it. The cover lid 55 may also include a curved portion which covers the at least one opening and the pin 70 and spring mechanism 68 therein when the cover lid 55 is in the closed position.

The spring mechanism may be biased to keep cover lid 55 securely within cavity 54. In side wall segment 60 on a top surface thereof, there may be formed at least one recess 71 to receive a protrusion 72, extending partially into recess 71, from an edge 74 of the cover lid 55 when it is in the closed position. The protrusion 72 is accessible by a user inserting a finger into recess 71 to lift the cover lid 55 from the closed position to the open position.

In an alternative embodiment, electrical cover assembly 40a, depicted in Fig. 3, may include a cover lid 55a, which comprises two cover lid sections; namely first lid section 80, which is shown in a partially open position, and second lid section 82, which is shown in the closed position. Each cover lid section may be interconnected with the cover base 62a and independently moveable, via its respective hinge 56a/56b, from an open position, in which a respective portion of the base cavity is exposed, to a closed position, in which the cover lid section is substantially disposed within the respective portion of the base cavity.

Hinge 56a of the lid section 80 may be integrated within the first side wall segment 58a and include a spring mechanism 68a, which is wound about a pin 70a at one end, and at a second end spring mechanism 68a is affixed to the underside of lid section 80. As with the embodiment

of Fig. 2, a portion of the first side wall segment 58a may include an opening in which a first end of spring mechanism 68a and pin 70a are disposed. Also, when each of the two cover lid sections 80 and 82 is in the closed position, a top surface of each cover lid section may be flush with the top surface of the second opposing side wall segment and a top surface of one of the first and second end walls. The end portions of first side wall segment 58a may have curved exterior surfaces which extend above the surfaces of the other side wall segment 60a and the end wall segments 62a and 64a to accommodate the space required for pin 70 disposed within it. The lid sections 80 and 82 may also include curved portions which cover the openings in side wall segment 58a and the pin 70a and spring mechanism 68a therein when in the closed position.

In another embodiment, a cover base 142 is shown in Figs. 4A and 4B, which is configured to be affixed to an electrical receptacle assembly (not shown). The cover base 142 of embodiment is comparable to the cover base 42 shown in Figs. 2A and 2B, except this embodiment includes a locking mechanism in order to ensure the cover lid remains closed even under high water pressure conditions. In describing this figure, like features will be described with like reference numerals, e.g. “42” for the base cover in Figs. 2A/B and “142” for the base cover in Figs. 4A/B.

The cover base 142 may include a base surface 146 (Fig. 4B) having at least one opening 148 configured to be aligned with an electrical receptacle 150 of the electrical receptacle assembly. The cover base 142 may include a base wall 152 disposed about and extending from a perimeter of the base surface 146. The base surface 146 and the base wall 152 together define a base cavity 154, which is on the interior of base wall 152. There may also be included a cover lid 155 interconnected with the cover base 142 and moveable, via a hinge 156, from an open position, in which the base cavity 154 is exposed (Fig. 4B), to a closed position in which the cover lid 155 is substantially disposed within the base cavity 154, as shown in Fig. 4A.

There is a lock mechanism 200, to secure lid 155 in the closed position. Lock mechanism 200 may include a catch assembly 202, which may engage with a striker 204 to secure lid 155 in a closed position on cover base 142. When lid 155 is in the closed position, ribbed surface 206 of catch assembly may be moved in a direction away from lid 155 along the X axis to release the striker 204 and allow lid 155 to open. Because lid 155 is biased by springs (not shown in these figures) to be in the open position when the striker 204 is released from the catch assembly 202, it may revert automatically to the open position. Catch assembly 202 may be biased via a spring

mechanism 208 as depicted in Figs. 6A and 6B, described below. Alternatively, neither the lid 155 nor the catch assembly 202 need to be biased via a spring mechanism and they may be manually moved by a user.

Striker 204 may include a cavity 205 which is configured to receive protrusion 207 on catch assembly 202 when lid 155 is closed. As lid 155 is closed, bottom surface 210 of striker 204 contacts angled top surface 211 of protrusion 207 and causes protrusion to retract into wall surface 212, along the X axis, against the bias of the spring mechanism 208. As the lid 155 continues to close, protrusion 207 eventually becomes aligned with cavity 205 on striker 204 and the spring mechanism 208 forces the protrusion 207 to move along the X axis and into the cavity 205 of striker 204, thereby securing the lid in the closed position. To open the lid 155, ribbed surface 206 of latch mechanism may be moved in a direction away from lid 155 along the X axis. This causes protrusion 207 to move out of cavity 205 of striker 204 and allows lid 155 to open as a result of the spring biasing lid 155 to the open position.

Referring to Fig. 6A, a cross-sectional view of cover base 142 with lid 155 nearly in the closed position. Ribbed surface 206 of catch assembly is shown in the extended position moved along the X axis away from lid 155. In this position the spring 208 is compressed and protrusion 207 is retracted into wall 212. As shown in Fig. 6B, when lid is fully closed, ribbed surface 206 of catch assembly is shown in the retracted or normal position moved along the X axis toward lid 155. In this position the spring 208 is extended and protrusion 207 is position in cavity 205 holding lid 155 in the secure position.

While the disclosure has been described in terms of exemplary embodiments, those skilled in the art will recognize that the disclosure can be practiced with modifications in the spirit and scope of the appended claims. These examples are merely illustrative and are not meant to be an exhaustive list of all possible designs, embodiments, applications or modifications of the disclosure.

CLAIMS

I claim:

1. An electrical receptacle cover, comprising:

A cover base, configured to be affixed to an electrical receptacle assembly, including a base surface having at least one opening configured to be aligned with an electrical receptacle of the electrical receptacle assembly; the cover base including a base wall disposed about and extending from a perimeter of the base surface; the base surface and the base wall together defining a base cavity;

A cover lid interconnected with the cover base and moveable, via a hinge, from an open position, in which the base cavity is exposed, to a closed position in which the base cover is substantially disposed within the base cavity.

2. The electrical receptacle of claim 1 wherein the cover base is rectangular in shape and the base wall comprises first and second opposing side wall segments and first and second opposing end wall segments.

3. The electrical receptacle of claim 1 wherein the hinge of the cover lid is integrated within the first side wall segment and at least one recess is formed in a top surface of the second opposing side wall segment; the at least one recess is configured to receive a protrusion extending from an edge of the cover lid when the cover lid is in the closed position; the protrusion being accessible by a user inserting a finger into the recess to lift the cover from the closed position to the open position.

4. The electrical receptacle of claim 3 wherein the cover lid comprises two cover lid sections, each cover lid section being interconnected with the cover base and independently moveable, via a hinge, from an open position, in which a respective portion of the base cavity is exposed, to a closed position, in which the cover lid section is substantially disposed within the respective portion of the base cavity.

5. The electrical receptacle of claim 3 wherein when the cover lid is in the closed position a top surface of the cover lid is flush with the top surface of the second opposing side wall segment and a top surface of each of the first and second end walls.

6. The electrical receptacle of claim 4 wherein a portion of the first side wall segment includes at least one opening in which a first end of the hinge is disposed and the cover lid includes a portion which covers the at least one opening when the cover lid is in the closed position.

7. The electrical receptacle of claim 6 wherein when each of the two cover lid sections is in the closed position a top surface of each cover lid section is flush with the top surface of the second opposing side wall segment and a top surface of one of the first and second end walls.

8. The electrical receptacle of claim 7 wherein a portion of the first side wall segment includes at least one opening for each of the two cover lid sections in which a first end of the hinge is of the respective cover lid section is disposed and each of the cover lid sections includes a portion which covers the respective opening when the cover lid section is in the closed position.

9. The electrical receptacle of claim 2 wherein a portion of the first side wall segment includes a latch mechanism to receive and engage with a striker assembly on the cover lid when the cover lid is closed to secure it to the cover base.

10. The electrical receptacle of claim 9 wherein the latch mechanism includes a protrusion and the striker assembly includes a cavity and wherein when the lid is in the closed position, the protrusion of the catch assembly is positioned in the cavity of the striker to secure the cover lid in the closed position.

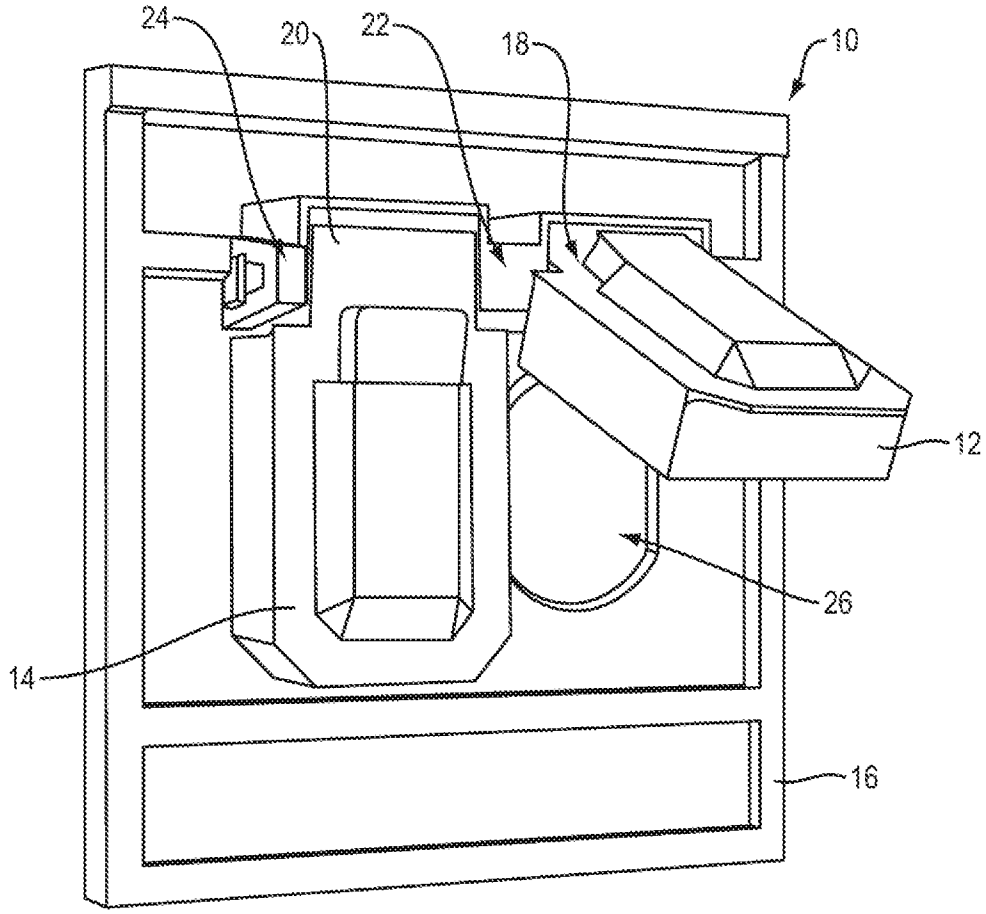

FIG. 1
(PRIOR ART)

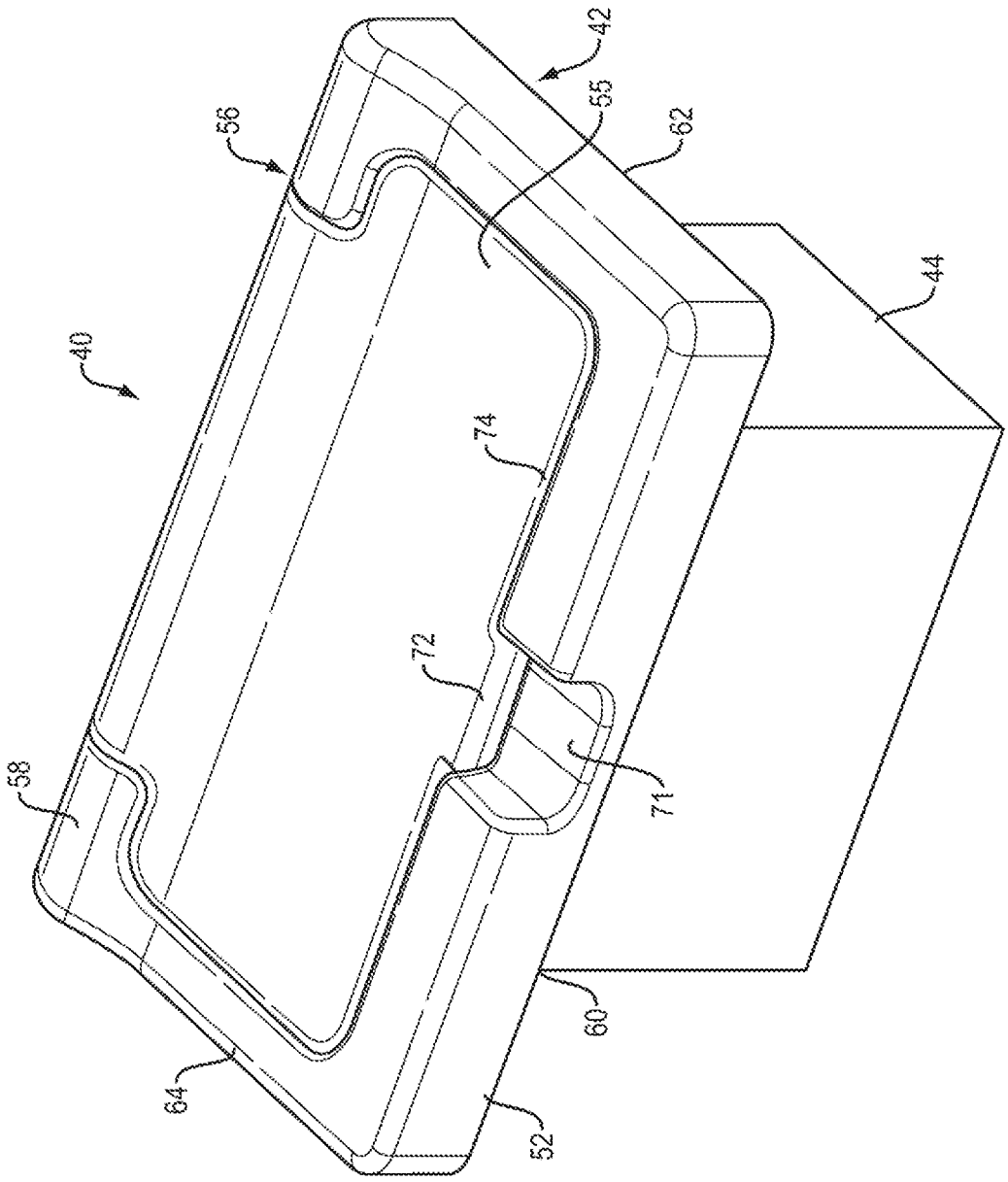

FIG. 2A

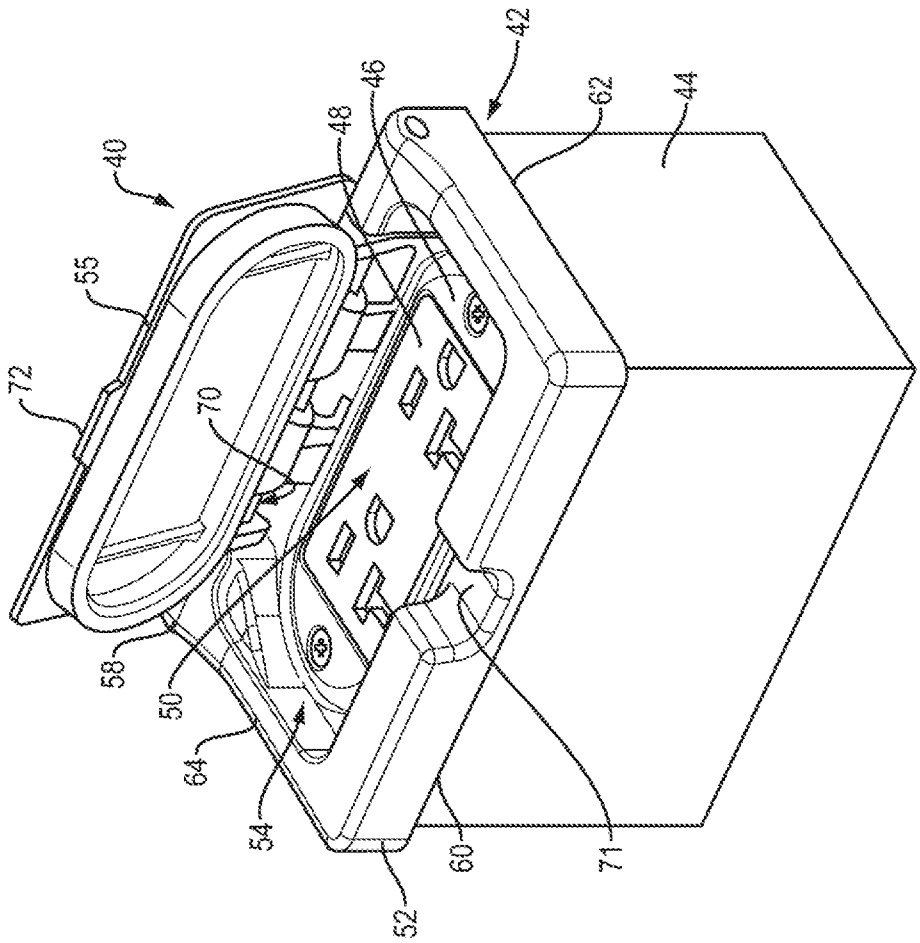

FIG. 2B

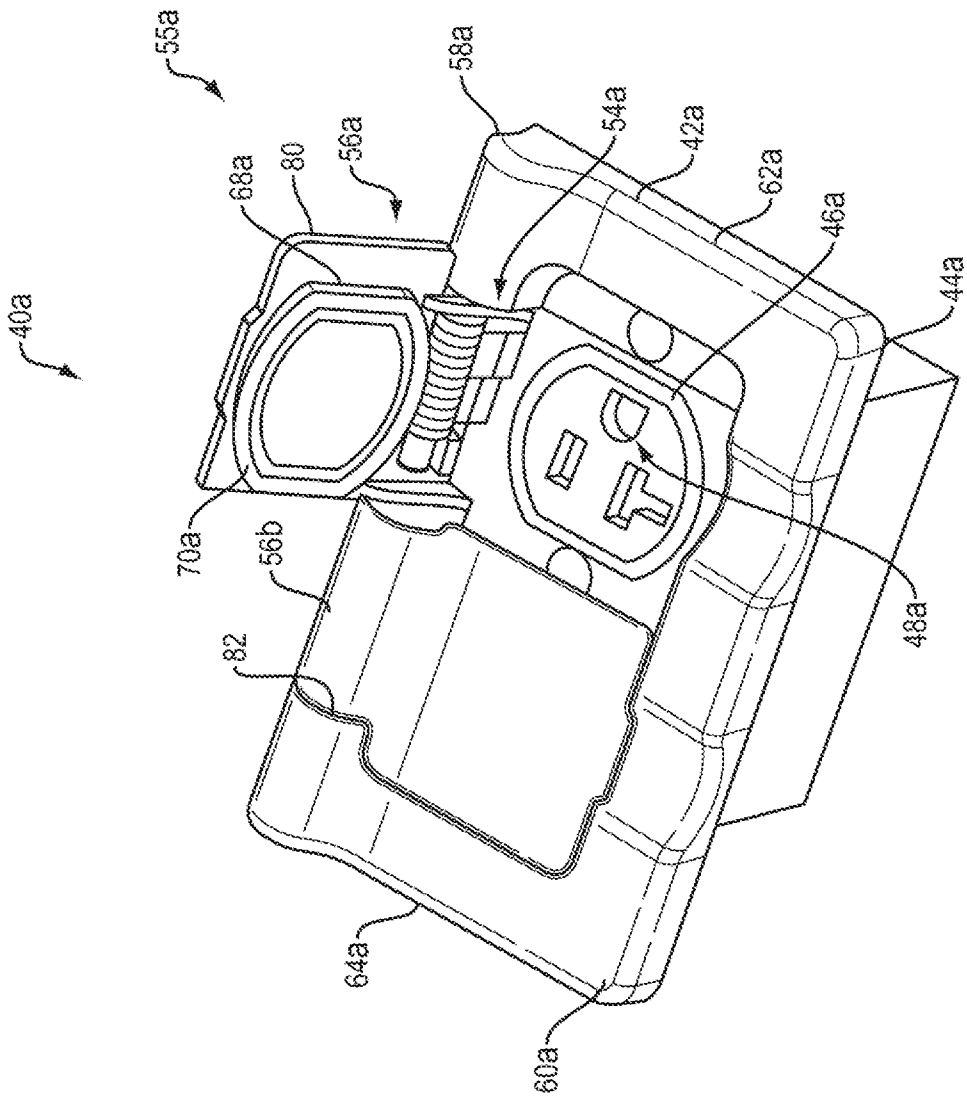

FIG. 3

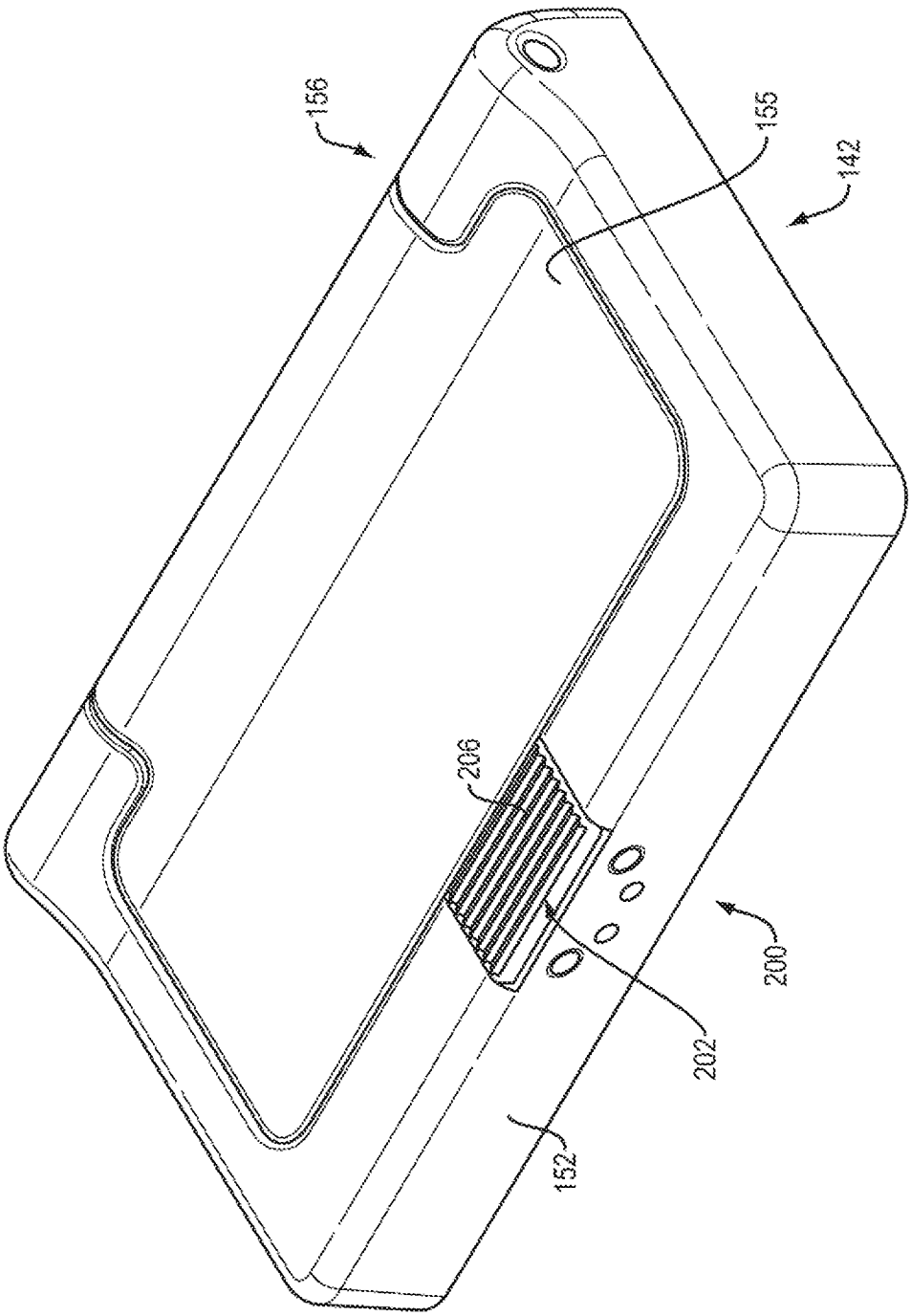

FIG. 4A

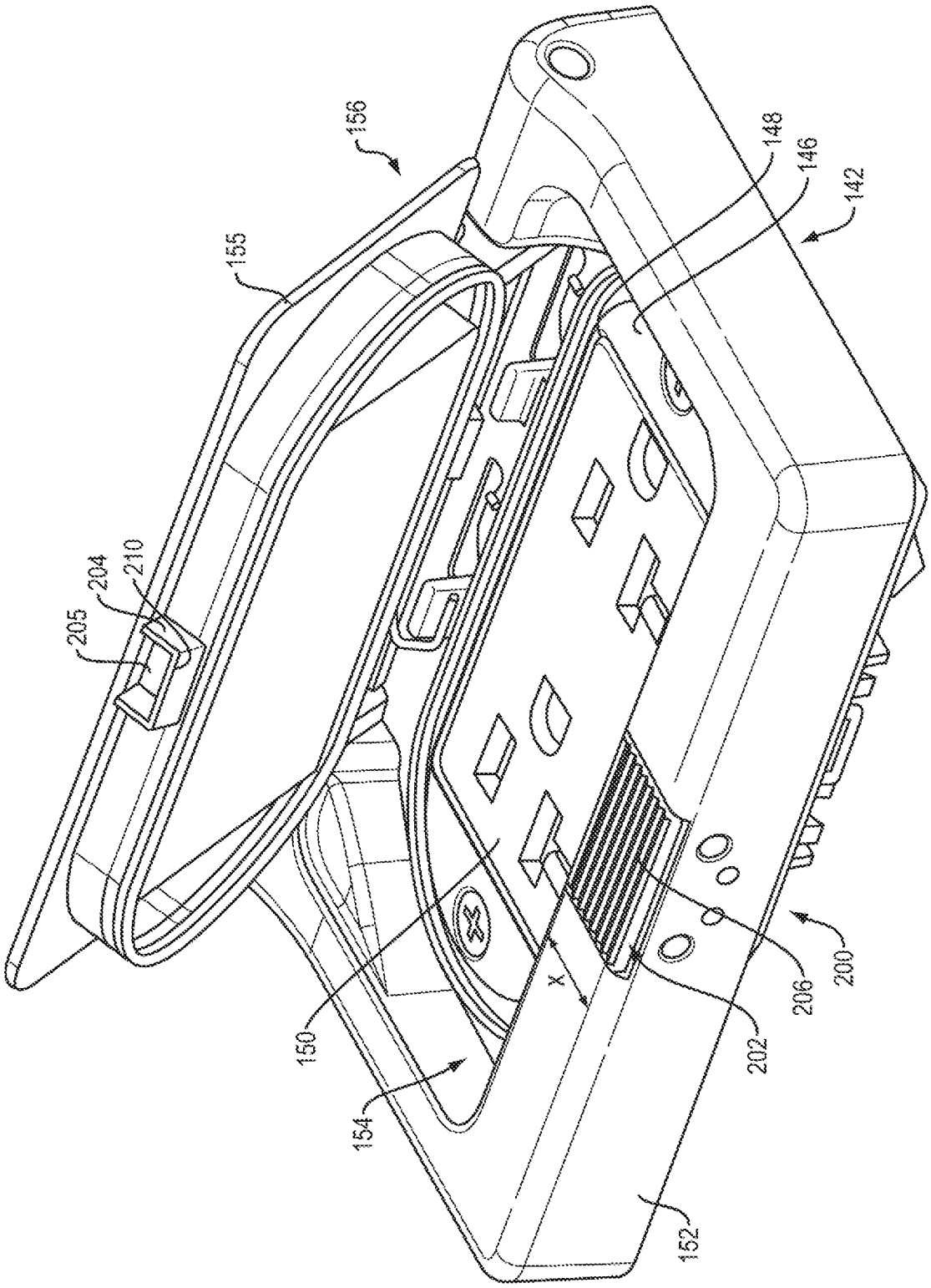

FIG. 4B

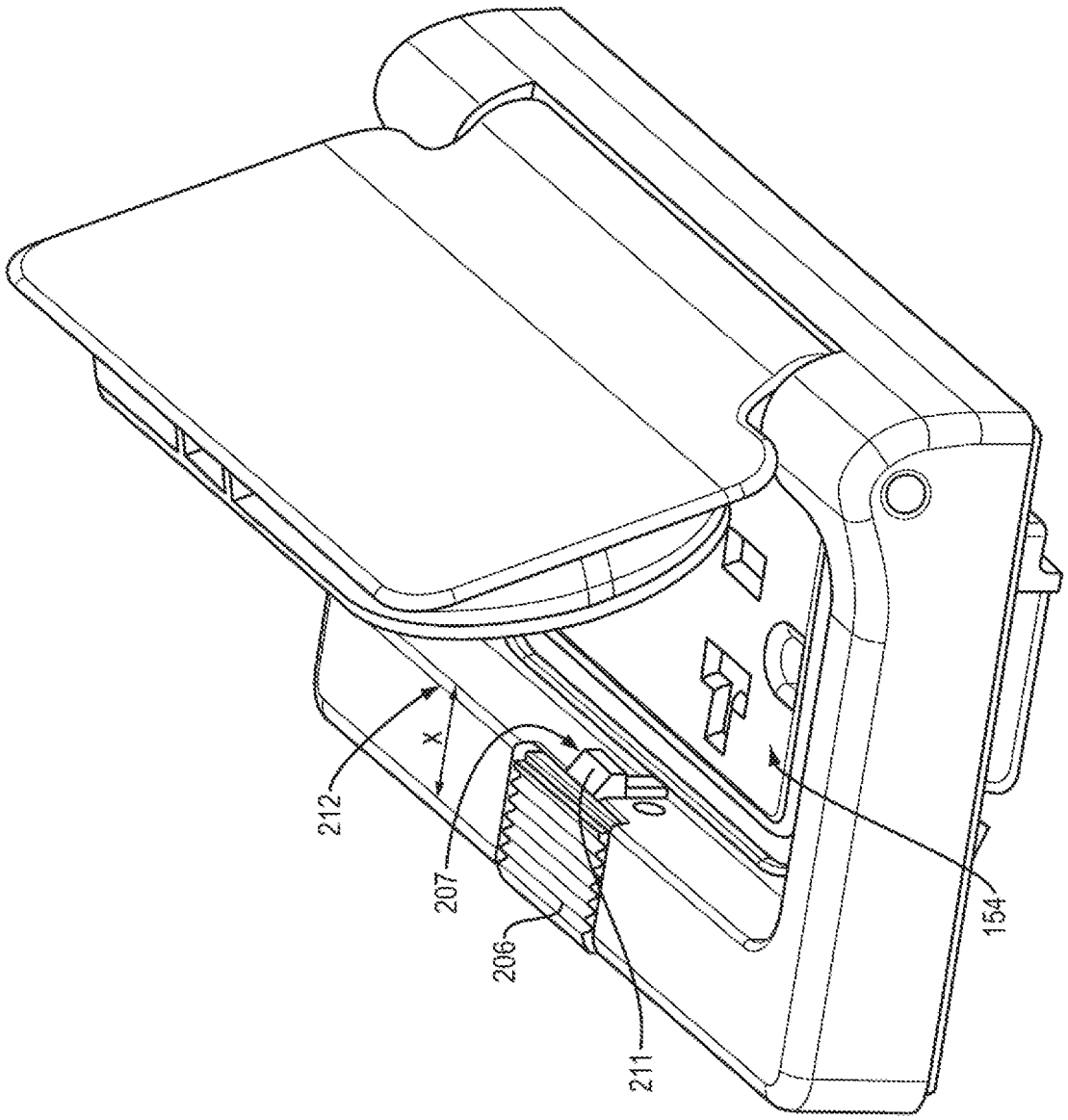

FIG. 5

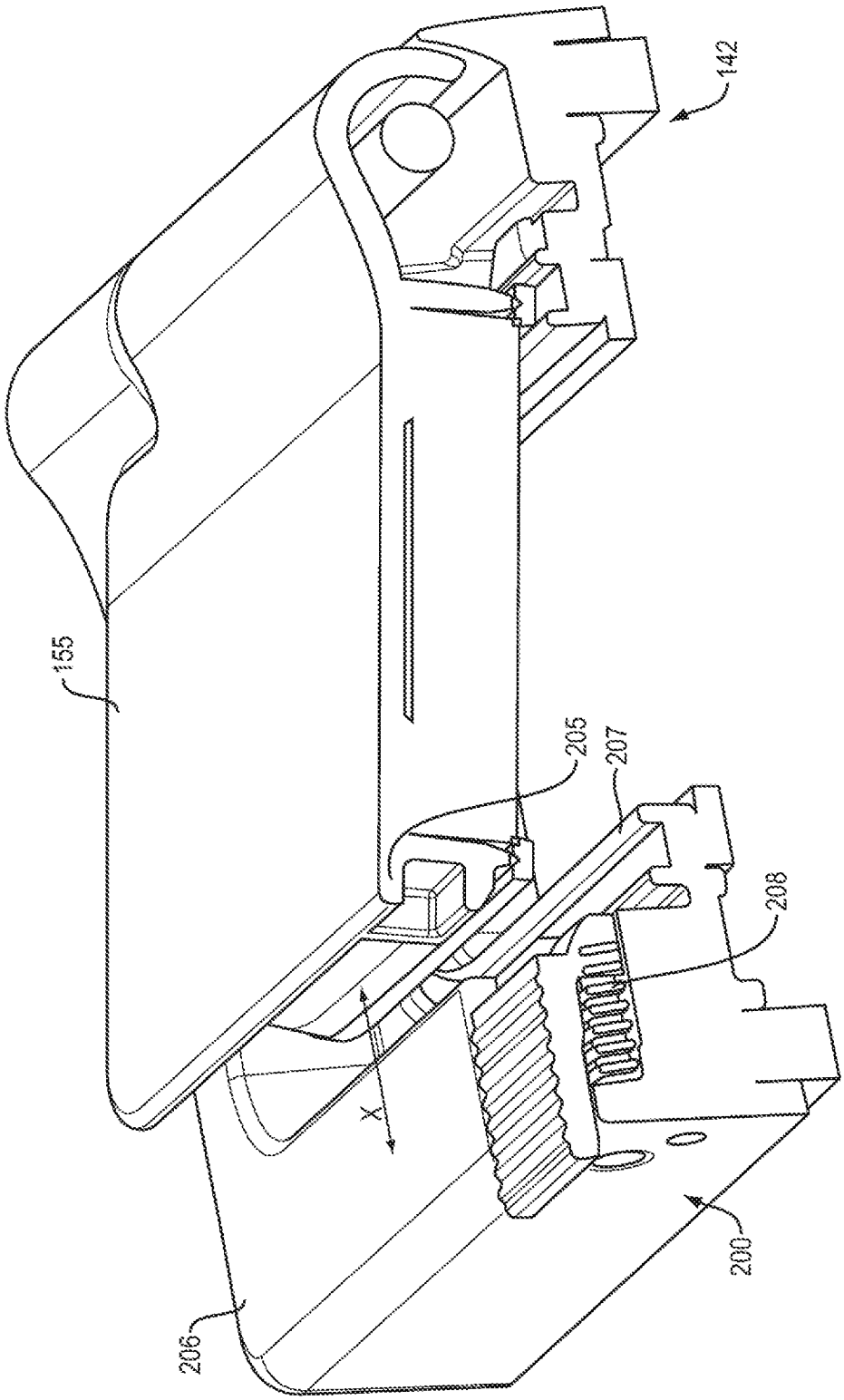

FIG. 6A

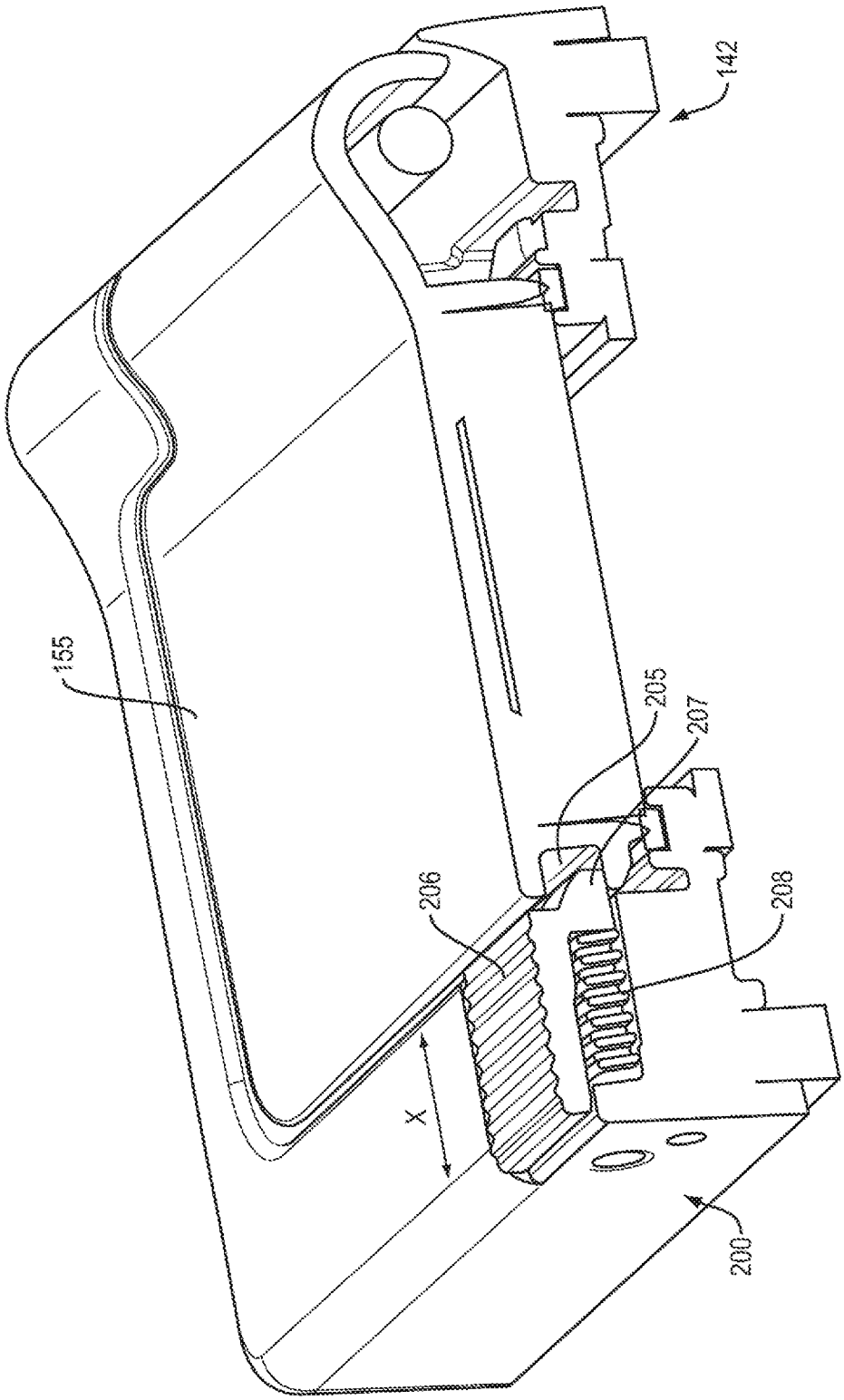

FIG. 6B

INTERNATIONAL SEARCH REPORT

International application No.
PCT/US 19/55148

A. CLASSIFICATION OF SUBJECT MATTER

IPC - H02G 3/08, H02G 3/10, H02G 3/14, B65D 1/24, B65D 1/36 (2019.01)

CPC - H01H 21/085, H01R 13/5213, H01R 13/652, H01R 24/78, H01R 2103/00, H02G 3/081, H02G 3/088, H02G 3/14, H02G 3/123

According to International Patent Classification (IPC) or to both national classification and IPC

B. FIELDS SEARCHED

Minimum documentation searched (classification system followed by classification symbols)
See Search History document

Documentation searched other than minimum documentation to the extent that such documents are included in the fields searched
See Search History document

Electronic data base consulted during the international search (name of data base and, where practicable, search terms used)
See Search History document

C. DOCUMENTS CONSIDERED TO BE RELEVANT

Category*	Citation of document, with indication, where appropriate, of the relevant passages	Relevant to claim No.
X	US 4,505,403 A (BOWDEN, JR. et al.) 19 March 1985 (19.03.1985), entire document	1-8
X	US 9,935,436 B1 (BALDWIN) 03 April 2018 (03.04.2018), entire document	1-2, 9-10
A	US 2008/0179072 A1 (DRANE et al.) 31 July 2008 (31.07.2008), entire document	1-10
A	US 7,265,292 B2 (GREENFIELD) 04 September 2007 (04.09.2007), entire document	1-10
A	US 2015/0041467 A1 (HUBBELL INCORPORTATED et al.) 12 February 2015 (12.02.2015), entire document	1-10
A	US 8,410,363 B1 (BALDWIN et al.) 02 April 2013 (02.04.2013), entire document	1-10
A	US 2010/0000757 A1 (HUSAIN et al.) 07 January 2010 (07.01.2010), entire document	1-10
A	US 2009/0266574 A1 (ATKINSON et al.) 29 October 2009 (29.10.2009), entire document	1-10
A	US 4,660,912 A (TOMEK) 28 April 1987 (28.04.1987), entire document	1-10
A	US 4,381,063 A (LEONG) 26 April 1983 (26.04.1983), entire document	1-10
A	US 4,134,516 A (SULLO) 16 January 1979 (16.01.1979), entire document	1-10
A	US 2008/0264664 A1 (DINH et al.) 30 October 2008 (30.10.2008), entire document	1-10

☐ Further documents are listed in the continuation of Box C. ☐ See patent family annex.

* Special categories of cited documents:
"A" document defining the general state of the art which is not considered to be of particular relevance
"D" document cited by the applicant in the international application
"E" earlier application or patent but published on or after the international filing date
"L" document which may throw doubts on priority claim(s) or which is cited to establish the publication date of another citation or other special reason (as specified)
"O" document referring to an oral disclosure, use, exhibition or other means
"P" document published prior to the international filing date but later than the priority date claimed
"T" later document published after the international filing date or priority date and not in conflict with the application but cited to understand the principle or theory underlying the invention
"X" document of particular relevance; the claimed invention cannot be considered novel or cannot be considered to involve an inventive step when the document is taken alone
"Y" document of particular relevance; the claimed invention cannot be considered to involve an inventive step when the document is combined with one or more other such documents, such combination being obvious to a person skilled in the art
"&" document member of the same patent family

Date of the actual completion of the international search	Date of mailing of the international search report
13 NOVEMBER 2019	23 DEC 2019
Name and mailing address of the ISA/US Mail Stop PCT, Attn: ISA/US, Commissioner for Patents P.O. Box 1450, Alexandria, Virginia 22313-1450 Facsimile No. 571-273-8300	Authorized officer Lee Young Telephone No. PCT Helpdesk: 571-272-4300