J. B. F. SHOWALTER.

ADJUSTABLE ROOF BRACKET.

APPLICATION FILED DEC. 7, 1918.

1,341,597. **Patented May 25, 1920.**

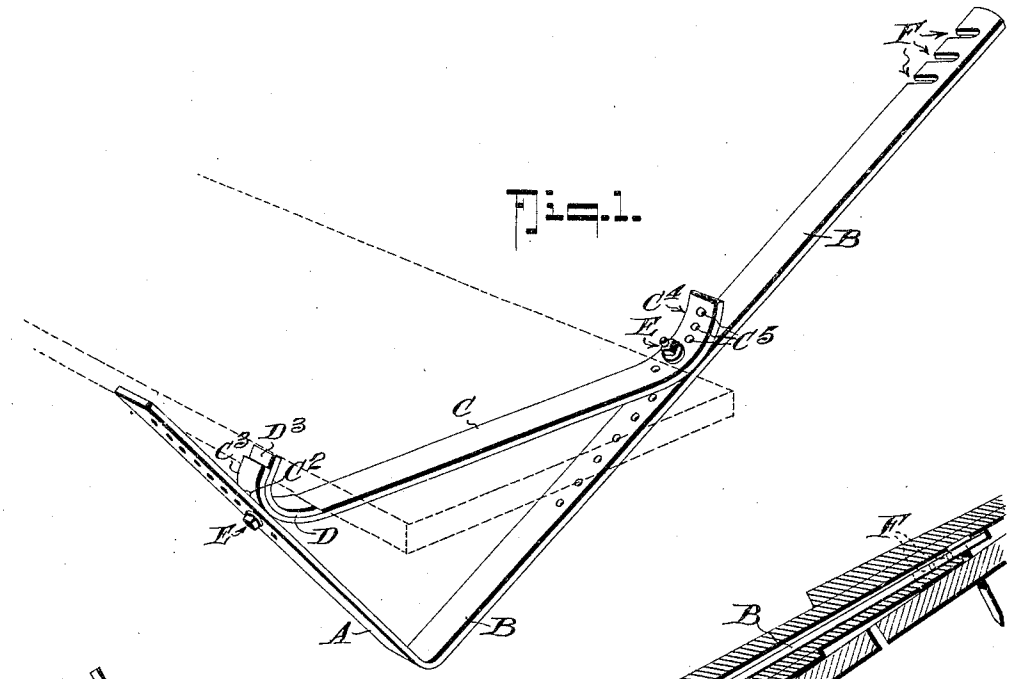

Fig. 1.

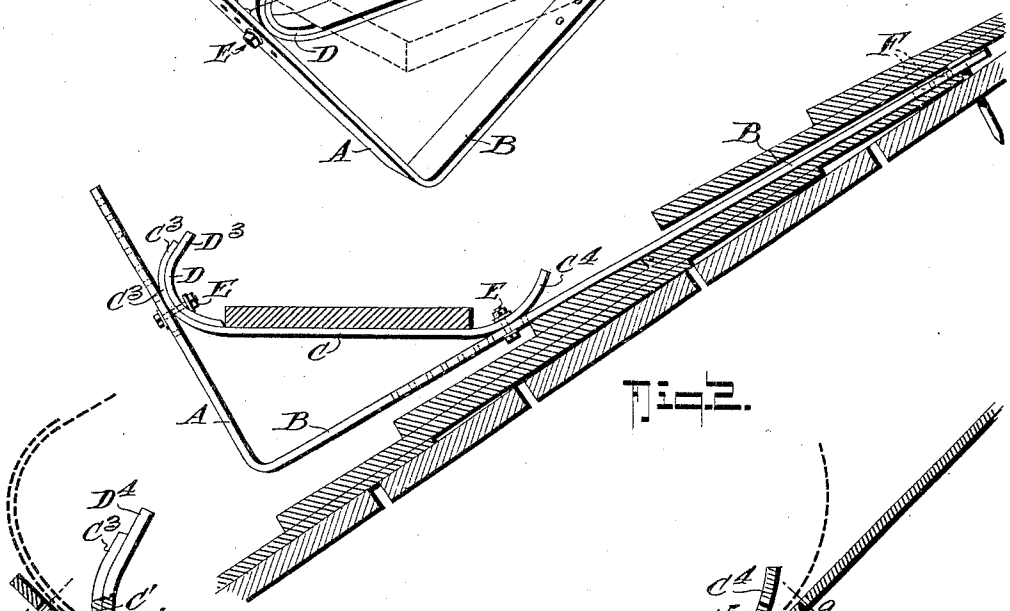

Fig. 2.

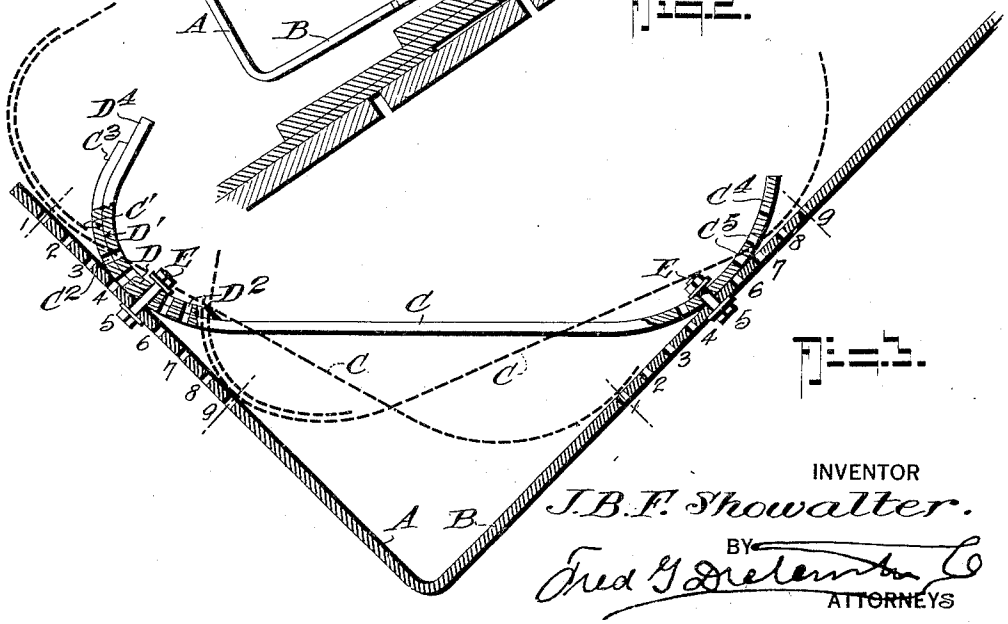

Fig. 3.

INVENTOR

J. B. F. Showalter.

BY

Fred G. Dieterich Co

ATTORNEYS

UNITED STATES PATENT OFFICE.

JAY B. F. SHOWALTER, OF PEKIN, ILLINOIS.

ADJUSTABLE ROOF-BRACKET.

1,341,597. Specification of Letters Patent. **Patented May 25, 1920.**

Application filed December 7, 1918. Serial No. 265,692.

To all whom it may concern:

Be it known that I, JAY B. F. SHOWALTER, residing at Pekin, in the county of Tazewell and State of Illinois, have invented certain new and useful Improvements in Adjustable Roof-Brackets, of which the following is a specification.

My invention has for its object to provide a safe and convenient roof bracket that can be adjusted to the various pitches of all kinds of roofs. In its general nature, the invention consists of a supporting body member in the form of a right angle with unequal legs and a brace portion curved at or near each end and adjustably secured at its ends to the respective legs whereby the position of the brace portion can be varied with relation to the angle of the supporting portion of the bracket to suit the inclination of the different roof pitches. The invention also includes the provision on the brace member of a curved hook-like outer end designed to prevent the scaffolding from slipping or sliding outwardly over the outer edge of the brace.

In its more detailed nature, the invention further includes a short shoe portion provided as a support to the brace member and attachable thereto with the same fastening that secures the brace member to the outer leg of the supporting member of the bracket.

In its more detailed nature the invention includes those novel details of construction, combination and arrangement of parts all of which will be first fully described, then be specifically pointed out in the appended claims and illustrated in the accompanying drawings, in which:—

Figure 1 is a perspective view illustrating the invention in use.

Fig. 2 is a cross section of the roof with the invention thereon in elevation.

Fig. 3 is an enlarged vertical section of a portion of the invention illustrating diagrammatically the various positions of adjustment of the brace member.

In the drawing, in which like numerals and letters of reference indicate like parts in all of the figures, A—B designate the supporting member which is preferably made of flat bar steel or other suitable metal, such as malleable castings, etc., and of suitable widths and thicknesses. The supporting member of the bracket consists of the short leg A and the long leg B projecting at right angles from one another. Each of the legs A—B has a definitely spaced series of apertures designated by the numerals 1, 2, 3, 4, etc., in the drawing to permit adjustment of the brace member C.

The brace member C also consists of a bar preferably of metal, the outer end of which is curved as at C′ and provided with a plurality of bolt holes C^2 and preferably terminating in a straight extension C^3.

The other end of the brace member C is curved as at C^4 and provided with a set of bolt holes C^5 for the purpose presently understood.

D designates the reinforcing shoe for the front or outer end of the brace member C and it is shaped to conform to the curvature of the outer end of the brace member C and to lie flat against the same, the shoe D having the curved portion D′ corresponding to the curved portion C′ and the straight portion D^3 corresponding to the similar portion C^3 of the brace member C. The shoe D also has bolt holes D^2 registering with the corresponding holes C^2 in the brace member.

E designates bolt and nut devices for securing the respective ends of the brace member C to the respective legs A—B of the supporting member.

The upper end of the long leg B of the supporting member is provided with diagonal slots F through the medium of which the bracket can be nailed to the roof (see Fig. 2) and by simply forcing the bracket upwardly in the direction of the length of the long leg the diagonal slots will enable the bracket to be unhooked from the nails without the necessity of pulling the same.

The curved ends C′ and C^4 of the brace member C are so designed with respect to their curvature that the brace member C can be placed at various angles with relation to the legs depending upon the pitch of the roof on which the bracket is used.

The holes 1, 2, 3, 4, 5, etc., are numbered in the reverse order with relation to the angle or corner of the member A—B, that is—hole numbered 1 on the long leg is the nearest to the corner while hole numbered 1 on the short leg is the farthest from the corner so that by putting the bolts E through correspondingly numbered holes and securing the brace member C to the legs A—B, the position of the brace member can be changed at will within the range of the number of holes provided.

It will be observed that by curving the outer end of the brace member C in the form of a bill or hook, it will form a convenient and safe means for holding the scaffolding in place and prevent the scaffolding from slipping or sliding downwardly or over the outer edge of the brace.

In practice, the brace or supporting member C of the bracket is moved from any one position to any other position desired simply by taking out the bolts E and slipping the ends of the brace up or down to any desired position of the brace portion, which is then securely bolted to the outer portion and thus made into a rigid and strong bracket for holding scaffolding and the men and materials that may be thereon.

The provision of the shoe D gives added strength where such may be necessary in cases where the bracket would otherwise be overloaded.

From the foregoing description taken in connection with the accompanying drawings, the construction, operation and advantages of my device will be readily understood by those skilled in the art.

What I claim is:

1. An adjustable roof bracket comprising a right angled body or supporting member having a long leg and a short leg, said legs having bolt holes correspondingly spaced from the corner of the body member, and a movable brace member having curved ends, in engagement with the respective legs and adjustably bolted thereto by bolts passing through said curved ends and through the leg apertures, and means for anchoring the long legs of the body member to the roof.

2. An adjustable roof bracket comprising an angled bar having a long leg and a short leg, a movable brace bar extending from one leg to the other and having curved ends, fastening devices adjustably securing the curved ends of said brace bar to the respective legs, the end of said movable brace member which engages the shorter leg being preferably hook shaped, and means whereby the long leg of the angle bar may be anchored to the roof.

3. An adjustable roof bracket comprising an angled bar having a long leg and a short leg, a movable brace bar extending from one leg to the other, fastening devices adjustably securing the ends of said movable brace bar to the respective legs, the end of said movable brace member which engages the shorter leg being preferably hook shaped, and a shoe in the curved or hook portion through which the fastening devices pass to secure the parts together, and means whereby the long leg of the angled bar may be anchored to the roof.

4. An adjustable roof bracket comprising an angled bar having a long leg and a short leg, a movable brace bar extending from one leg to the other, fastening devices adjustably securing the ends of said movable brace bar to the respective legs, the end of said movable brace member which engages the shorter leg being preferably hook shaped, a shoe in the curved or hook portion through which the fastening devices pass to secure the parts together, said hook and shoe having preferably straight end extensions (inclined backwardly) and means whereby the long leg of the angled bar may be anchored to the roof.

5. An adjustable roof bracket comprising an angled bar having a long leg and a short leg, a movable brace bar extending from one leg to the other, and having its ends curved, fastening devices adjustably securing the curved ends of said brace bar to the respective legs, a shoe in at least one of the curved ends of the brace bar through which shoe the fastening devices pass to secure the parts together and means whereby the long leg of the angled bar may be anchored to the roof.

6. An adjustable roof bracket comprising a flat angled bar having a long leg and a short leg, and a flat movable brace bar extending from one leg to the other and having curved legs, fastening devices adjustably securing the curved ends of said brace bar flatwise to the respective legs, the end of said movable brace member which engages the shorter leg being preferably hook shaped and means whereby the long leg of the angled bar may be anchored flatwise to the roof.

JAY B. F. SHOWALTER.