(12) INTERNATIONAL APPLICATION PUBLISHED UNDER THE PATENT COOPERATION TREATY (PCT)

(19) World Intellectual Property Organization
International Bureau

(43) International Publication Date
5 February 2015 (05.02.2015)

WIPO | PCT

(10) International Publication Number
WO 2015/015399 A1

(51) International Patent Classification:
B65D 85/10 (2006.01)

(21) International Application Number:
PCT/IB2014/063480

(22) International Filing Date:
28 July 2014 (28.07.2014)

(25) Filing Language: Italian

(26) Publication Language: English

(30) Priority Data:
BO2013A000416 31 July 2013 (31.07.2013) IT

(71) Applicant: **G. D S.P.A.** [IT/IT]; Via Battindarno, 91, I-40133 Bologna (IT).

(72) Inventor: **NEGRINI, Stefano**; Via Longarola, 21, I-40012 Calderara Di Reno (Bologna) (IT).

(74) Agent: **BIANCIARDI, Ezio**; Via di Corticella, 87, I-40128 Bologna (IT).

(81) Designated States *(unless otherwise indicated, for every kind of national protection available)*: AE, AG, AL, AM, AO, AT, AU, AZ, BA, BB, BG, BH, BN, BR, BW, BY, BZ, CA, CH, CL, CN, CO, CR, CU, CZ, DE, DK, DM, DO, DZ, EC, EE, EG, ES, FI, GB, GD, GE, GH, GM, GT, HN, HR, HU, ID, IL, IN, IR, IS, JP, KE, KG, KN, KP, KR, KZ, LA, LC, LK, LR, LS, LT, LU, LY, MA, MD, ME, MG, MK, MN, MW, MX, MY, MZ, NA, NG, NI, NO, NZ, OM, PA, PE, PG, PH, PL, PT, QA, RO, RS, RU, RW, SA, SC, SD, SE, SG, SK, SL, SM, ST, SV, SY, TH, TJ, TM, TN, TR, TT, TZ, UA, UG, US, UZ, VC, VN, ZA, ZM, ZW.

(84) Designated States *(unless otherwise indicated, for every kind of regional protection available)*: ARIPO (BW, GH, GM, KE, LR, LS, MW, MZ, NA, RW, SD, SL, SZ, TZ, UG, ZM, ZW), Eurasian (AM, AZ, BY, KG, KZ, RU, TJ, TM), European (AL, AT, BE, BG, CH, CY, CZ, DE, DK, EE, ES, FI, FR, GB, GR, HR, HU, IE, IS, IT, LT, LU, LV, MC, MK, MT, NL, NO, PL, PT, RO, RS, SE, SI, SK, SM, TR), OAPI (BF, BJ, CF, CG, CI, CM, GA, GN, GQ, GW, KM, ML, MR, NE, SN, TD, TG).

[Continued on next page]

(54) Title: PACKET FOR SMOKER'S ARTICLES, IN PARTICULAR CIGARETTES.

FIG.4

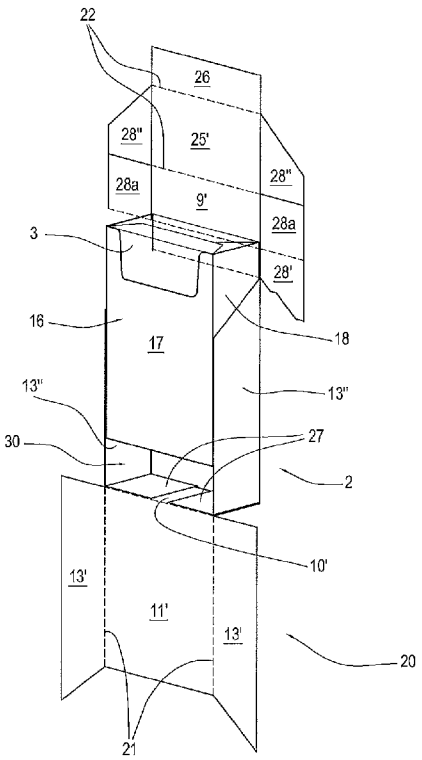

(57) Abstract: Described is a packet for cigarettes housing one or two layers of cigarettes of reduced length and/or cigarettes of reduced length and reduced diameter, in particular of the "slim" or "superslim" type, comprising an outer container (2), an inner wrapper (3) contained in the outer container (2) and housing a group (4) of cigarettes (5), a box-shaped body (16) which is associated with the outer container (2) and obtained from a blank made from sheet material, in particular paper; the blank from which the box- shaped body (16) is obtained comprises a front panel (17) and a bottom panel (32) connected along a first connecting edge (31), a first pair of side flaps (34) connected to the bottom panel (32) along a second connecting edge (33) and a second pair of side flaps (36), connected to the first pair of side flaps (34) along a third connecting edge (35), the first (31), second (33) and third (35) connecting edges being lines of weakness (31, 33, 35) about which the panels and the flaps (17, 32, 34, 36) connected can be reciprocally folded by 90°; the front panel (17) and the second pair of side flaps (36) being reciprocally released before assembly of the box-shaped body (16) and being reciprocally superposed and fixed by gluing to the assembly of the box-shaped body (16); the box-shaped body (16) is positioned inside a portion of the outer container (2) spaced by a stretch of predetermined length from a base of the outer container (2) defined by a bottom wall (10) of the outer container (2); the box-shaped body (16) being fixed by gluing to the outer container (2) in such a way as to keep the inner wrapper (3) raised relative to the base of the outer container (2).

WO 2015/015399 A1

Published:

— *with international search report (Art. 21(3))*

DESCRIPTION

Packet for smoker's articles, in particular cigarettes.

Technical field

This invention relates to a packet for smoker's articles, in particular cigarettes.

More specifically, this invention relates to a packet which can be used to contain smoker's articles and having certain measures for facilitating the folding and the gluing of flaps which are part of at least a blank from which the packet is made.

In the description which follows, reference is made, by way of example and for convenience of description, to smoker's articles consisting of cigarettes without limiting the scope of the invention.

Background art

In the production of packets of cigarettes having thicknesses less than those of the dimensions containing three superposed layers of cigarettes, or in the packets which are associated with, inside or outside, small box-shaped bodies of additional cardboard, closed or open and designed to house, for example, filters or matches, the blanks used normally comprise flaps having a very small width, which must be folded about lines of weakness which join them to the remaining portion of the blanks and they must then be glued to predetermined zones of the blanks.

There are also prior art packets of cigarettes designed for receiving cigarettes having a length less than the length of the packets. Inside these packets there are usually box-shaped bodies having the purpose of a filler, positioned at the bottom of the packets for occupying a portion of space between the base of the packets and a group of cigarettes wrapped in an overwrapping sheet. The blanks which constitute the box-shaped bodies are usually equipped with flaps which are not very wide.

Examples of packets of this kind can be seen, for example, in patent

documents US5480025-A, GB1086725-A, GB2236737-A, US4989728-A, DE3311810-A1 and USD545493-S1.

The folding of the above-mentioned flaps, and even more so their gluing, is difficult due to the reduced width of the flaps, on a surface on which there is a small film of glue. It is therefore not uncommon that, in the packets formed, one or more folded flaps occupy imperfect positions, and they sometimes detach from the surface to which they adhere since the reduced size of their glued surface does not allow a perfect and stable gluing.

Disclosure of the invention

The aim of this invention is to provide a packet for smoker's articles, in particular cigarettes, which is free of the disadvantages described above with reference to the prior art.

The invention accordingly provides a packet for smoker's articles, in particular cigarettes, as set out in the appended claims.

Brief description of the drawings

The invention will now be described with reference to the accompanying drawings which illustrate a non-limiting embodiment of it and in which:

- Figure 1 is a perspective view of a cigarette packet made in accordance with this invention;
- Figures 2 and 3 show two variant embodiments of a blank which can be used to make the cigarette packet of Figure 1;
- Figure 4 shows the packet of Figure 1 partly formed;
- Figures 5 and 6 show, respectively, a blank which can be used to make a first embodiment of a collar which can be associated with the packet of Figure 1 and the folded collar obtained from this blank;
- Figures 7 and 8 show, respectively, a blank which can be used to make a second embodiment of a collar which can be associated with the packet of Figure 1 and the folded collar obtained from this blank;

- Figures 9 and 10 show, respectively, a blank which can be used to make a third embodiment of a collar which can be associated with the packet of Figure 1 and the folded collar obtained from this blank;
- Figures 11-14 show four further embodiments of a collar which can be housed inside the packet of Figure 1; and
- Figures 15-22 show, in respective pairs of consecutive figures representing, respectively, a plan view and an axonometric view, four further embodiments of a collar which can be housed inside the packet of Figure 1.

Detailed description of the preferred embodiments of the invention

In Figure 1 the numeral 1 denotes in its entirety a hard, hinged-lid cigarette packet comprising (at least) a hollow outer container 2 made of stiff card or paperboard and (at least) an inner wrapper 3 housed inside the container 2. The inner wrapper 3 encloses a group 4 of cigarettes 5 and is made, for example, of metallized paper. The group 4, illustrated in the figure by way of example, has a substantially parallelepiped shape.

The outer container 2 has an open top end 6 and is provided with a hollow lid 7 joined to the container 2 along a hinge 8 allowing it to rotate relative to the container 2 itself between an open position (illustrated in Figure 1) and a closed position (not illustrated) where the open top end 6 is closed.

The lid 7 has a top wall 9, a rear wall 24 and a front wall 25 which are parallel with and opposite each other, and two side walls 28 which are parallel with and opposite each other.

The lid 7, when it is in the closed position, gives the outer container 2 the shape of a rectangular parallelepiped defined by a top wall 9 (coinciding with the top wall of the lid 7) and a bottom wall 10 which are parallel and opposite to each other, two large side walls 11 and 12 which are parallel and opposite to each other and two small side walls 13 which are parallel and opposite to each other. More specifically, one of the large side walls, labelled 11, constitutes the front wall of the outer container 2, whilst the

other large side wall, labelled 12, defines the rear wall of the outer container 2, and the bottom wall 10 constitutes the base of the outer container 2.

The packet 1 of Figure 1 also comprises (at least) a box-shaped body 16 partly open inside, obtained from a flat blank made of sheet material, of a flexible laminar type, in particular made of paper such as cardboard or paperboard; the blank may be made from a continuous web wound on a roll.

At least part of the box-shaped body 16 comprises a collar, which is folded into a "U" and fixed (normally by gluing) inside the outer container 2 in such a way as to protrude partly from the open top end 6 and engage a corresponding inner surface of the lid 7 when the lid 7 is in the above-mentioned closed position; the collar comprises a front wall 17, which is positioned in contact with the front wall 11 of the outer container 2, and two side walls 18, which are located on opposite sides of the front wall 17 and are positioned in contact with the smaller side walls 13 of the outer container 2.

In one preferred embodiment, the folded collar has a pair of tabs 19 which protrude laterally to engage the side walls of the lid 7 by interference in such a way as to keep the lid 7 stable when it is in the closed position.

As illustrated, in particular in Figure 2, the outer container 2 of Figure 1A is obtained from a flat blank 20 made from sheet material, which has a substantially rectangular, elongate shape and whose parts are, where possible, denoted by primed reference numerals which are the same as the reference numerals denoting the corresponding parts of the outer container 2.

The blank 20 has two longitudinal lines of weakness 21 and a plurality of transversal lines of weakness 22; the two longitudinal lines of weakness 21 define, between adjacent pairs of transversal lines of weakness 22, a panel 11' which forms the front wall 11 (also defined as larger side wall) of the outer container 2, a panel 10' which forms the bottom wall 10 of the

outer container 2, a panel 12' which forms the rear wall 12 (also defined as larger side wall) of the outer container 2, a panel 24' which forms the rear wall 24 of the lid 7 (the hinge 8 coincides with a transversal line of weakness 22), a panel 9' which forms the top wall 9 of the lid 7, a panel 25' which forms the front wall 25 of the lid 7, and an inner panel 26 which constitutes a reinforcing flap of the front wall 25 of the lid 7.

The panel 11' bears a pair of side flaps 13', which form an outer portion of the smaller side walls 13 of the outer container 2, which are located on opposite sides of the panel 11' and are joined to the panel 11' itself by the longitudinal lines of weakness 21.

The panel 12' bears a pair of side flaps 13', which form an inner portion of the smaller side walls 13 of the outer container 2, which are located on opposite sides of the panel 12' and are joined to the panel 12' itself by the longitudinal lines of weakness 21. Each flap 13" is connected, along a transversal line of weakness 22, to an inner reinforcement tab 27 for the bottom wall 10 of the outer container 2.

The panel 24' bears a pair of side flaps 28', which form an inner portion of the side walls 28 of the lid 7, which are located on opposite sides of the panel 24' and are joined to the panel 24' itself by the longitudinal lines of weakness 21. Each side flap 28' is connected, along a transversal line of weakness 22, to an inner reinforcement tab 28a for the top wall 9 of the lid 7.

The panel 25' bears a pair of side flaps 28', which form an outer portion of the side walls 28 of the lid 7, which are located on opposite sides of the panel 25' and are joined to the panel 25' itself by the longitudinal lines of weakness 21.

The above-mentioned box-shaped body 16 is fixed by gluing to the surfaces of the front wall 11 and the side walls 13 inside the outer container 2 during formation of the packet 1, and runs alongside the front and side of part of the inner wrapper 3 which encloses the group 4 of cigarettes 5. In this context, the function of the box-shaped body 16 is

advantageously that of allowing the stable containment of cigarettes 5 which are shorter than the height of the packet 1.

The embodiment illustrated in Figure 3 of the blank from which the outer container 2 is made, denoted by the reference numeral 20', differs from the shape of the flat blank 20 of Figure 2 only in that a reinforcement tab 29 of the front wall 11 of the outer container 2 is connected, by a transversal line 22 of weakness, to the edge of the panel 11' opposite the panel 10' defining the bottom wall 10 of the outer container 2.

As already mentioned, as shown in Figure 4, an inner wrapper 3 containing a group 4 (not illustrated in Figure 4) of cigarettes 5 having a length less than that of the packet 1 can be partly enclosed in the box-shaped body 16, and can be placed in contact with the panel 12' which forms the rear wall 12 of the outer container 2 in such a way as to define an empty space 30 between the bottom of the inner wrapper 3 and the flaps 27 placed next to the panel 10' constituting the bottom wall 10 of the outer container 2.

In other words, the box-shaped body 16 is positioned inside a portion of the outer container 2 spaced by a stretch of predetermined length from the base of the outer container 2; the box-shaped body 16 being fixed by gluing to the outer container 2 in such a way as to keep the inner wrapper 3 raised relative to the bottom wall 10 of the outer container 2.

Figure 5 shows, respectively, in a flattened form and in an assembled form, a first embodiment of a collar made in accordance with this invention and denoted in its entirety by the numeral 16', the parts of which are denoted by the same reference numerals which denote the corresponding parts of the box-shaped body 16.

The collar 16' comprises a front panel 17 having at the top of it a central recess 17', which in use is positioned in contact with the inner surface of the packet 1 of the front wall 11 of the outer container 2, and its upper portion 18 comprises two side panels, joined to the panel 17 by respective lines of weakness 18', which are only on an upper portion of the collar 16',

are located on opposite sides of the front panel 17 and, in use, are located in contact with the inner surfaces of the packet 1 of respective smaller side walls 13 of the outer container 2 itself.

The collar 16 has a pair of tabs 19 which protrude laterally from the front panel 17 to engage the side walls 28 of the lid 7 by interference in such a way as to keep the lid 7 in the closed position.

A horizontal lower edge of the front panel 17 is connected, by a line of weakness 31, to a bottom panel 32, which is rectangular in shape and has a width equal to the width of the front panel 17 measured parallel to the line of weakness 31; the vertical side edges of the panel bottom 32 are connected, by respective lines of weakness 33, to respective rectangular flaps 34 the lateral dimensions of which, added to that of the panel 32, correspond to the lateral dimensions of the panel 17 added to those of the side panels 18.

A horizontal upper edge of each flap 34 is connected, through a line of weakness 35, to a further rectangular flap 36, extending upwards until running alongside the bottom edge of a respective side panel 18 above it.

As shown in Figure 6, the collar 16', folded and ready to be placed next to an inner wrapper 3 containing a group 4 of cigarettes 5 and next to a portion of the inner surface of an outer container 2, is obtained by firstly folding squarely the panel 31 about the line of weakness 32 which separates it from the front panel 17, whilst maintaining the coplanarity between the panel 32 and the flaps 34 connected to it and the flaps 36 and arranging the panel 32 and flaps 34 on a first side relative to the panel 17; then folding squarely the flaps 34 towards the front panel 17 about the relative lines of weakness 33, maintaining the coplanarity between the flaps 34 and the flaps 36 adjacent to them; and lastly folding squarely the flaps 36 about the lines of weakness 35 which they delimit, causing the flaps 36 to adhere, and to glue using traces of glue not illustrated, to a second side of the panel 17 opposite the first side. The side panels 18 are folded by an angle of 90° about the lines of weakness 18' which join them

to the panel 17, in such a way that, in use, they are situated in contact with the inner surfaces of the smaller side walls 13 of the outer container 2.

In other words, the blank which defines the collar 16' from which the box-shaped body 16 is obtained comprises a front panel 17 and a bottom panel 32 connected along a first connecting edge 31, a first pair of side flaps 34 connected to the bottom panel 32 along a second connecting edge 33 and a second pair of side flaps 36, connected to the first pair of side flaps 34 along a third connecting edge 35, the first 31, second 33 and third 35 connecting edges being lines of weakness 31, 33, 35 about which the panels and the flaps 17, 32, 34, 36 connected can be reciprocally folded by 90°; the front panel 17 and the second pair of side flaps 36 being reciprocally released before assembly of the box-shaped body 16 and being reciprocally superposed and fixed by gluing to the assembly of the box-shaped body 16.

It should be noted that the front panel 17, the side panels 18, the rectangular panel 32, the flaps 34 and the flaps 36 of the collar 16' are located at, and constitute, respectively, the front wall 17, the side walls 18, a bottom wall 32, two side walls 34 and two elements 36 for fixing the box-shaped body 16.

In general, as described above, the assembled collar 16' (that is, the box-shaped body 16) has at least one set of four walls 17, 32, 34, 36 (two are present in the collar 16'), and at least one vertex V in which three corners of the collar 16' converge, defined by three of the walls 17, 32, 34, which are positioned perpendicular to each other in pairs. The walls 17, 32, 34, 36 of each set of four walls are connected together in consecutive pairs along respective edges, except for a first wall 17 and a last wall 36, and in each of these pairs two walls 17, 32; 32, 34; 34, 36 are reciprocally joined by a line of weakness 31; 33; 35 about which the two walls 17, 32; 32, 34; 34, 36; can be reciprocally folded squarely to form, as part of the set of four walls 17, 32, 34, 36, a trihedron with vertex V; the first wall 17 and the last wall 36 of the set of four, before assembly of the relative collar 16', are

reciprocally released, and are reciprocally superposed and fixed by gluing during assembly. In many embodiments of this invention the box-shaped body 16 has two vertices V located at its bottom zone.

Moreover, as part of each set of four walls, a first wall 17 and a second wall 32 are connected together and reciprocally joined by a first line of weakness 31, the first wall 17 and the second wall 32 following along a first direction; a third wall 34 is connected to the second wall 32 and is joined to it by a second line of weakness 33, the second wall 32 and the third wall 34 following along a second direction perpendicular to the first direction; and the third wall 34 is connected to the last wall 36 and is joined to it by a third line of weakness 35, the third wall 34 and the last wall 36 following along a third direction parallel to the first direction. In use, the folded and assembled collar 16' has the three above-mentioned directions, identified by the three corners coinciding with the three lines of weakness 31, 33, 35 and converging in the vertex V of the trihedron, mutually perpendicular to each other in pairs.

The collar of Figures 7 and 8, denoted in its entirety by the numeral 16'', differs from the collar 16' in that the side panels 18 are not provided.

The collar of Figures 9 and 10, denoted in its entirety by the numeral 16''', differs from the collar 16' exclusively in that a lower edge of the panel 32 is connected, by a line of weakness 37, to the larger base of a further panel 32a with a substantially isosceles trapezoidal shape, which in the assembled collar 16''' is positioned folded at an angle of 180° about the line of weakness 37 and located in contact with the upper surface of the panel 32, in such a way as to strengthen it. Alternatively, in the assembled collar 16''' the panel 32a could be positioned folded in the manner described and located in contact with the bottom surface of the panel 32.

Each of Figures 11 and 12 show an inner box-shaped body partly open, defining a collar of special type, denoted respectively with the numerals 16'''' and 16V in Figures 11 and 12, which constitutes an alternative to the described collars 16', 16''and 16'''. The collars 16'''' and 16V are positioned

in the packet 1 in contact with the inner surface of the rear wall 12 of the outer container 2 and run alongside the rear and side of part of the inner wrapper 3 containing a group 4 of cigarettes 5.

The collar 16"" of Figure 11 comprises a central panel 23 that does not have at the top the above-mentioned central recess 17' of the collars 16', 16'' and 16''', which in use is positioned in contact with the inner surface of the packet 1 of the rear wall 12 of the outer container 2. The two sides of the upper portion of the collar 16"" are defined by respective side panels 18, connected to the central wall 23 by respective lines of weakness 38, only for an upper portion of the collar 16""; they are located on opposite sides of the central panel 23 and, in use, are located in contact with inner surfaces of the packet 1 of respective smaller side walls 13 of the outer container 2.

A horizontal lower edge of the central panel 23 is connected, by a line of weakness 39, to a panel 40, which is rectangular in shape and of equal length, the vertical side edges of which are connected, by respective lines of weakness 41, to respective rectangular flaps 42 the lateral dimensions of which, added to that of the panel 40, correspond to the lateral dimensions of the central panel 23 added to those of the side panels 18. A horizontal upper edge of each flap 42 is connected, through a line of weakness 43, to a further rectangular flap 44, extending upwards until running alongside the bottom edge of a respective side panel 18 above it.

The collar 16"" folded and ready to be placed next to an inner wrapper 3 containing a group 4 of cigarettes 5 and next to a portion of the inner surface of an outer container 2 is obtained by firstly folding squarely the panel 40 about the line of weakness 39 which separates it from the central panel 23, whilst maintaining the coplanarity between the panel 40 and the flaps 42 connected to it and the flaps 44 and arranging the panel 40 and flaps 42 on a first side relative to the panel 23; then folding squarely the flaps 42 towards the central panel 23 about the relative lines of weakness 41, maintaining the coplanarity between the flaps 42 and the flaps 44

adjacent to them; and lastly folding squarely the flaps 44 about the lines of weakness 43 which they delimit, causing the flaps 44 to adhere, and to glue using traces of glue not illustrated, to a second side of the panel 23 opposite the first side. The side panels 18 are folded by an angle of 90° about the lines of weakness 38 which join them to the central panel 23, in such a way that, in use, they are situated in contact with the inner surfaces of the smaller side walls 13 of the outer container 2.

In other words, the blank which defines the collar 16'''' from which the box-shaped body 16 is obtained comprises a central panel 23 and a bottom panel 40 connected along a first connecting edge 39, a first pair of side flaps 42 connected to the bottom panel 40 along a second connecting edge 41 and a second pair of side flaps 44, connected to the first pair of side flaps 42 along a third connecting edge 43, the first 39, second 41 and third 43 connecting edges being lines of weakness 39, 41, 43 about which the panels and the flaps 23, 40, 42, 44 connected can be reciprocally folded by 90°; the central panel 23 and the second pair of side flaps 44 being reciprocally released before assembly of the box-shaped body 16 and being reciprocally superposed and fixed by gluing to the assembly of the box-shaped body 16.

It should be noted that the central panel 23, the side panels 18, the rectangular panel 40, the flaps 42 and the flaps 44 of the collar 16'''' are located at, and constitute, respectively, the central wall 23, the side walls 18, a bottom wall 40, two side walls 42 and two elements 44 for fixing the box-shaped body 16.

Similarly to that described above, the assembled collar 16'''' (that is, the box-shaped body 16) has at least one set of four walls 23, 40, 42, 44 (two are present in the collar 16''''), and at least one vertex V in which three corners of the collar 16'''' converge, defined by three of the walls 23, 40, 42, which are positioned perpendicular to each other in pairs. The walls 23, 40, 42, 44 of each set of four walls are connected together in consecutive pairs along respective edges, except for a first wall 23 and a

last wall 44, and in each of these pairs two walls 23, 40; 40, 42; 42, 44; are reciprocally joined by a line of weakness 39; 41; 43 about which the two walls 23, 40; 40, 42; 42, 44; can be reciprocally folded squarely to form, as part of the set of four walls 23, 40, 42, 44, a trihedron with vertex V; the first wall 23 and the last wall 44 of the set of four, before assembly of the relative collar 16'''', are reciprocally released, and are reciprocally superposed and fixed by gluing during assembly.

Moreover, as part of each set of four walls, a first wall 23 and a second wall 40 are connected together and reciprocally joined by a first line of weakness 39, the first wall 23 and the second wall 40 following along a first direction; a third wall 42 is connected to the second wall 40 and is joined to it by a second line of weakness 41, the second wall 40 and the third wall 42 following along a second direction perpendicular to the first direction; and the third wall 42 is connected to the last wall 44 and is joined to it by a third line of weakness 43, the third wall 42 and the last wall 44 following along a third direction parallel to the first direction. In use, the folded and assembled collar 16'''' has the three above-mentioned directions, identified by the three corners coinciding with the three lines of weakness 39, 41, 43 and converging in the vertex V of the trihedron, mutually perpendicular to each other in pairs.

The collar 16V of Figure 12 comprises a central panel 23 that does not have at the top the above-mentioned recess 17’ of the collars 16', 16'' and 16''', which in use is positioned in contact with the inner surface of the packet 1 of the rear wall 12 of the outer container 2.

A horizontal lower edge of the central panel 23 is connected, by a line of weakness 39, to a panel 40, which is rectangular in shape and of equal length, the vertical side edges of which are connected, by respective lines of weakness 41, to respective rectangular flaps 42 the lateral dimensions of which are substantially equal to those of the smaller side walls 13 of the outer container 2. A horizontal upper edge of each flap 42 is connected, through a line of weakness 43, to a further rectangular flap 44, extending

upwards and having a width equal to that of the flap 42 adjacent to it.

A horizontal upper edge of the central panel 23 is connected, through a line of weakness 14, to a rectangular panel 15, extending upwards and having a width equal to that of the central panel 23 adjacent to it.

The collar 16V folded and ready to be placed next to an inner wrapper 3 containing a group 4 of cigarettes 5 and next to a portion of the inner surface of an outer container 2 is obtained by firstly folding squarely the panel 40 about the line of weakness 39 which separates it from the central panel 23, whilst maintaining the coplanarity between the panel 40 and the flaps 42 connected to it and the flaps 44 and arranging the panel 40 and flaps 42 on a first side relative to the central panel 23; then folding squarely the flaps 42 towards the central panel 23 about the relative lines of weakness 41, maintaining the coplanarity between the flaps 42 and the flaps 44 adjacent to them; and lastly folding squarely the flaps 44 about the lines of weakness 43 which they delimit, causing the flaps 44 to adhere, and to glue using traces of glue not illustrated, to a second side of the panel 23 opposite the first side.

The rectangular panel 15 is folded at an angle of 180° about the line of weakness 14, and preferably from the second side of the central panel 23, in line with the flaps 44 for reasons of symmetry, and is located in contact with the upper surface of the central panel 23 designed to be positioned in contact with the inner surface of the packet 1 of the rear wall 12 of the outer container 2. The purpose of such an arrangement of the panel 15 is to keep consistent at the top and bottom the thicknesses of the rear portion of the inner box-shaped body obtained by folding and assembling flaps and panels of the collar 16V.

The collar of Figure 13, denoted in its entirety by the numeral 16VI, differs from the collar 16''' of Figure 9 (with which it has in common, where possible, the reference numerals) in that it does not have the further flaps 36 connected at the top to the flaps 34, and the side panels 18 extend towards the bottom until they are alongside the upper edges of the flaps

34.

The collar 16VI folded and ready to be placed next to an inner wrapper 3 containing a group 4 of cigarettes 5 and next to a portion of the inner surface of an outer container 2 is obtained by firstly folding squarely the panel 32 about the line of weakness 31 which separates it from the front panel 17, whilst maintaining the coplanarity between the panel 32 and the flaps 34 connected to it; then folding the side panels 18 by an angle of 90° about the lines of weakness 18' which join them to the panel 17, in such a way that, in use, they are in contact with the corresponding inner surfaces of the smaller side walls 13 of the outer container 2; and then folding squarely the flaps 34 upwards about the relative lines of weakness 33, so that they adhere, and glue using traces of glue not shown, to the above-mentioned surfaces of the panels 18 and in contact, in use, with the inner surfaces of the smaller side walls 13 of the outer container 2. In this embodiment of the box-shaped body, the flaps 34 are glued to the outer surface (that is to say, on the opposite side relative to the position of the inner wrapper 3) of the side panels 18 of the collar 16VI. Alternatively, it is possible to firstly fold squarely the panel 32 about the line of weakness 31, then fold squarely the flaps 34 upwards about the respective lines of weakness 33; and then fold the side panels 18 by an angle of 90° about the lines of weakness 18'. In this alternative embodiment, the flaps 34 are glued to the inner surface (that is to say, on the same side relative to the inner wrapper 3) of the side panels 18 of the collar 16VI.

The collar of Figure 14, denoted in its entirety by the numeral 16VII, differs from the collar 16' of Figure 5 (with which it has in common, where possible, the reference numerals) in that it does not have the further flaps 36 connected at the top to the flaps 34, and the side panels 18 extend towards the bottom until they are alongside the upper edges of the flaps 34.

The collar 16VII folded and ready to be placed next to an inner wrapper 3 containing a group 4 of cigarettes 5 and next to a portion of the inner

surface of an outer container 2 is obtained by firstly folding squarely the panel 32 about the line of weakness 31 which separates it from the front panel 17, whilst maintaining the coplanarity between the panel 32 and the flaps 34 connected to it; then folding the side panels 18 by an angle of 90° about the lines of weakness 18' which join them to the panel 17, in such a way that, in use, they are in contact with the corresponding inner surfaces of the smaller side walls 13 of the outer container 2; and then folding squarely the flaps 34 upwards about the relative lines of weakness 33, so that they adhere, and glue using traces of glue not shown, to the above-mentioned surfaces of the panels 18 and in contact, in use, with the inner surfaces of the smaller side walls 13 of the outer container 2. An alternative embodiment is also possible for the collar 16VII similar to that described above for the collar 16VI.

The collar of Figures 15 and 16, denoted in its entirety by the numeral 16VIII, differs from the collar 16' of Figure 5 (with which it has in common, where possible, the reference numerals) in that it does not have the flaps 34 and 36 relative to a side (the left side in Figures 15 and 16), a half of the panel 32 relative to that side is missing, and the panel 17 does not have a relative lower portion, substantially square in shape, relative to that side.

The assembled collar 16VIII (that is, the relative box-shaped body 16) has a single vertex V (positioned below and to the right in Figure 16) in which the three corners of the collar 16VIII converge, defined by the panels 17 and 32 and by two flaps 34 and 36.

The collar of Figures 17 and 18, denoted in its entirety by the numeral 16IX, differs from the collar 16' of Figure 5 (with which it has in common, where possible, the reference numerals) in that it does not have the notches which define the flaps 34 and 36 relative to a side (the left side in Figures 17 and 18), a therefore a panel 18, without those flaps 34 and 36 and positioned to the left in Figures 17 and 18, extends along the entire height of the flap 16IX. The panel 32 has a width which is equal to half of

that of the panel 32 of the collar 16' of Figure 5, and covers only the half of the collar 16IX furthest from the panel 18 without the flaps 34 and 36, being separated from a portion of the panel 17 positioned alongside it by a further notch 32 '.

The assembled collar 16 IX (that is, the relative box-shaped body 16), like the above-mentioned collar 16VIII, also has a single vertex V (positioned below and to the right in Figure 16) in which the three corners of the collar 16 IX converge, defined by the panels 17 and 32 and by two flaps 34 and 36. A significant difference between the box-shaped bodies 16 obtained using, respectively, the collars 16IX and 16VIII consists in that in them the lower edges of the portions of the panels 17 and 18 not affected by the above-mentioned vertex V are positioned at respective different levels, respectively lower and higher than that of the above-mentioned flaps 34 and 36.

The collar of Figures 19 and 20, denoted in its entirety by the numeral 16X, differs from the collar 16' of Figure 5 (with which it has in common, where possible, the reference numerals) in that a lower transversally middle portion of the panel 17 has a vertical notch 32, which delimits from the left side in Figure 19 a panel 32 which has a width equal to half that of the panel 32 of the collar 16' of the Figure 5 and has only half of the collar 16X positioned on the left in Figure 19. To the right of the line of weakness 32'' there is a lower portion of the panel 17, labelled 32'"and having dimensions similar to those of the panel 32 of the collar 16X, which has position and dimensions similar to those of the portion of the panel 17, which, in the collar 16VIII of Figure 15, supports the panel 32 and the flaps 34 and 36, and is integral in an identical fashion to a panel 32 and to flaps 34 and 36 which are equal to those of the collar 16VIII.

The assembled collar 16X (that is, the relative box-shaped body 16) has at the bottom two vertices V, positioned, respectively, to the left and to the right in Figure 20 and situated in the box-shaped body 16 at respective higher and lower levels. The vertices V are positioned at respective zones

at which three corners of the collar 16X converge, formed, respectively, to the left and to the right in the box-shaped body 16 of Figure 20, by panels 17 and 32 (or 17 and 32''') and by two flaps 34 and 36.

The collar of Figures 21 and 22, denoted in its entirety by the numeral 16XI, differs from the collar 16' of Figures 19 and 20 (with which it has in common, where possible, the reference numerals) in that the central recess 17' present in the upper portion of the panel 17 has a further recess 17'' which extends towards the bottom in the box-shaped body 16 obtained by the collar 16XI, preferably slightly shifted laterally relative to the centre line of the panel 17. The purpose of the recess 17'' is to facilitate the taking out of cigarettes 5 from the packet 1 by the smoker. Preferably, in the collar 16XI, as shown in Figures 21 and 22, the panel 18 positioned closest to the recess 17" is shorter at the top than the one further from the recess 17''.

In a variant embodiment not illustrated, the box-shaped body 16, made according to any one of the embodiments described above may be located inside the inner wrapper 3. In that case, preferably, the box-shaped body 16 is fixed to the inner surface of the inner wrapper 3.

With reference to the box-shaped body 16 described with reference to Figures 5 and 6, but extending the same considerations to the variant embodiments illustrated in Figures 7-22, it is evident that if the box-shaped body 16 must have a reduced depth, that is to say, a dimension of the panel 32 reduced in the direction perpendicular to the line 31 (or, equivalently, a dimension of the panels 18 reduced in the direction perpendicular to the lines 18'), the rectangular area of the flaps 36 is advantageously extended for the purpose of their gluing on the panel 17 thanks to the fact that the flaps 36 can extend in a sufficiently large fashion along the longitudinal direction of the panels 18, at the expense of the height of the panels 18.

The need to have a box-shaped body 16 with a reduced depth can derive, for example, from the fact that the packet 1 has reduced depth, that is to

say, a reduced size of the walls 13 (or sides 13) measured transversely to the front wall 11 and to the rear wall 12 of the packet 1. This is, for example, the case of packets 1 with one or two layers of cigarettes 5 instead of the more common three layers and/or the case in which the cigarettes 5 are of the type with reduced diameter (compared with the more common diameter substantially equal to 8 mm), for example the so-called “slim” or “superslim” cigarettes.

For this reason, the proposed invention is particularly advantageous if cigarettes 5 (or other smoker's articles) of reduced length are to be housed in packets 1 with reduced depth.

CLAIMS

1. A packet for smoker's articles, in particular cigarettes, comprising at least one an outer container (2), and at least one inner wrapper (3) contained in the outer container (2) and housing a group (4) of smoker's articles (5), at least one box-shaped body (16) which can be associated with the outer container (2) or the inner wrapper (3) and obtained from a blank made from sheet material, in particular paper; the box-shaped body (16) being positioned inside an outer container (2) and at least partly alongside the peripheral surface of an inner wrapper (3) enclosing a group (4) of smoker's articles (5);

characterised in that the blank from which the box-shaped body (16) is obtained comprises a front panel (17) and a bottom panel (32) connected along a first connecting edge (31), at least one first side flap (34) connected to the bottom panel (32) along a second connecting edge (33) and a second side flap (36), connected to the first side flap (34) along a third connecting edge (35), the first (31), second (33) and third (35) connecting edges being lines (31, 33, 35) of weakness about which the panels and the flaps (17, 32, 34, 36) connected can be reciprocally folded by 90°; the front panel (17) and the second side flap (36) being reciprocally released before assembly of the box-shaped body (16) and being reciprocally superposed and fixed by gluing to the assembly of the box-shaped body (16).

2. A packet according to claim 1, characterised in that each box-shaped body (16) has at least one vertex (V) defined by three walls (17, 32, 34; 23, 40, 42) perpendicular to each other in pairs; the three walls (17, 32, 34; 23, 40, 42) forming part of a set of four walls (17, 32, 34, 36; 23, 40, 42, 44) connected together in consecutive pairs along respective edges, except for a first (17; 23) and a last (36; 44) wall, and in each of these pairs two walls (17, 32; 32, 34; 34, 36; 23, 40; 40, 42; 42, 44) being reciprocally joined by a line (31, 33, 35; 39, 41, 43) of weakness about

which the two walls (17, 32; 32, 34; 34, 36; 23, 40; 40, 42; 42, 44) can be reciprocally folded squarely; the first (17; 23) and the last (36; 44) wall of each set of four, before assembly of the relative box-shaped body (16), being reciprocally released, and being reciprocally superposed and fixed by gluing during assembly.

3. The packet according to claim 2, wherein, as part of the set of four walls of the box-shaped body (16) assembled, a first (17; 23) and a second wall (32; 40) are connected together and reciprocally joined by a first line (31; 39) of weakness, the first (17; 23) and the second wall (32; 40) following along a first direction; a third wall (34; 42) is connected to the second wall (32; 40) and is joined to it by a second line (33; 41) of weakness, the second (32; 40) and the third (34; 42) wall following along a second direction perpendicular to the first direction; and the third wall (34; 42) is connected to the last wall (36; 44) and is joined to it by a third line (35; 43) of weakness, the third (34; 42) and the last wall (36; 44) following along a third direction; the first, second and third directions being perpendicular to each other in pairs.

4. The packet according to any one of claims 1 to 3, wherein the box-shaped body (16) forms a collar (16', 16'', 16''', 16'''', 16^{V}, 16^{VI}, 16^{VII}, 16^{VIII}, 16^{IX}, 16^{X}, 16^{XI}).

5. The packet according to claim 4, wherein the box-shaped body (16) forms a collar (16', 16'', 16''', 16^{VI}, 16^{VII}) positioned inside an outer container (2) and at least partly alongside the front peripheral surface of an inner wrapper (3) enclosing a group (4) of smoker's articles (5).

6. The packet according to claim 4, wherein the at least one box-shaped body (16) forms a collar (16'''', 16^{V}) positioned inside an outer container (2) and at least partly alongside the rear peripheral surface of an inner wrapper (3) enclosing a group (4) of smoker's articles (5).

7. The packet according to any one of claims 1 to 6 wherein the outer container (2) has a bottom wall (10) forming the base of the outer container (2), characterised in that the box-shaped body (16) is positioned

inside a portion of the relative outer container (2) spaced by a stretch of predetermined length from the base of the outer container (2), the box-shaped body (16) being fixed by gluing to the outer container (2).

8. The packet according to any one of claims 1 to 7 wherein a first pair of side flaps (34) is connected to the bottom panel (32) along the second connecting edge (33) and a second pair of side flaps (36) is connected to the first pair of side flaps (34) along the third connecting edge (35); the front panel (17) and the second pair of side flaps (36) being reciprocally released before assembly of the box-shaped body (16) and being reciprocally superposed and fixed by gluing to the assembly of the box-shaped body (16).

9. The packet according to any one of claims 1 to 8, wherein each box-shaped body (16) has two vertices (V) located at its bottom zone.

10. The packet according to any one of claims 1 to 9, wherein the at least one box-shaped body (16) is able to house inside rod-shaped filters and/or matches.

11. The packet according to any one of claims 1 to 9, wherein it houses one or two layers of smoker's articles and/or smoker's articles with reduced diameters, in particular "*slim*" or "*superslim*" cigarettes.

FIG.1

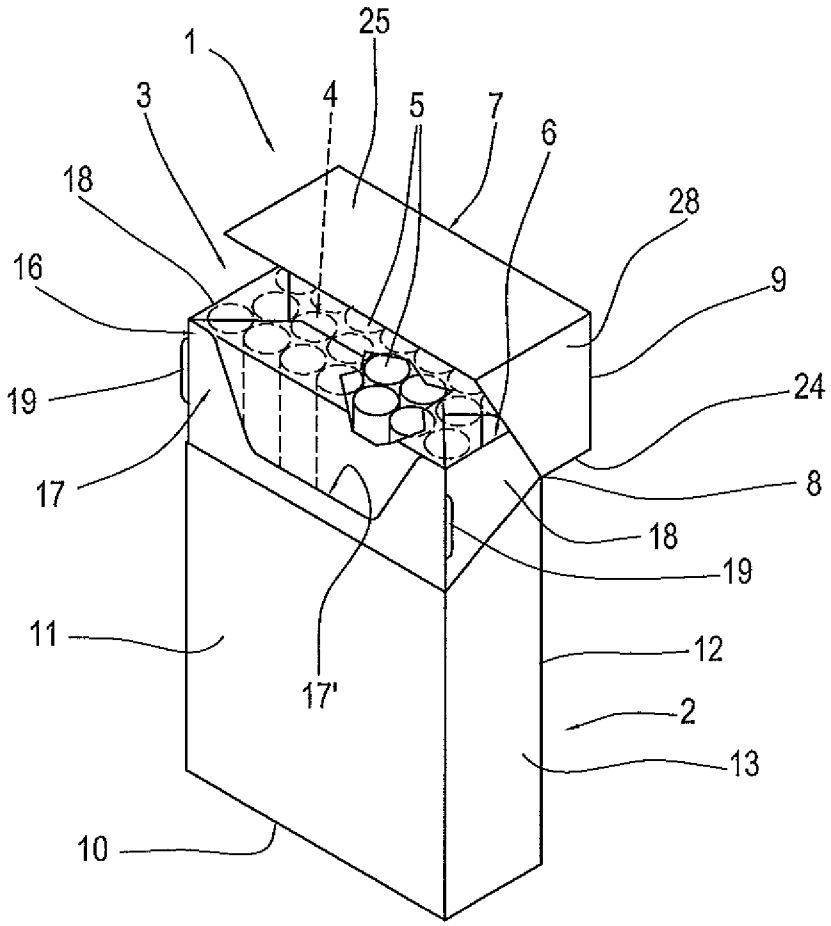

FIG.2

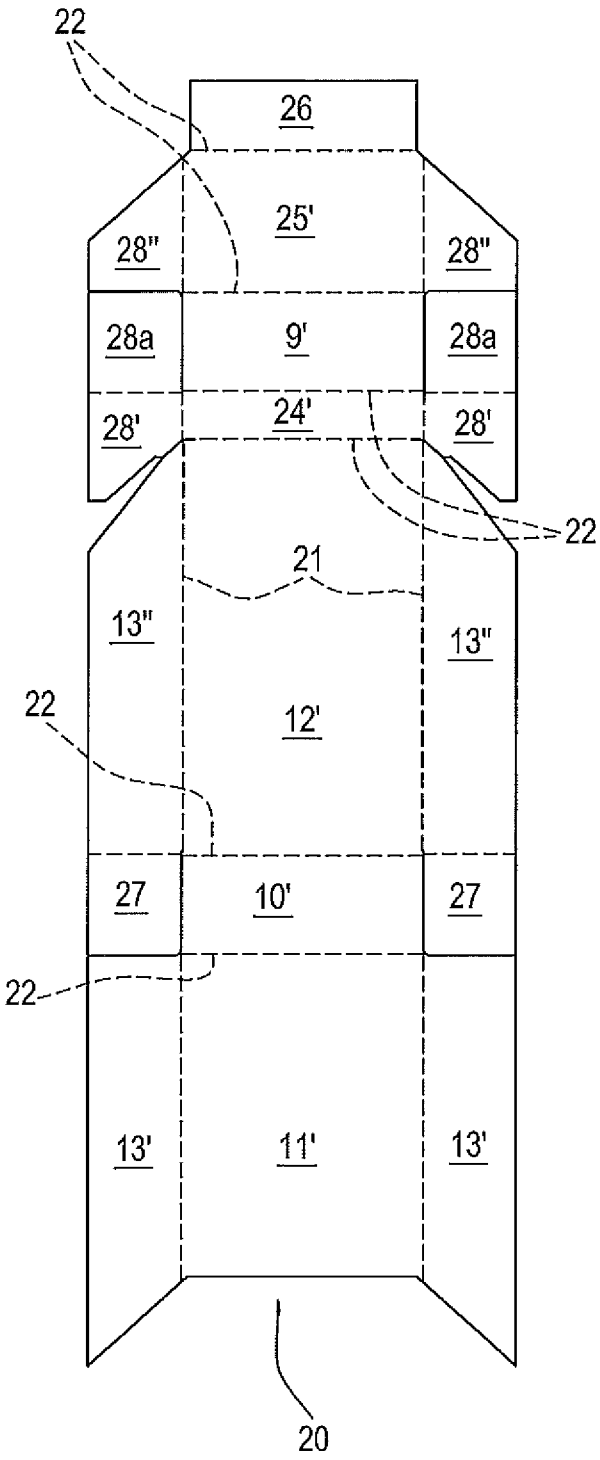
22
26
25'
28"
28"
28a
9'
28a
28'
24'
28'
22
21
13"
13"
22
12'
27
10'
27
22
13'
11'
13'
20

FIG.3

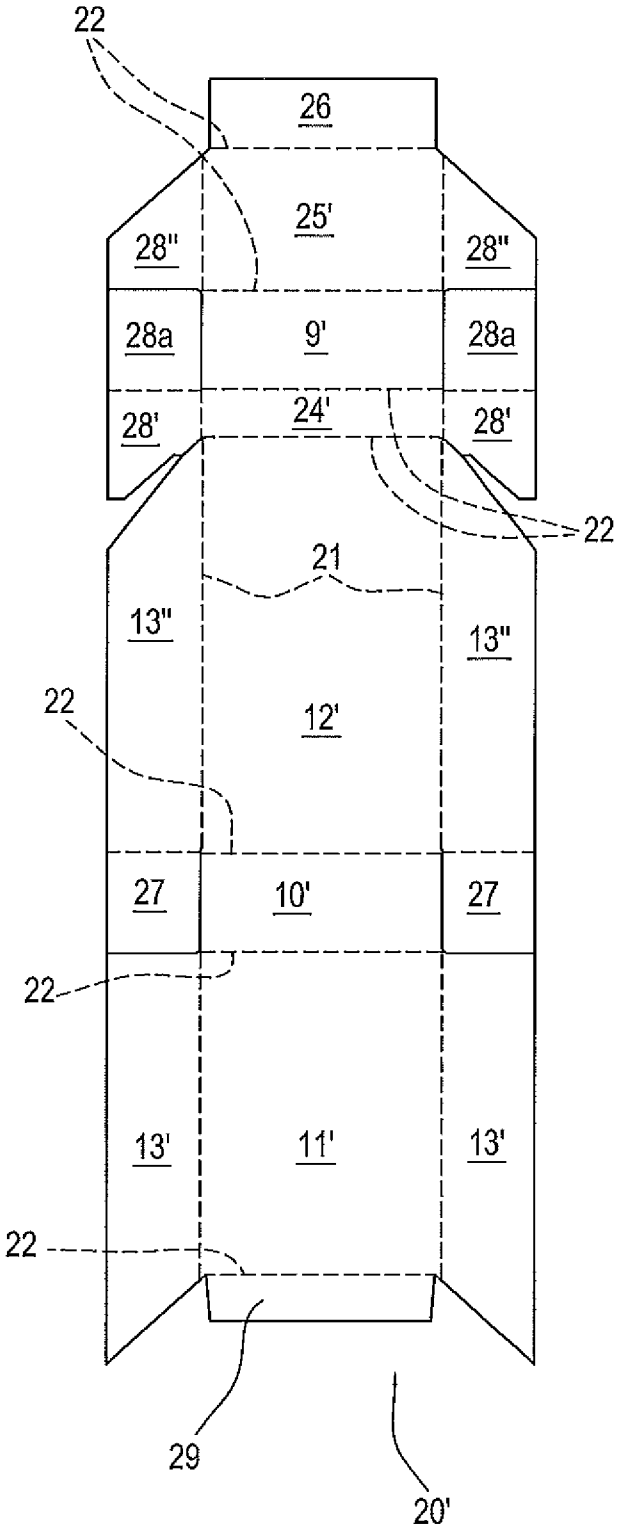
22
26
25'
28"
28"
28a
9'
28a
28'
24'
28'
22
21
13"
13"
22
12'
27
10'
27
22
13'
11'
13'
22
29
20'

FIG.4

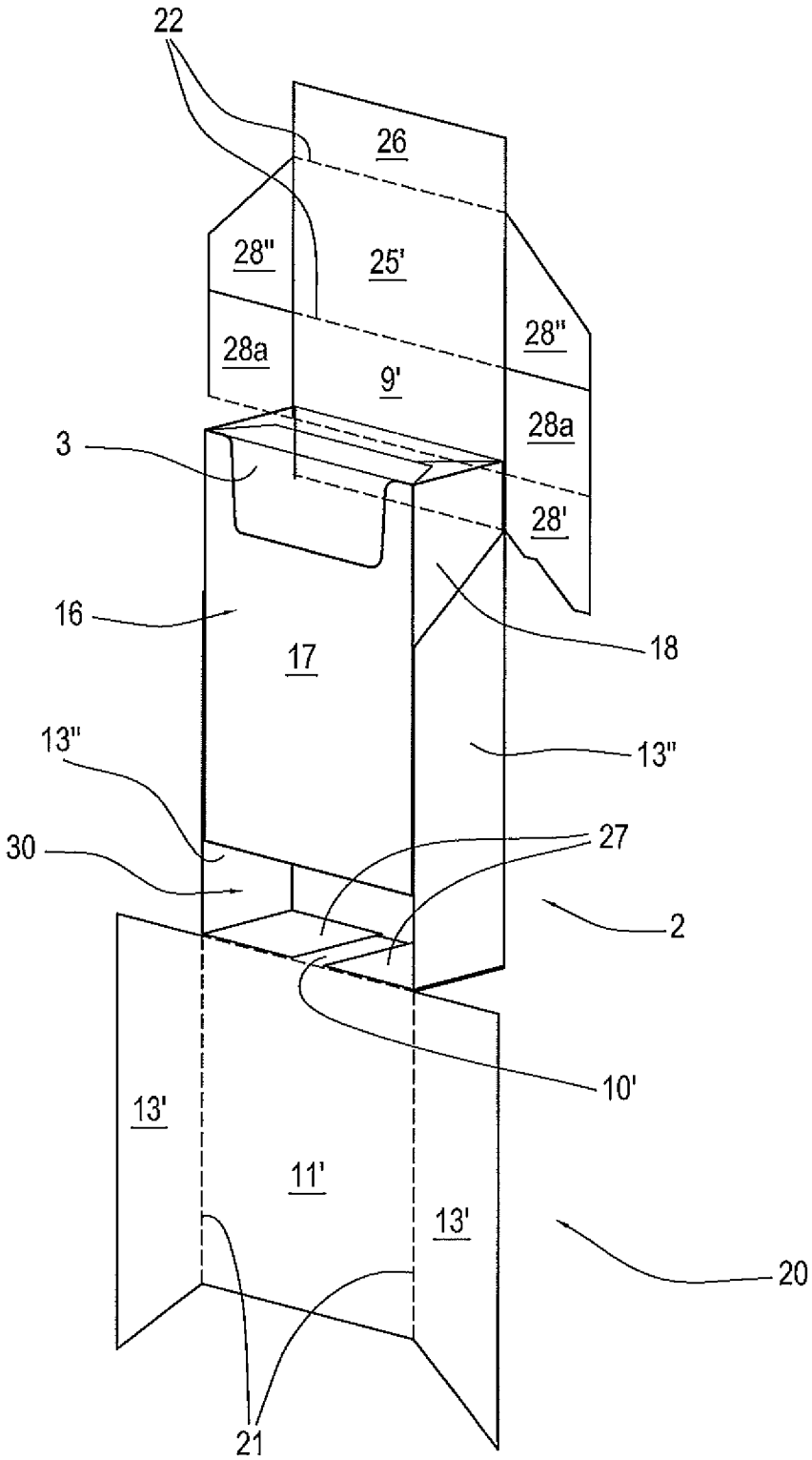

FIG.5

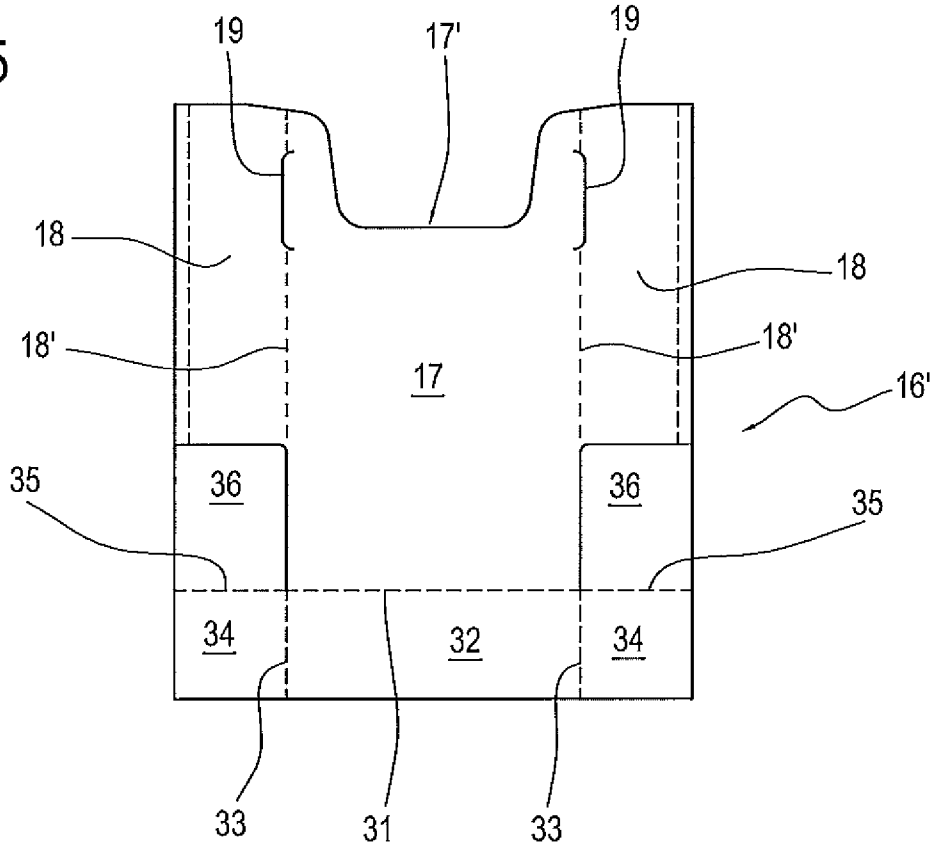
19
17'
19
18
18
18'
18'
17
16'
35
36
36
35
34
32
34
33
31
33

FIG.6

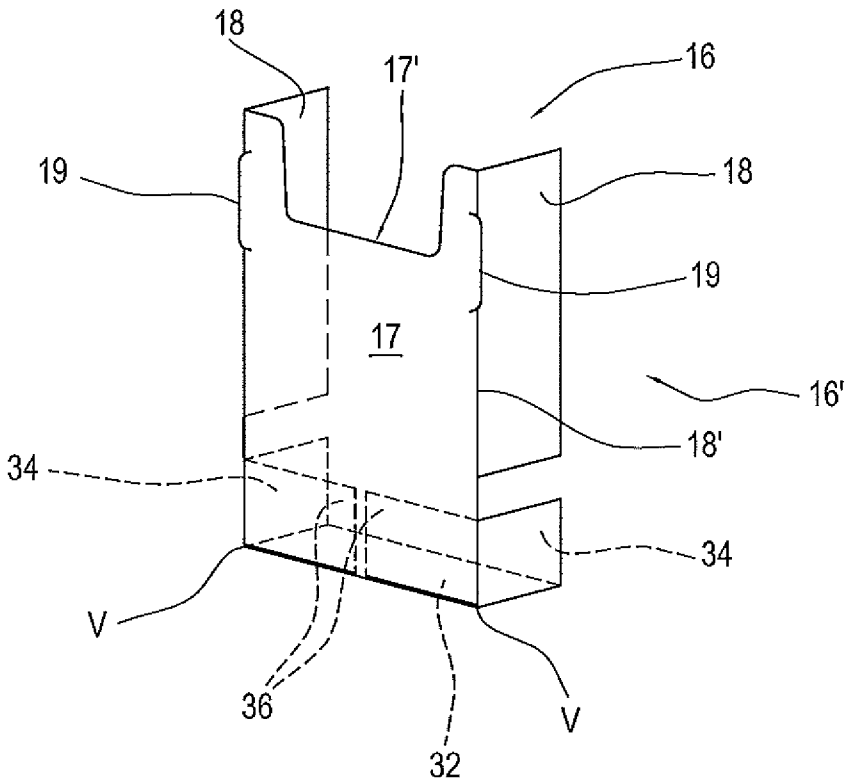
18
17'
16
19
18
19
17
16'
18'
34
34
V
36
32
V

FIG.7

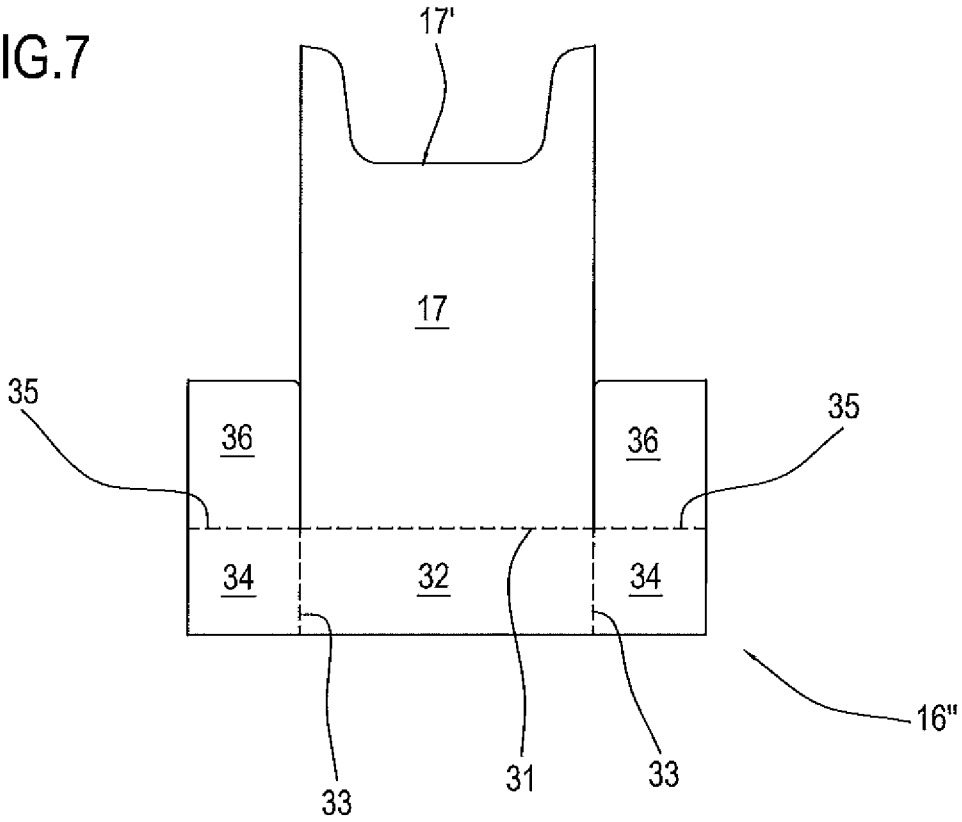

FIG.8

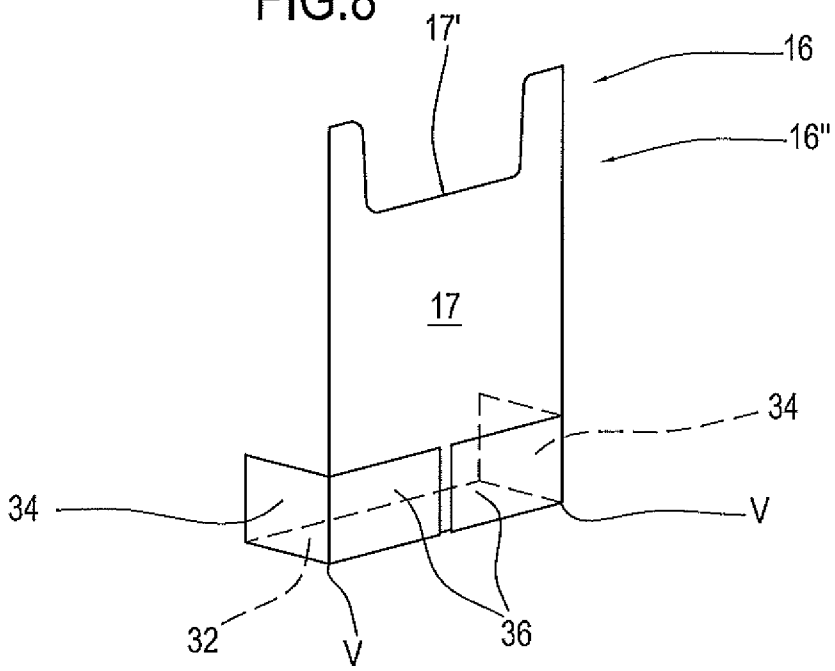

FIG.9

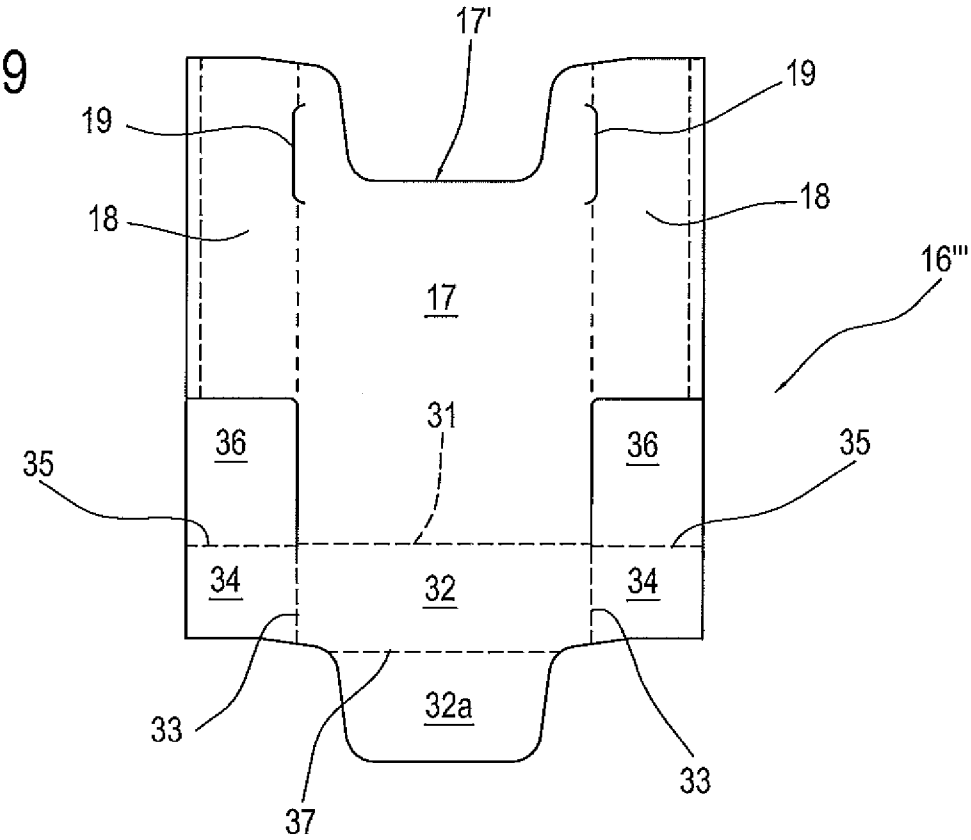
17'
19
19
18
18
16'''
17
31
36
36
35
35
34
32
34
33
32a
33
37

FIG.10

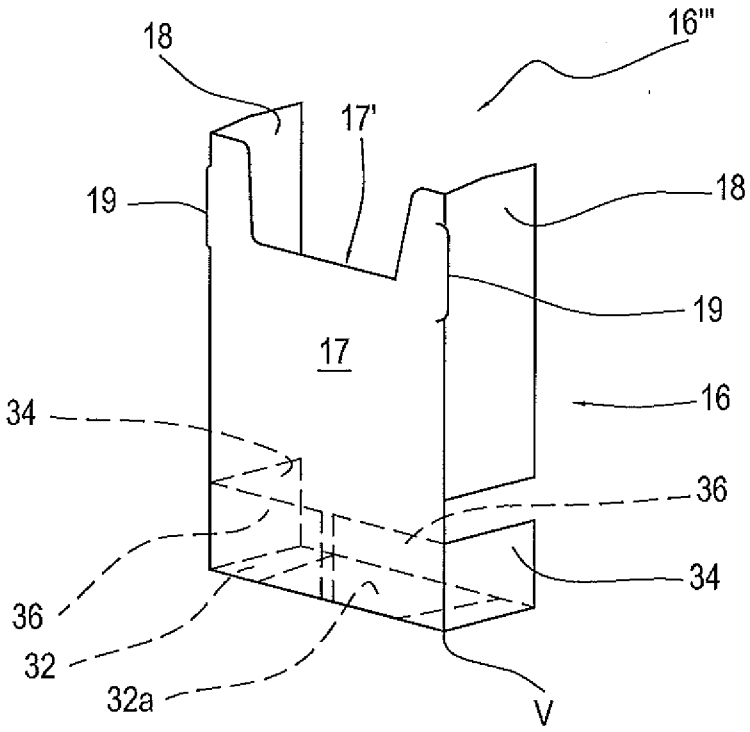
18
16'''
17'
19
18
19
17
16
34
36
36
34
32
32a
V

FIG.11

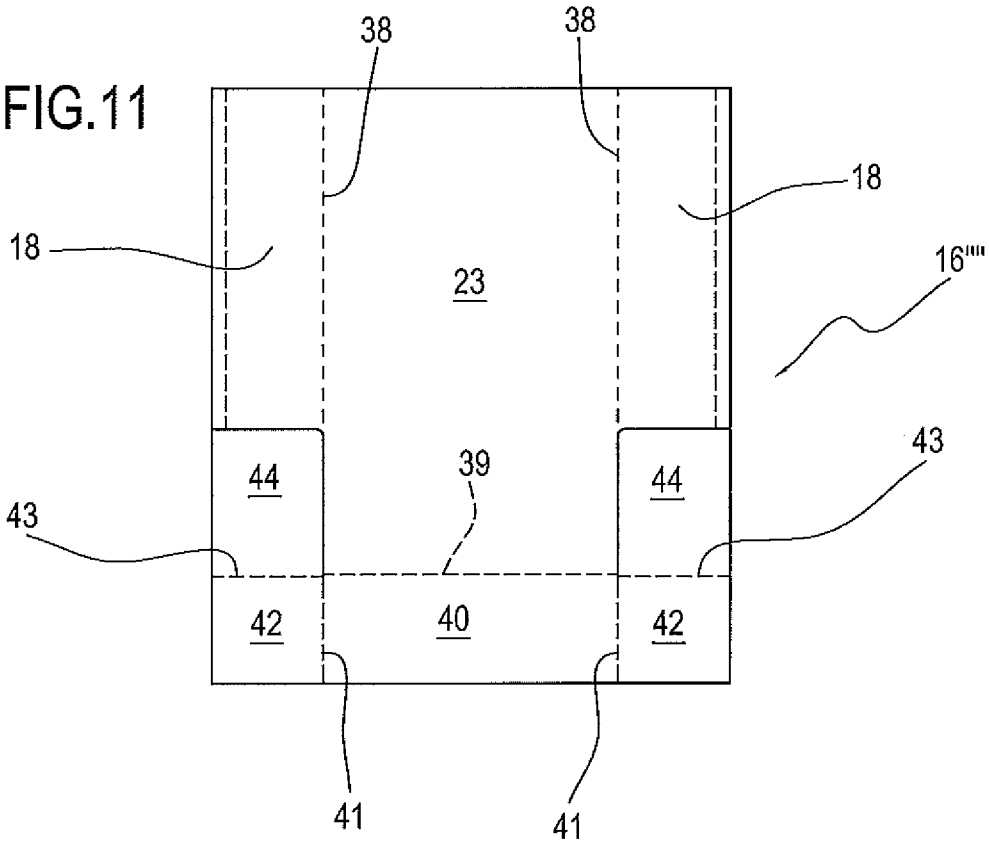
38
38
18
18
16''''
23
43
44
39
44
43
42
40
42
41
41

FIG.12

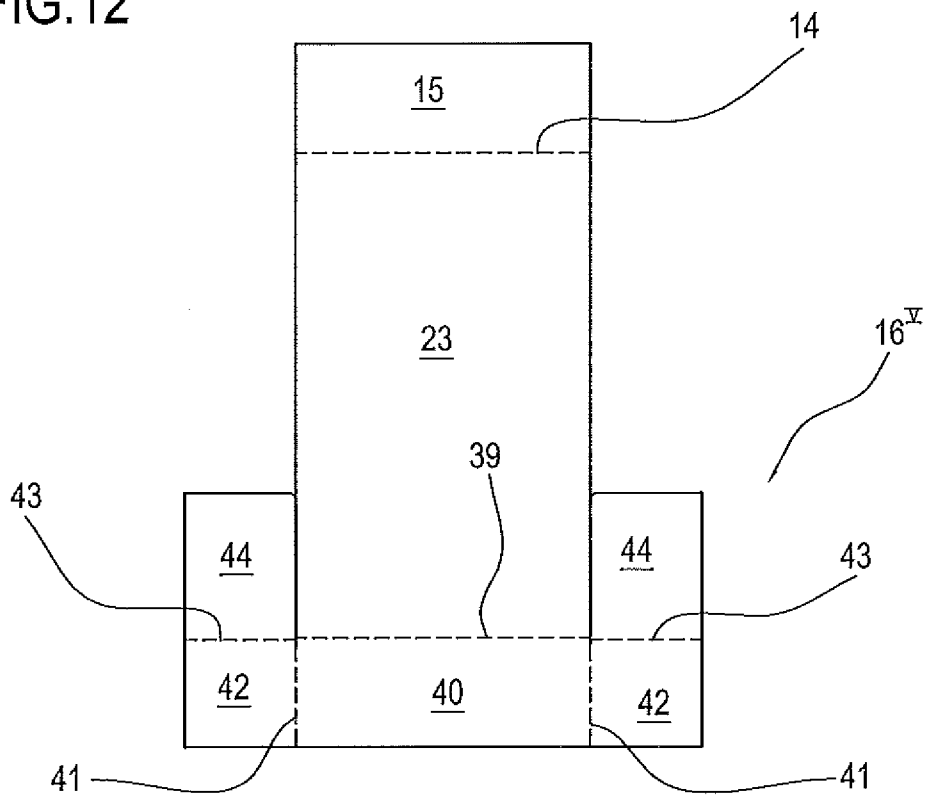
14
15
23
16V
39
43
44
44
43
42
40
42
41
41

FIG.13

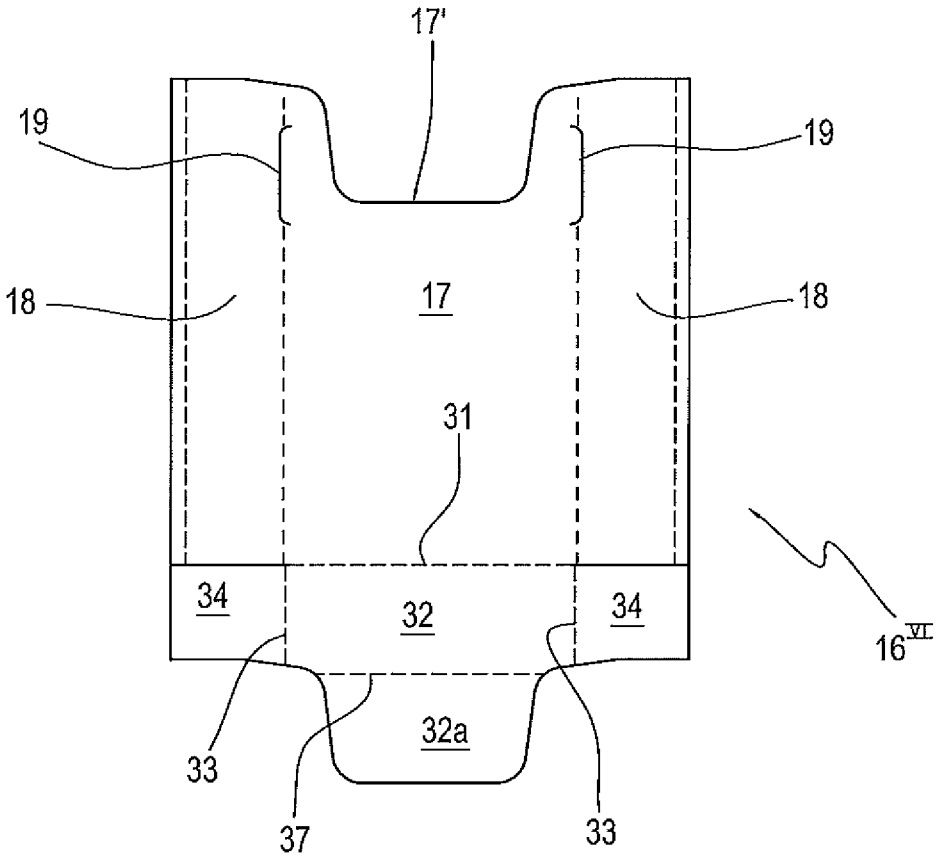
17'
19
19
18
17
18
31
34
32
34
16VI
32a
33
37
33

FIG.14

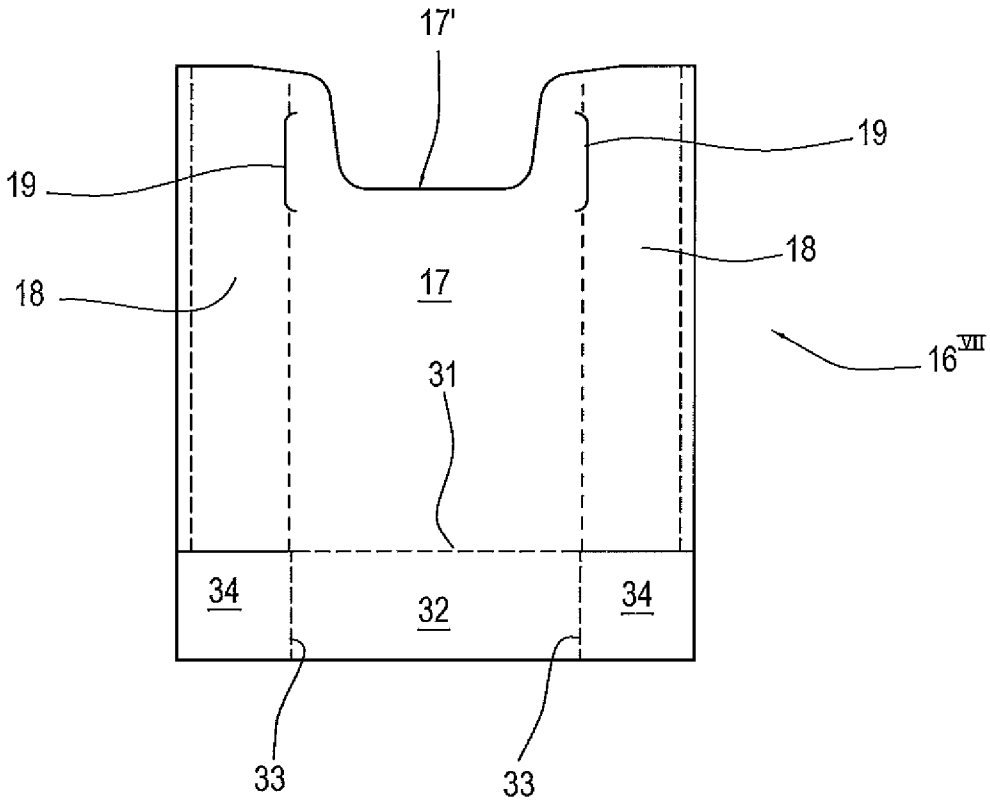
17'
19
19
18
18
17
16VII
31
34
32
34
33
33

FIG.15

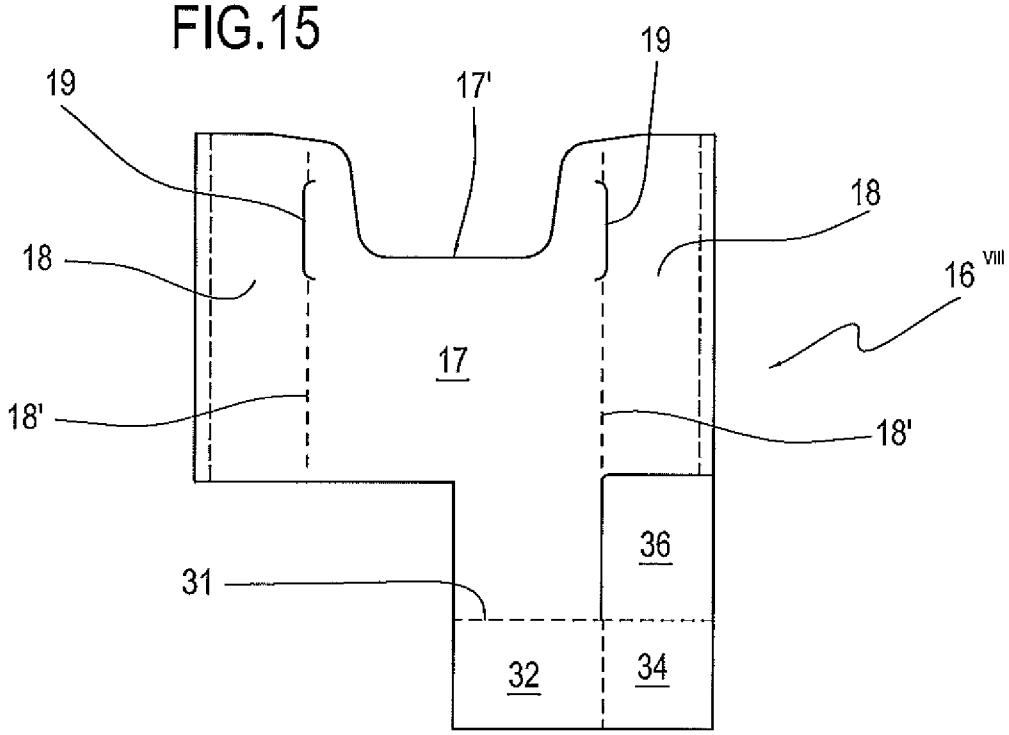
19
17'
19
18
18
16 VIII
17
18'
18'
36
31
32
34

FIG.16

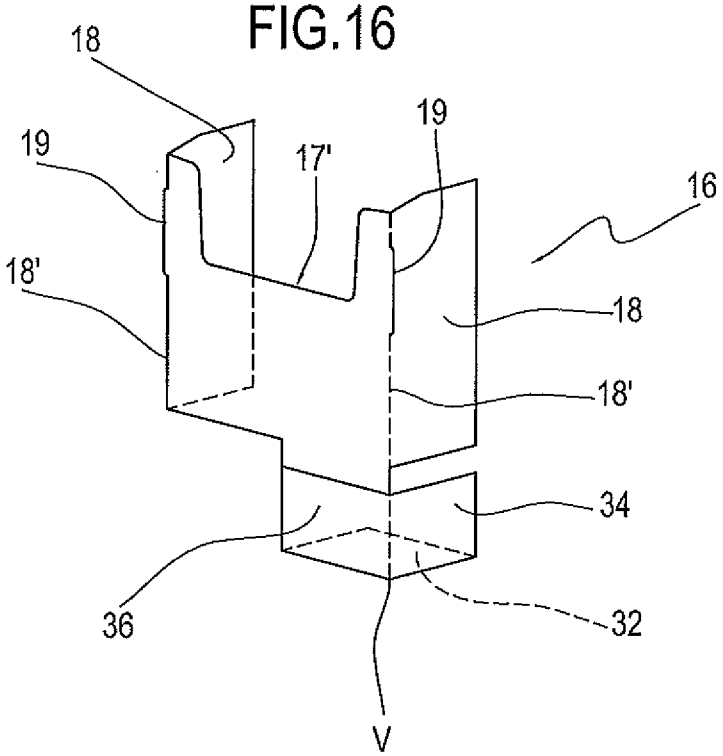
18
19
19
17'
16
18'
18
18'
34
36
32
V

FIG.17

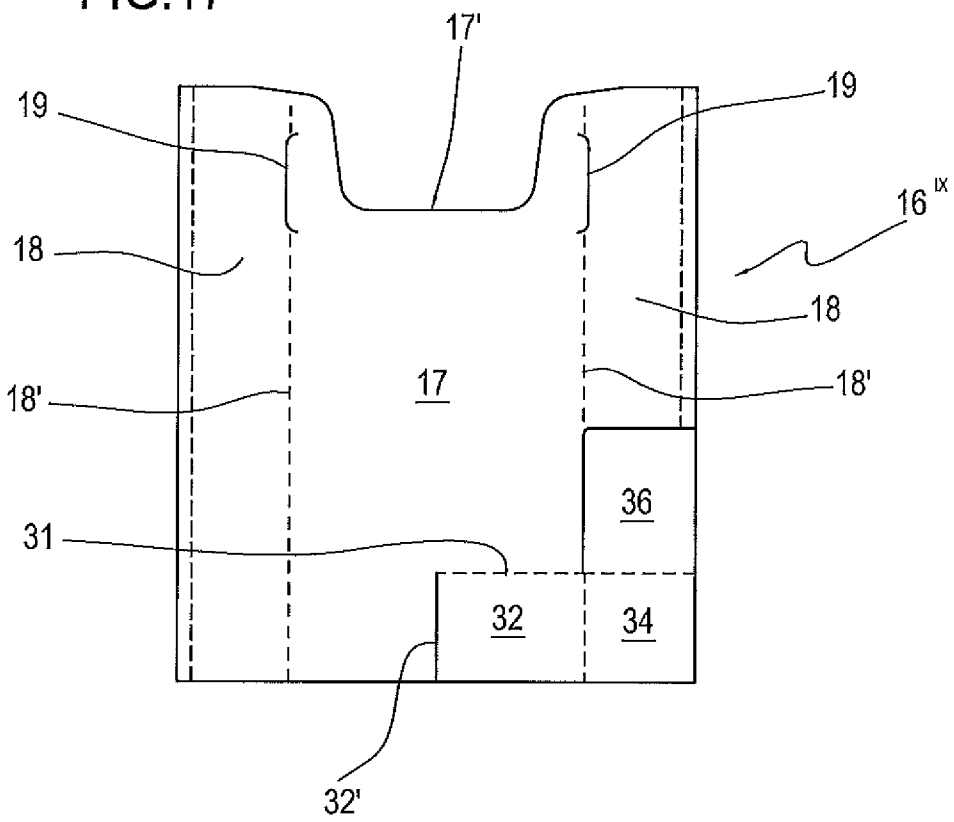
17'
19
19
16 IX
18
18
18'
17
18'
36
31
32
34
32'

FIG.18

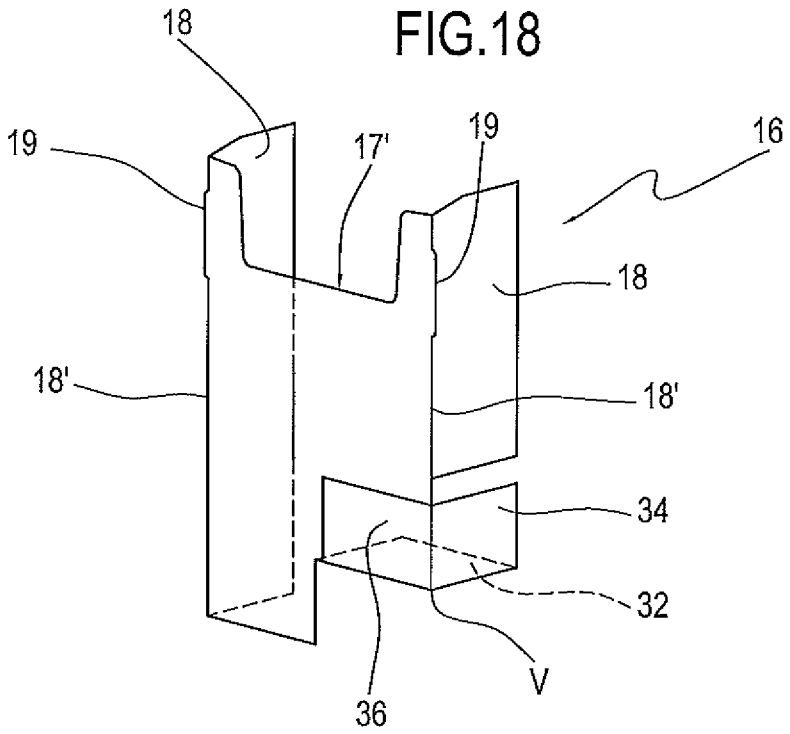
18
19
17'
19
16
18
18'
18'
34
32
V
36

FIG.19

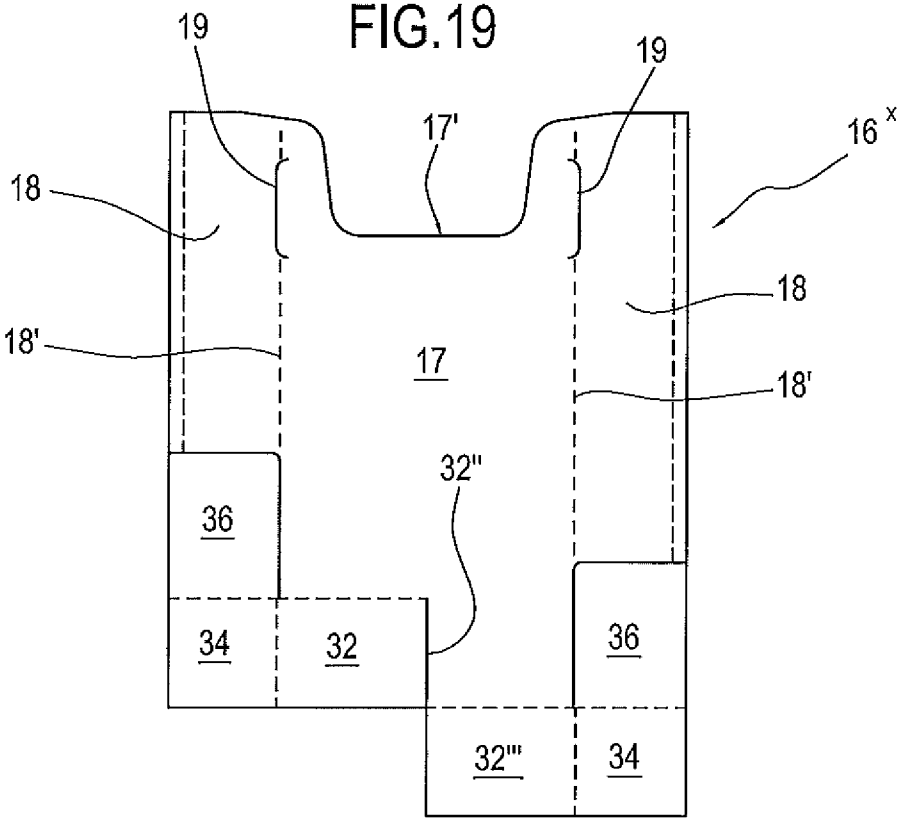
19
19
17'
16 x
18
18
18'
17
18'
32''
36
34
32
36
32'''
34

FIG.20

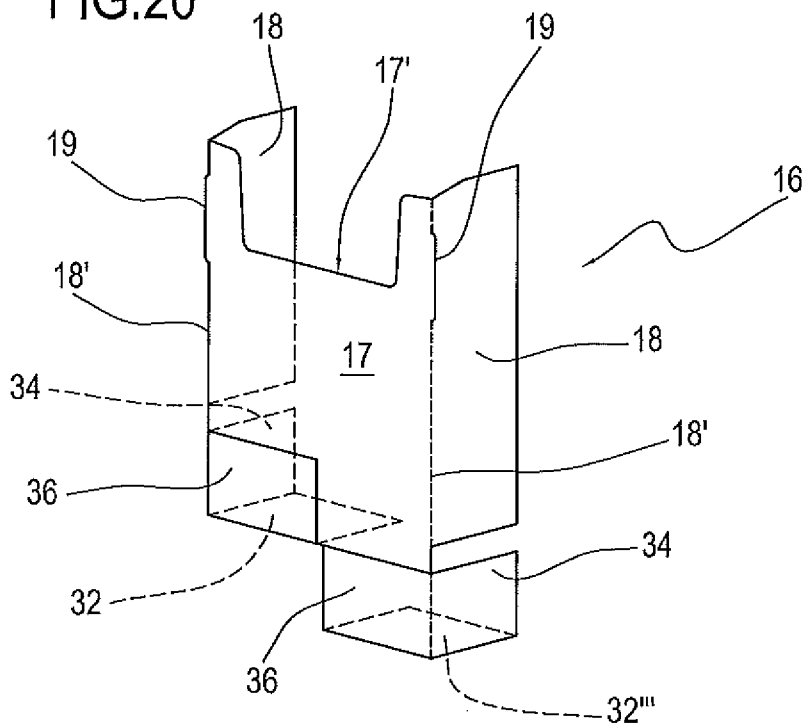
18
19
17'
19
16
18'
18
17
34
18'
36
34
32
36
32'''

FIG.21

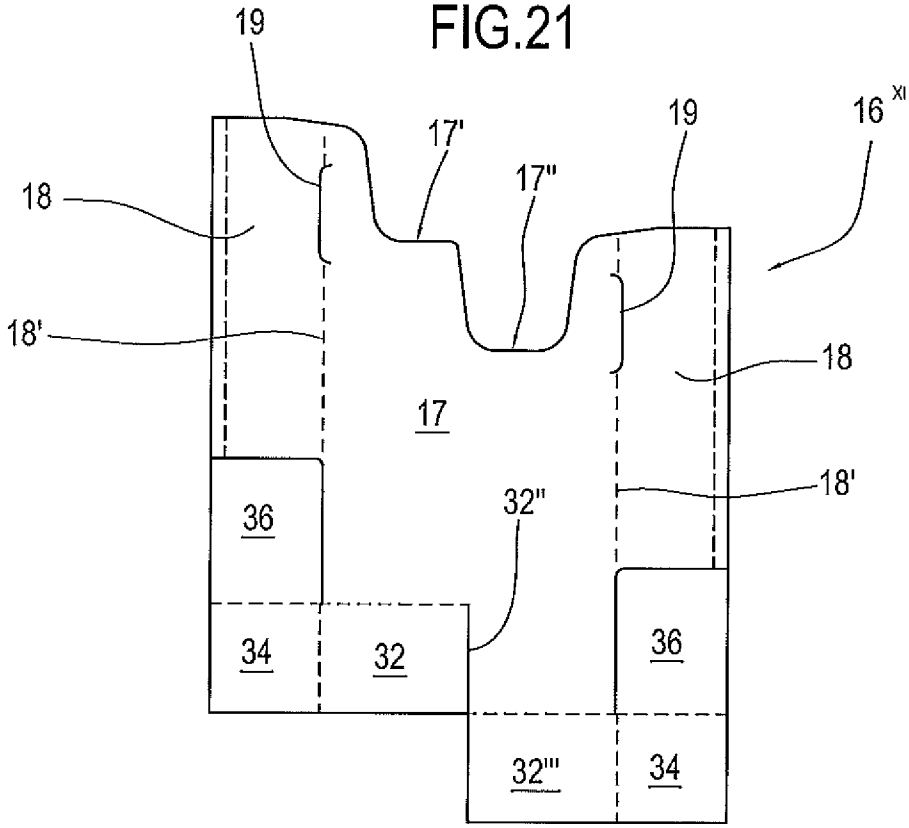
19
17'
17"
19
16
XI
18
18'
18
17
18'
36
32"
34
32
36
32'''
34

FIG.22

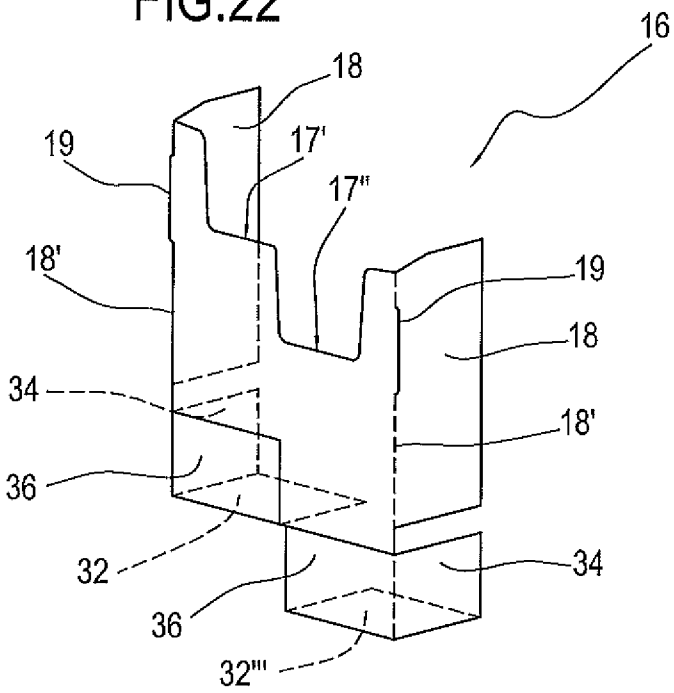
16
18
19
17'
17"
18'
19
18
34
18'
36
32
34
36
32'''

INTERNATIONAL SEARCH REPORT

International application No
PCT/IB2014/063480

A. CLASSIFICATION OF SUBJECT MATTER
INV. B65D85/10
ADD.

According to International Patent Classification (IPC) or to both national classification and IPC

B. FIELDS SEARCHED

Minimum documentation searched (classification system followed by classification symbols)
B65D

Documentation searched other than minimum documentation to the extent that such documents are included in the fields searched

Electronic data base consulted during the international search (name of data base and, where practicable, search terms used)
EPO-Internal

C. DOCUMENTS CONSIDERED TO BE RELEVANT

Category*	Citation of document, with indication, where appropriate, of the relevant passages	Relevant to claim No.
X	US 4 989 728 A (NEYRET STEPHANE [FR] ET AL) 5 February 1991 (1991-02-05) cited in the application column 2, line 60 - column 4, line 16 figures 1-7	1-11
X	DE 10 2011 119344 A1 (FOCKE & CO [DE]) 11 April 2013 (2013-04-11) page 6, paragraph 52 figures 1, 2, 16, 17	1-6,8-11
X	DE 85 24 779 U1 (RINKE RUDI [DE]) 17 October 1985 (1985-10-17) the whole document	1-3,8-11

-/--

[X] Further documents are listed in the continuation of Box C.

[X] See patent family annex.

* Special categories of cited documents :

"A" document defining the general state of the art which is not considered to be of particular relevance

"E" earlier application or patent but published on or after the international filing date

"L" document which may throw doubts on priority claim(s) or which is cited to establish the publication date of another citation or other special reason (as specified)

"O" document referring to an oral disclosure, use, exhibition or other means

"P" document published prior to the international filing date but later than the priority date claimed

"T" later document published after the international filing date or priority date and not in conflict with the application but cited to understand the principle or theory underlying the invention

"X" document of particular relevance; the claimed invention cannot be considered novel or cannot be considered to involve an inventive step when the document is taken alone

"Y" document of particular relevance; the claimed invention cannot be considered to involve an inventive step when the document is combined with one or more other such documents, such combination being obvious to a person skilled in the art

"&" document member of the same patent family

Date of the actual completion of the international search	Date of mailing of the international search report
5 November 2014	13/11/2014

Name and mailing address of the ISA/	Authorized officer
European Patent Office, P.B. 5818 Patentlaan 2 NL - 2280 HV Rijswijk Tel. (+31-70) 340-2040, Fax: (+31-70) 340-3016	Piolat, Olivier

2

Form PCT/ISA/210 (second sheet) (April 2005)

C(Continuation). DOCUMENTS CONSIDERED TO BE RELEVANT

Category*	Citation of document, with indication, where appropriate, of the relevant passages	Relevant to claim No.
A	WO 2009/098297 A1 (GD SPA [IT]; BIONDI ANDREA [IT]; CAVAZZA LUCA [IT]; SQUARZONI MICHELE) 13 August 2009 (2009-08-13) page 4, line 27 - page 11, line 22 figures 1-15	1,2
A	WO 2007/049138 A1 (GD SPA [IT]; GHINI MARCO [IT]; PETRUCCI LUCA [IT]; NEGRINI STEFANO [IT) 3 May 2007 (2007-05-03) page 5, line 16 - page 13, line 3 figures 1-14	1,2
A	US 5 480 025 A (DRAUCKER JAMES B [US] ET AL) 2 January 1996 (1996-01-02) cited in the application column 4, line 16 - column 9, line 19 figures 1-11	1,2

2

INTERNATIONAL SEARCH REPORT

Information on patent family members

International application No
PCT/IB2014/063480

Patent document cited in search report	Publication date	Patent family member(s)	Publication date
US 4989728 A	05-02-1991	FR 2625077 A1	30-06-1989
		US 4989728 A	05-02-1991
DE 102011119344 A1	11-04-2013	CN 103958369 A	30-07-2014
		DE 102011119344 A1	11-04-2013
		EP 2766282 A1	20-08-2014
		KR 20140074393 A	17-06-2014
		WO 2013053408 A1	18-04-2013
DE 8524779 U1	17-10-1985	NONE	
WO 2009098297 A1	13-08-2009	AT 539979 T	15-01-2012
		CN 101959772 A	26-01-2011
		DK 2250103 T3	13-02-2012
		EP 2250103 A1	17-11-2010
		ES 2377451 T3	27-03-2012
		HR P20120149 T1	31-03-2012
		JP 5497668 B2	21-05-2014
		JP 2011510879 A	07-04-2011
		PT 2250103 E	03-02-2012
		US 2011084120 A1	14-04-2011
		WO 2009098297 A1	13-08-2009
WO 2007049138 A1	03-05-2007	CN 101300176 A	05-11-2008
		EP 1940704 A1	09-07-2008
		EP 2666736 A1	27-11-2013
		JP 5313678 B2	09-10-2013
		JP 2009513448 A	02-04-2009
		KR 20080075845 A	19-08-2008
		US 2009242434 A1	01-10-2009
		WO 2007049138 A1	03-05-2007
US 5480025 A	02-01-1996	US 5480025 A	02-01-1996
		US 5570779 A	05-11-1996