A. J. McCAULEY.

TYPE SETTING DEVICE.

APPLICATION FILED MAR. 14, 1913.

1,133,731. Patented Mar. 30, 1915.

5 SHEETS—SHEET 1.

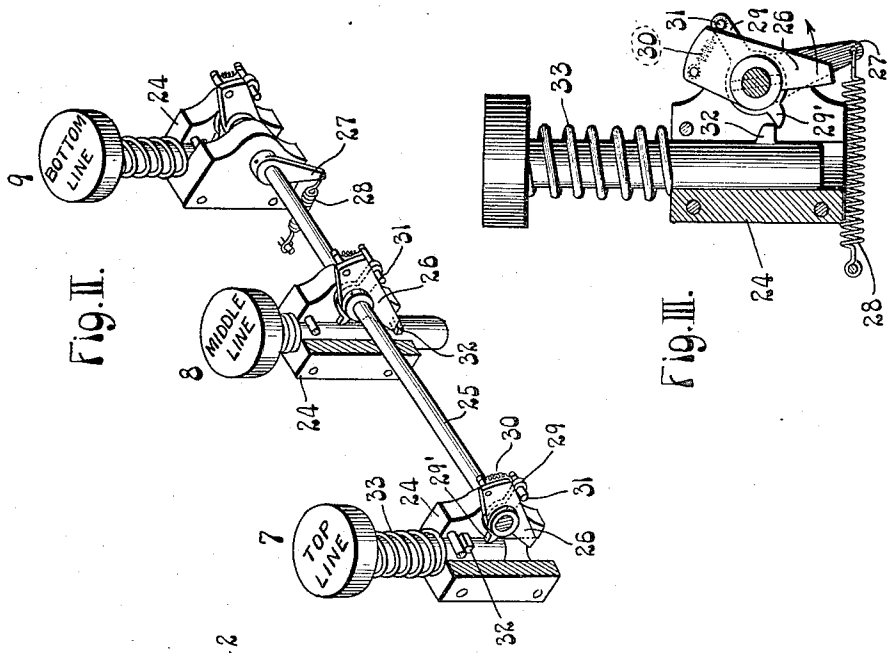

Fig. II.

Fig. III.

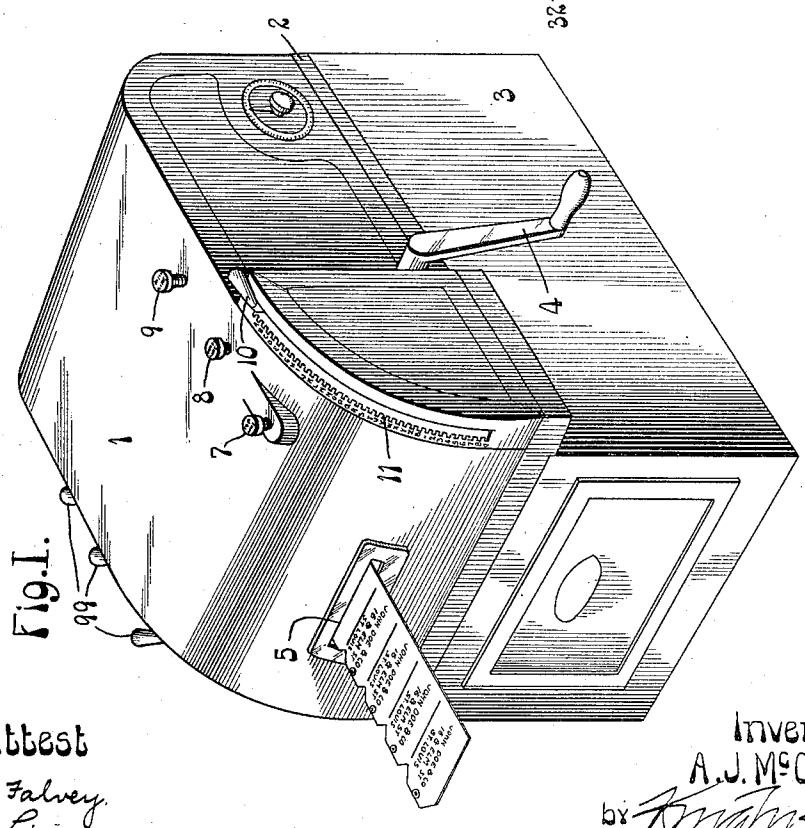

Fig. I.

Attest

M. Falvey.

E. Lewis

Inventor:

A. J. McCauley

by Knight & Cook

Att'ys.

THE NORRIS PETERS CO., PHOTO-LITHO., WASHINGTON, D. C.

A. J. McCAULEY.

TYPE SETTING DEVICE.

APPLICATION FILED MAR. 14, 1913.

1,133,731.

Patented Mar. 30, 1915.

5 SHEETS—SHEET 2.

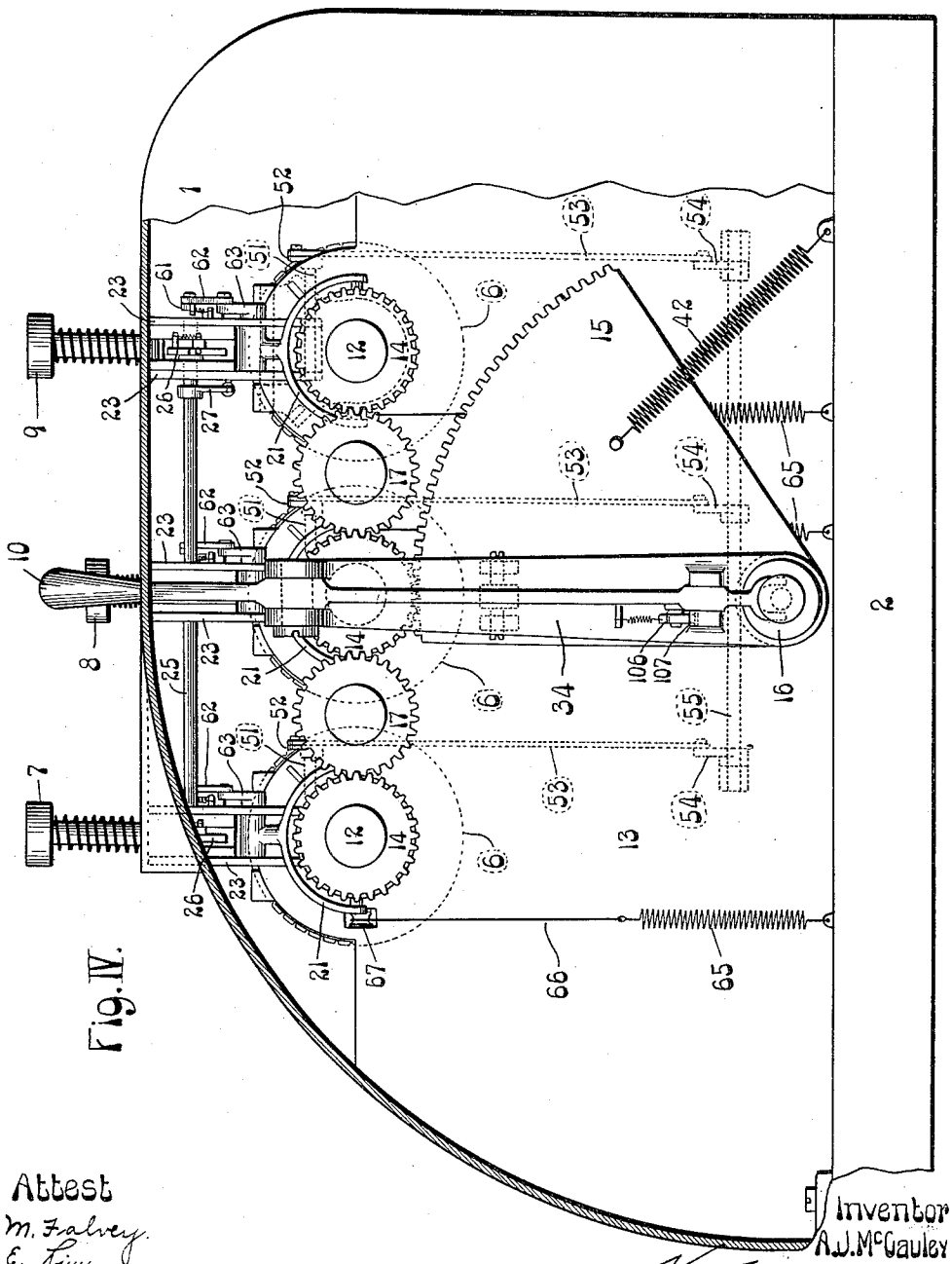

Fig. IV.

Attest

M. Falvey.

E. Linn

Inventor

A. J. McCauley

by Kenyon & Cook Attys.

THE NORRIS PETERS CO., PHOTO-LITHO., WASHINGTON, D. C.

A. J. McCAULEY.

TYPE SETTING DEVICE.

APPLICATION FILED MAR. 14, 1913.

1,133,731. Patented Mar. 30, 1915.

5 SHEETS—SHEET 3.

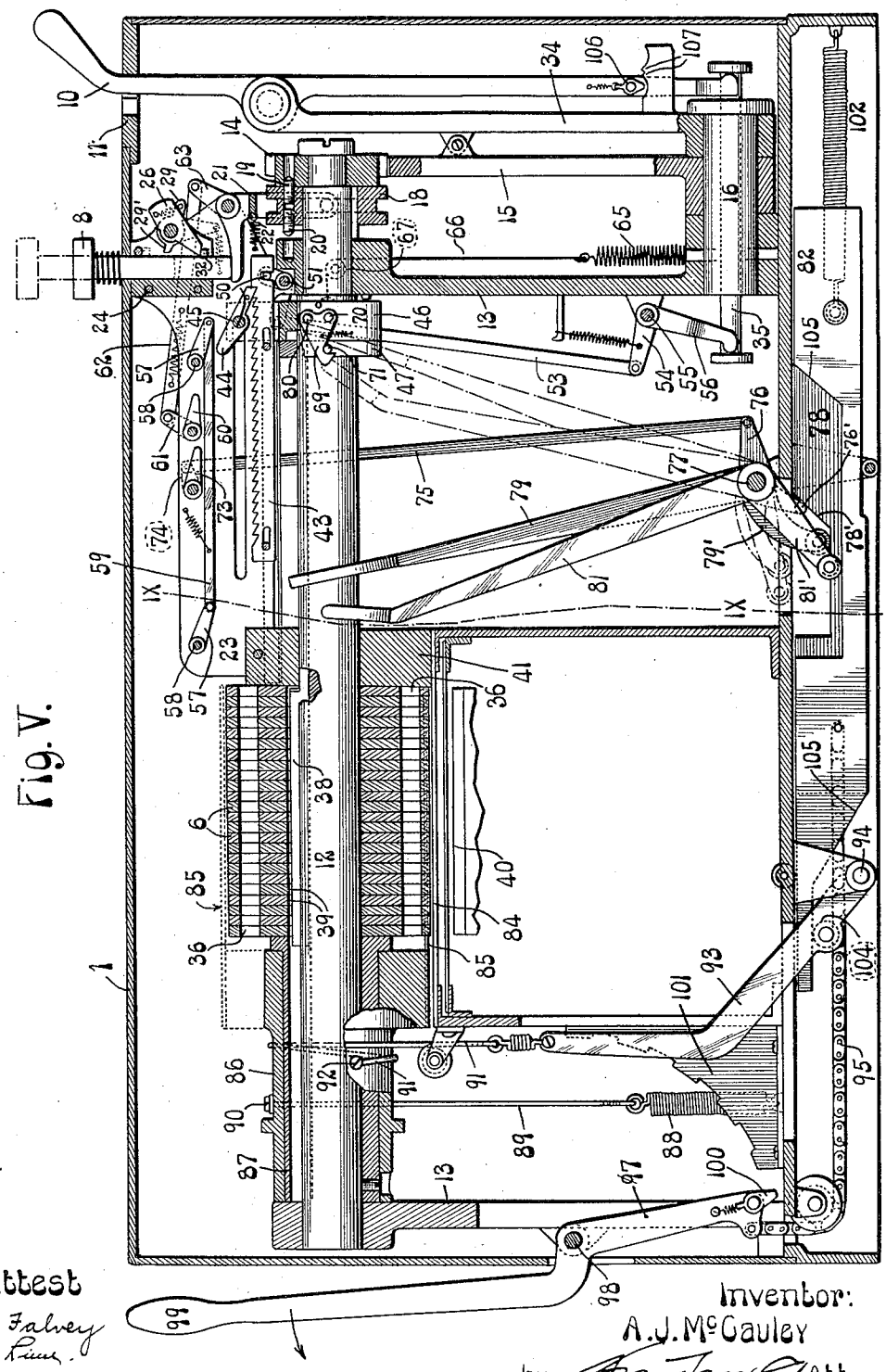

Fig. V.

Attest

M. Falvey

E. Lime.

Inventor:

A. J. McCauley

by Knight & Cook Attys

THE NORRIS PETERS CO., PHOTO-LITHO., WASHINGTON, D. C.

A. J. McCAULEY.

TYPE SETTING DEVICE.

APPLICATION FILED MAR. 14, 1913.

1,133,731. Patented Mar. 30, 1915.

5 SHEETS—SHEET 4.

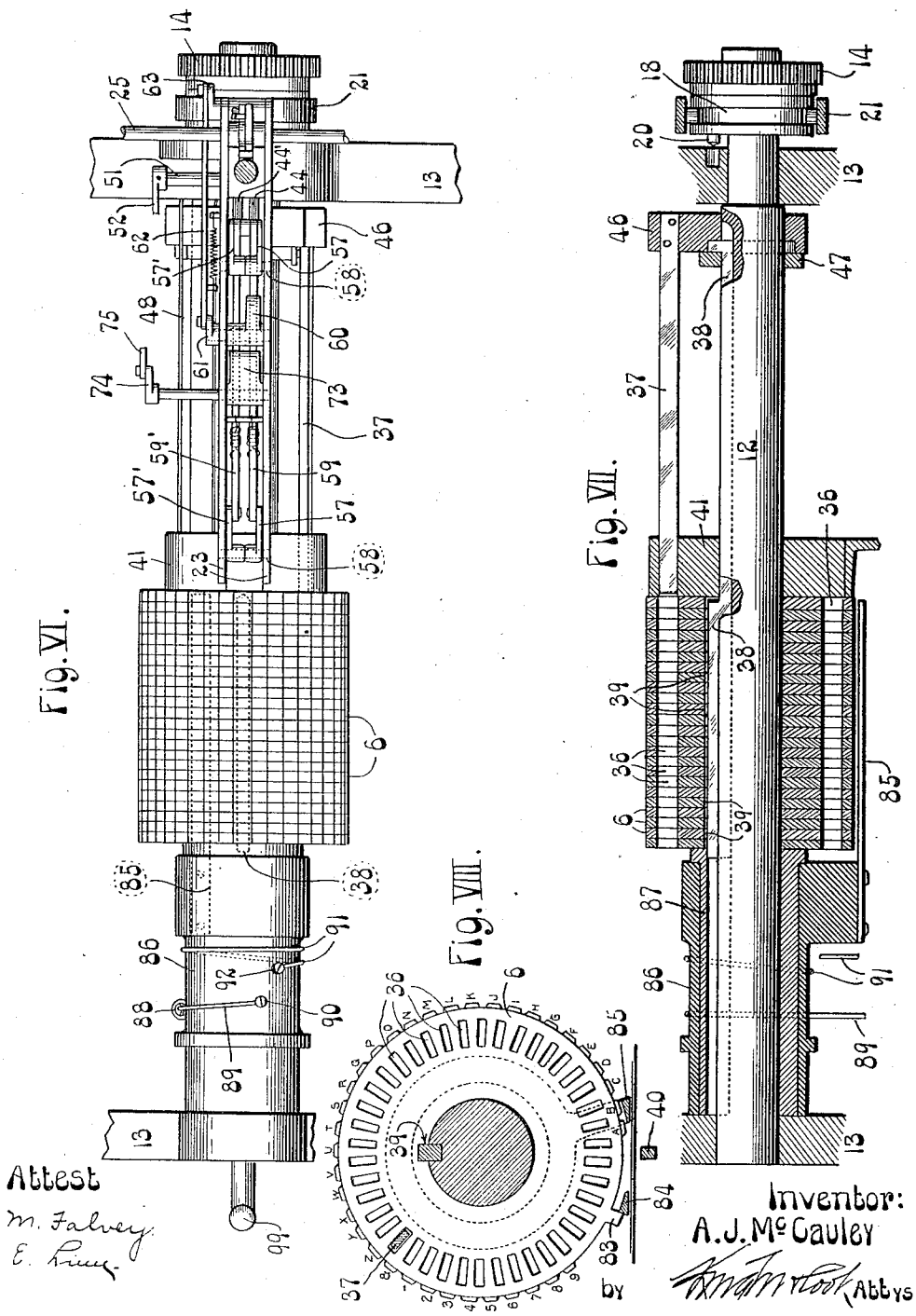

Attest

M. Falvey

E. Lincy

Inventor:

A. J. McCauley

by Kindt & Cook Attys

THE NORRIS PETERS CO., PHOTO-LITHO., WASHINGTON, D. C.

A. J. McCAULEY.

TYPE SETTING DEVICE.

APPLICATION FILED MAR. 14, 1913.

1,133,731.

Patented Mar. 30, 1915.

5 SHEETS—SHEET 5.

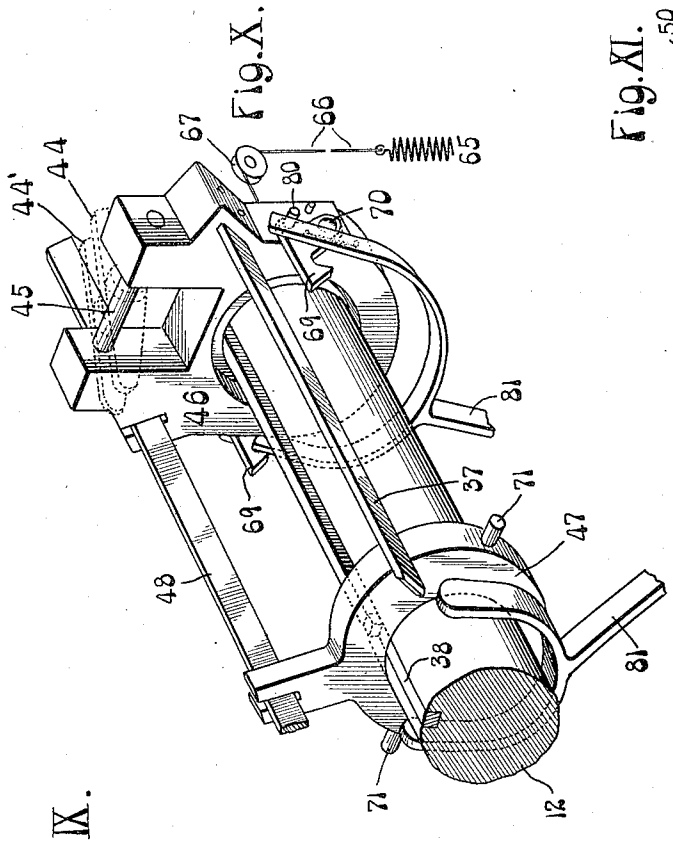

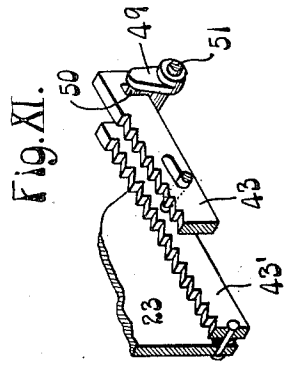

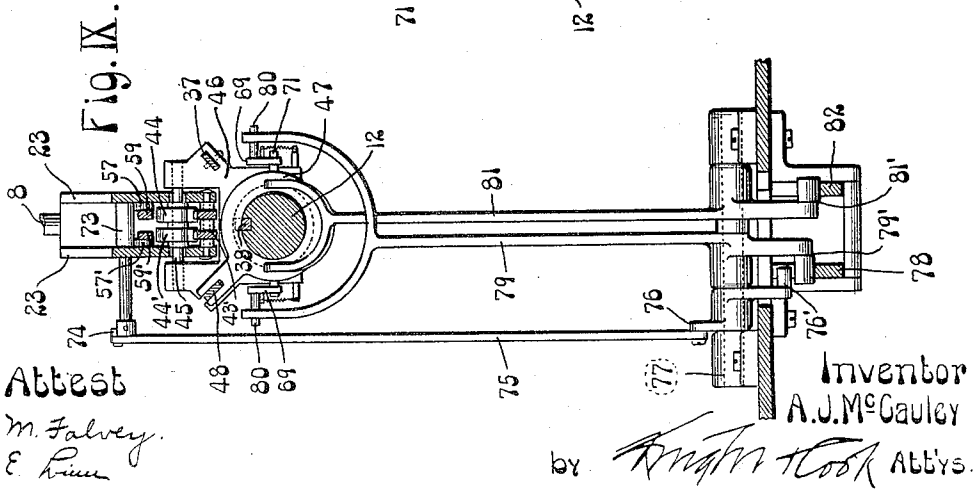

Attest

M. Falvey.

E. Lunn

Inventor

A. J. McCauley

by Knight Bros Atty's.

UNITED STATES PATENT OFFICE.

ALBERT J. McCAULEY, OF ST. LOUIS, MISSOURI, ASSIGNOR TO CHRISTOPHER A. GARVEY AND HOWARD G. COOK, BOTH OF ST. LOUIS, MISSOURI.

TYPE-SETTING DEVICE.

1,133,731. Specification of Letters Patent. Patented Mar. 30, 1915.

Application filed March 14, 1913. Serial No. 754,177.

To all whom it may concern:

Be it known that I, ALBERT J. McCAULEY, a citizen of the United States of America, and a resident of the city of St. Louis and State of Missouri, have invented certain new and useful Improvements in Type-Setting Devices, of which the following is a full, clear, and exact description, reference being had to the accompanying drawings, forming a part of this specification.

My invention relates to a type setting device and has for its object the production of a device of this kind adapted to set up a line or lines of printing type and operable to restore the type to a normal or non-printing position. Briefly stated, the preferred form of my invention comprises type carriers preferably but not essentially in the form of wheels, means under control of the operator for moving the type carriers to locate the type in printing position, locking devices for holding the type carriers in their printing and non-printing positions, said locking devices being preferably in the form of a key movable step by step to release the type carriers one by one and a locking bar also movable step by step to lock the type carriers in printing positions after they have been released from said key. The invention also includes banks of type wheels, or the like, adapted to print lines of type, and a single operating member movable by the operator to turn all of said wheels to their printing positions, combined with means for placing any one of said banks of type wheels under the control of said operating member.

Other objects and advantages as well as the novel details of construction will be hereinafter described and set forth in the claims.

Figure I is a perspective view of an addressing machine embodying the features of my invention. Fig. II is a perspective view showing the keys through the medium of which any one of the banks of type wheels may be placed under the control of the operating handle. Fig. III is an enlarged vertical section showing one of the keys and the key holding devices. Fig. IV is a side elevation of the machine shown in Fig. I, the casing being broken away. Fig. V is a transverse section taken through one of the banks of type wheels. Fig. VI is a top view of one of the banks of type wheels and parts associated therewith. Fig. VII is a longitudinal section taken on an irregular line to show the key for locking the type wheels to the shaft and the locking bar for locking the wheels in printing position. Fig. VIII is a transverse section through one of the banks of type wheels. Fig. IX is a section taken approximately on the line IX—IX, Fig. V. Fig. X is a perspective view of a portion of one of the type wheel shafts and the means for transmitting movement to the key and locking bar. Fig. XI is a fragmentary perspective view showing the fixed ratchet bar and the movable ratchet bar.

In the accompanying drawings: 1 designates the housing of an addressing machine (Fig. I), 2 is the base of the machine and 3 is a box for holding shipping tags. While I have shown my type setting device applied to a machine for addressing shipping tags, it will be understood that the use of the invention is not limited to a machine of this kind and I, therefore, do not deem it necessary to fully describe the feeding and printing devices. The machine shown in Fig. I is provided with a handle 4 for operating the mechanism by which the tags are fed, printed and finally discharged at 5. The machine shown includes three banks of type wheels 6 adapted to be set to print three lines of characters on each shipping tag, three keys 7, 8 and 9 operable to place any one of the banks of type wheels under the control of an operating handle 10, and a quadrant 11 provided with characters corresponding to the type characters on the type wheels.

Before describing the details of construction I will state that the type wheels are adjusted to their printing positions by rocking the setting handle 10 to the desired characters on the quadrant 11 and that the wheels are preferably locked in printing position by pushing the setting handle into the spaces between the teeth on said quadrant.

Each bank of printing wheels 6 is mounted on a shaft 12, journaled in bearings 13 and a pinion 14 is loosely fitted to the end of each shaft 12.

15 designates a sector loosely mounted on a shaft 16 and meshing with one of the pinions 14, Figs. IV and V. Idle gears 17 mesh with the pinions 14 so that all of said pinions will turn in response to movements of the sector 15. A clutch member 18 is splined

to each shaft 12 (Fig. V) and provided with a tooth 19 adapted to enter an aperture in one of the loose pinions 14. Each clutch member 18 also has a tooth 20 adapted to enter an aperture in a bearing 13 so as to lock the shaft against rotation when the clutch member is disengaged from the adjacent pinion 14. A clutch throwing yoke 21 is associated with each clutch member 18 for the purpose of throwing the clutch member into engagement with a pinion 14.

22 designates a spring for throwing the clutch member away from the pinion 14, see Fig. V. Each clutch throwing yoke 21 is in the form of a bell crank lever pivotally supported between a pair of housing plates 23 and having a horizontal arm which lies directly beneath one of the keys 7, 8 or 9. When one of these keys is depressed the clutch throwing yoke controlled thereby occupies the position shown in Fig. V and the clutch member 18 is positioned to rotate with the adjacent pinion 14. The shaft 12 to which the clutch member 18 is splined will then turn with the pinion 14 to turn the type wheels as will be hereinafter described.

When one of the keys 7, 8 or 9 is depressed it is held down and during its downward movement any other depressed key is automatically restored. Each of the keys is slidably fitted to a block 24 arranged between a pair of the housing plates 23. 25 designates a rock shaft rotatably fitted to the blocks 24, and 26 designates locking pawls rigidly secured to the rock shaft 25. An arm 27 secured to the rock shaft 25 is pulled by a spring 28 so that all of the locking pawls 26 tend to rock into engagement with the key stems. A tripping dog 29 is arranged adjacent to each locking pawl 26, said tripping dogs being loosely mounted on the shaft 25 and yieldingly connected to the locking pawls by springs 30. Each tripping dog is provided with a pin 31 engaging the adjacent locking pawl. When a key is depressed, the lug 32 carried thereby strikes a tooth 29′ on a tripping dog 29 with the result of rocking said dog and the rock shaft 25 so as to rock all of the locking pawls 26 in the direction of the arrow (Fig. III). This key movement throws all of the locking pawls 26 away from the key stems and permits the springs 33 to restore any other depressed key. As the key continues to move downwardly from the position seen in Fig. III the lug 32 is released from the dog 29′ and all of the locking pawls are then rocked through the medium of the spring 28. A continued movement of the key will locate its lug 32 beneath a pawl 26 as shown in Fig. V. The key is then locked in its depressed position, and the clutch member 18 adjacent thereto is engaged with a pinion 14.

The sector 15 for setting the pinions 14 is connected to a rock arm 34 and the operating handle 10 is pivoted to the upper end of said arm. The lower end of the setting handle straddles a transmission rod 35 passing through the shaft 16. When the upper portion of the setting handle 10 is rocked between the teeth of the quadrant 11 the lower end of said handle rocks toward the right hand side of the machine, thereby sliding the transmission rod 35, the latter being moved to operate an escapement device which imparts a step by step movement to the device for locking and unlocking the type wheels. The lower end of the handle 10 and the transmission rod 35 are located near the axis of the handle so that the lower end of said handle will be positioned to operate the rod 35 regardless of the position of the upper end of said handle.

I will now describe the type wheels and the type wheel locking devices which I have shown to illustrate an important principle of this invention, particular attention being directed to Figs. VII and VIII. Each type wheel is provided with type characters corresponding to the characters on the quadrant 11, and also provided with a circular row of perforations 36 for the reception of a locking bar 37. A key 38 splined to the shaft 12 is formed with an enlarged portion which lies in notches 39 in the type wheels when said wheels are in their normal or non-printing position. A blank space on the wheel is then located opposite to the platen 40 shown in Fig. VIII. In setting the type wheels the setting handle is rocked to the desired character on the quadrant 11, thereby rocking the entire bank of wheels to locate the corresponding type characters above the platen 40. The setting handle 10 is then rocked between the teeth of the quadrant to operate an escapement device which causes the locking bar 37 and key 38 to move one step to the left. Referring to Fig. VII, it will be noted that this movement of the key and locking bar will release the right hand wheel from the key 38 and engage said wheel with the locking bar 37. The locking bar 37 passes through a stationary guide block 41 and does not rotate, hence the one step movement referred to will lock the right hand wheel against rotation, and leave the remaining wheels interlocked with the key 38. The remaining wheels may be set up, one by one, in the manner just described and the setting handle is finally restored to its normal or starting position by a spring 42, connected to the sector 15, Fig. IV.

The means for advancing the key 38 and locking bar 37 step by step comprises a movable ratchet bar 43 adapted to reciprocate between the housing plates 23, a pawl 44 coöperable with said ratchet bar, said pawl being rockably mounted on a pivot rod 45 passing through slots in the housing plates 23. The pivot rod 45 is carried by a

block 46 to which the locking bar 37 is secured, and this block 46 is formed with a counterbore to receive the extended end of the key 38. The block 46 and a collar 47 are slidably fitted to the shaft 12 and prevented from rotating by a stationary guide bar 48. The block 46 is advanced step by step in response to movements of the ratchet bar 43 so as to move the locking bar 37 and key 38 through the bank of type wheels. The ratchet bar 43 is reciprocated through the medium of a rocker arm 49 provided with a pin 50 located in a slot in the end portion of said ratchet bar. 51 designates a rock shaft to which the rocker arm 49 is connected and 52 is an arm secured to said rock shaft 51. It is to be understood that each bank of type wheels has a set of the ratchet or escapement mechanism associated with it and each set of this mechanism includes a rock shaft 51 and an arm 52. The arms 52 are connected by means of connecting bars 53 to arms 54 on a shaft 55, the latter being provided with an operating arm 56 which straddles the slidable transmission rod 35, see Figs. IV and V. When the setting handle 10 is rocked between the teeth of the quadrant 11, motion is imparted to the following parts: The transmission rod 35 slides in the shaft 16; the arm 56 rocks, to impart a rocking movement to the shaft 55 and all of the arms 54 carried thereby; all of the connecting bars 53 are then pulled downwardly, thereby rocking all of the short rock shafts 51 and reciprocating all of the movable ratchet bars 43. One of these ratchet bars 43 is engaged with a pawl 44 so that the slidable block 46 to which said pawl is secured advances one step to the left.

The pawls 44 are forced into engagement with the ratchet bars 43 by light springs (see Fig. V); however, these pawls are under the control of the keys 7, 8 and 9 and one of the pawls is automatically thrown away from its ratchet bar when one of the said keys moves upwardly. The means for disengaging the pawls 44 from the ratchet bars 43 comprises a pair of crank arms 57 arranged between the housing plates 23 and loosely supported by shafts 58.

59 designates a bar connecting the crank arms 57 and located directly above a pawl 44.

60 is a pawl throwing arm located between the housing plates 23 and operable to depress the connecting bar 59 so as to disengage the pawl 44 from the ratchet bar. The pawl throwing arm 60 is fixed to a rock shaft having a rock arm 61, said rock arm being connected by a bar 62 to an arm 63 secured to the clutch throwing yoke 21. When one of the keys 7, 8 or 9 is moved upwardly the clutch throwing yoke 21 associated therewith is rocked to throw the clutch member 18 as previously described, and this movement of the clutch throwing yoke moves the arm 63, connecting bar 62, arm 61 and pawl throwing arm 60, so as to depress the connecting bar 59 and thereby disengage the pawl 44 from the ratchet bar 43. When the pawl is released from the ratchet bar, the latter will continue to move in response to movements of the setting handle 10, but this movement will not be transmitted to the block 46 to which the released pawl is connected.

To insure an accurate step by step movement of the type wheel locking bar 37 and key 38, the sliding block 46 may be yieldingly pulled to the right by a spring 65 secured to a cable 66 passing over a pulley 67 and connected to the block 46. The mechanism for moving the ratchet bar 43 may be timed to slide said ratchet bar a distance greater than one step and when said mechanism is released the spring 65 will move the block 46 backwardly until it is stopped by a set of fixed stop members located exactly one step apart. These stop members are in the form of a stationary ratchet bar 43′ arranged alongside of the movable ratchet bar 43 and fixed to a housing plate 23, see Figs. IX and XI. A pawl 44′ pivoted to the cross rod 45 rides along the fixed ratchet bar 43′, and when the block 46 is pulled backwardly this pawl 44′ engages the vertical face of one of the teeth on bar 43′, thereby positively stopping the block 46 in a predetermined position. The stopping positions are determined by the teeth on the fixed ratchet bar 43′ and the length of each of these teeth corresponds to the thickness of one type wheel, hence the locking devices operated by the block 46 are accurately stepped from one type wheel to another during each operation of the setting handle 10.

To cause the locking key 38 on the type wheel shaft 12 to follow the block 46 when the latter moves backwardly, the collar 47 is secured to said block 46 and the offset end portion of the key 38 is confined between said collar 47 and block 46. The connection between these parts comprises a pair of pawls 69 pivoted at 70 to opposite sides of the block 46 and adapted to interlock with pins 71 on the collar 47.

The means for restoring the type wheels.—Before describing the details of construction of this part of the machine I will state that the first step in restoring the type wheels is to release the pawls 44 and 44′ from the ratchet bars 43 and 43′. The block 46 is then restored to withdraw the locking bar 37 from the type wheels. This unlocks all of the wheels that have been turned to their printing positions. The wheels are then returned to their normal or non-printing position by means of a rotary sweep movable around the axis of the

wheels, and the restored wheels are finally locked in their non-printing position by pulling the shaft key 38 through the notches 39 in the wheels. This locates the parts in the position seen most clearly in Fig. VII.

To permit the release of the pawl 44′ from the fixed ratchet bar 43′ a pair of crank arms 57′ are arranged between the housing plates 23 and loosely mounted on the shafts 58 which support the arms 57. The arms 57′ are connected by a bar 59′ arranged alongside of the bar 59 and located directly over the pawl 44′ (see Figs. VI and IX). Both of the pawls 44 and 44′ are released by a wide pawl throwing arm 73 overlying both of the connecting bars 50 and 50′ and operable to depress both of said bars. The pawl throwing arm 73 is fixed to a rock shaft provided with an operating arm 74 connected by a long bar 75 to a cam actuated arm 76. Arm 76 is loosely fitted to a shaft 77 and provided with an extension 76′ which engages a slidable cam bar 78.

The means for restoring the block 46 independently of the collar 47 comprises a bifurcated sweep arm 79 adapted to engage pins 80 on the pawls 69. The sweep arm 79 is also loosely mounted on the shaft 77 and it is provided with an extension 79′ which engages the cam bar 78. When the sweep arm 79 is rocked from the position shown in full lines (Fig. V) to the position shown in dotted lines, its upper end presses against the pins 80 on the pawls 69 so as to first disengage said pawls from the pins 71 on the collar 47 and afterward slide the block 46 to the position shown in Fig. V. A bifurcated sweep arm 81 pivoted to the shaft 77 is movable to restore the collar 47 and the shaft key 38. The sweep arm 81 has an extension 81′ engaging a cam bar 82.

Each type wheel 6 is provided with a lug 83 that engages a stop bar 84 when the wheel occupies its non-printing position and when the type wheels are set for printing the lugs 83 lie in different positions around the periphery of the bank of wheels. The wheels are restored by moving a rotary sweep bar 85 (Figs. V, VII and VIII) around the axis of the wheels so as to "pick up" the lugs 83 and move said lugs into engagement with the stop bar 84. The sweep bar 85 is fixed to a sleeve 86 surrounding the shaft 12 and rotatably fitted to an inner sleeve 87. The inner sleeve 87 is fixed to the shaft and provided with a longitudinal groove for the reception of the enlarged portion of the key 38. The sole function of this inner sleeve is to provide a circular bearing surface for the sweep carrying sleeve 86. The sweep bar 85 is normally held in the position seen in Fig. VIII by a spring 88 fixed to a cable 89. The upper end of the cable 89 is wound partially around the sleeve 86 and secured thereto by a screw 90. A restoring cable 91 is wound around the sleeve 86 and attached thereto by a screw 92. The restoring cable is yieldingly connected to a restoring arm 93 (Fig. V) pivotally supported at 94 and provided with a roller which lies under the cam bar 82.

The cam bars 78 and 82 are suitably connected together and an operating chain 95 is connected to said bars. This chain passes under a pulley as shown in Fig. V and is connected to a restoring lever 97 pivoted at 98 and having a handle 99. The type wheels and their locking devices are restored by rocking the handle 99 in the direction of the arrow (Fig. V) and, to insure a full stroke, the operating lever 97 may be provided with a pawl 100 movable along a sector 101. The pawl will engage with the teeth of the sector 101 so as to prevent retrograde movement of the operating handle until said pawl passes beyond the upper end of the sector 101. The restoring lever 97 may then be returned by a spring 102 connected to the right hand end of the cam bars 78 and 82.

The cam bars impart movement to the restoring devices in the following manner. The first to be actuated is the arm 76 and its extension 76′, the latter being engaged with a cam face 78′ so that it moves upwardly to operate the means for releasing both of the pawls 44 and 44′ from the ratchet bars. The arm 79 is then rocked through the medium of its extension 79′ which rides upwardly on the cam face 78′. This arm disengages the slidable block 46 from the collar 47 and restores said block to the position seen in Fig. V. This operation releases the locking bar 37 from the type wheels and the next step is to turn the rotary sweep 85 so as to restore the wheels. The sweep is turned by means of the arm 93 having the roller 104 which is forced downwardly by the cam face 105. The type wheels are finally locked in position by restoring the sliding collar 47 that pulls the shaft key 38 to its starting position. The collar 47 is restored when the cam face 105 moves under the extension 81′ of the sweep arm 81.

To insure a full stroke of the setting handle 10 when it is moved between the teeth of the quadrant 11, said handle is provided with a spring actuated pawl 106 which rides over teeth 108 so that the handle cannot be released from the teeth of the quadrant 11 until the pawl 106 has passed beyond the teeth 107.

The key controlled clutch member 18 is designed so that it can be released from the pinion 14 only when the setting handle 10 occupies its normal or starting position. It will be noted (see Fig. V) that the tooth 19 on the clutch member 18 can be disengaged from the pinion 14 only when the tooth 20

registers with the aperture in the bearing 13. At this time the wheels that have not been disengaged from the shaft key 38 are in their non-printing position and they must occupy this position after the other wheels of the bank are set to printing position.

For the purpose of explaining the practical use of this invention I have shown and fully described numerous details of construction entering into one form of my type setting device, but it will be understood that many of these structural details are not essential to the invention set forth in the claims.

I claim:

1. A device of the character described comprising a bank of type wheels, a rotatable shaft passing through said type wheels, a key operable to lock and unlock said type wheels, said key being carried by said shaft, means for turning said shaft to move said wheels to their printing positions, a locking bar operable to lock said type wheels in their printing positions, means for restoring said locking bar to release said type wheels, means for restoring the type wheels after said locking bar is restored, and means for restoring said key after the type wheels are restored.

2. A device of the character described comprising a bank of type wheels, a shaft passing through said type wheels, a slidable key for locking said wheels to said shaft, means for turning said shaft to move said wheels to their printing positions, a slidable locking bar movable into engagement with said wheels to lock them in their printing positions, means for sliding said key and locking bar to unlock said type wheels from said shaft and to lock said wheels in their printing positions, means for restoring said locking bar, means for restoring said type wheels after the locking bar is restored, and means for restoring said key after the wheels are restored.

3. A device of the character described comprising a bank of type wheels, a shaft passing through said type wheels, two locking devices, one of which is adapted to lock said type wheels to said shaft, the other locking device being operable to lock said type wheels in their printing positions, means for turning said type wheels to their printing positions, means for moving said locking devices simultaneously to release one of the locking devices and simultaneously lock said wheels in their printing positions by means of the other locking device, and restoring means comprising means for restoring one of said locking devices to release the type wheels, means for turning the type wheels to their normal or non-printing position after said type wheels are released and means for restoring the other locking device after the type wheels are returned to their normal or non-printing position.

4. A device of the character described comprising a bank of type wheels, each of said wheels being provided with an abutment on its periphery, a key operable to lock and unlock said type wheels, means for turning said type wheels to their printing positions, a locking bar operable to lock said type wheels in their printing positions, means for moving said key and locking bar so as to lock said wheels in their printing positions, and restoring devices including means for restoring said locking bar to release said type wheels, a rotary sweep movable about the axis of said wheels and adapted to engage said abutments, means for turning said sweep to restore the type wheels after the locking bar is restored, and means for restoring said key after the type wheels are restored.

5. A device of the character described comprising banks of type wheels, sets of traveling locking devices associated with said banks of type wheels, means for turning said type wheels to printing positions, means for operating each of said sets of traveling locking devices to lock the type wheels in their printing positions, and selective devices for placing any one of said banks of type wheels and the set of traveling locking devices asscciated therewith under the control of the operator.

6. A device of the character described comprising banks of type wheels, a scale provided with characters corresponding to the type characters on said type wheels, means for turning said type wheels to their printing positions, said means including a setting member movable along said scale; locking devices associated with each bank of type wheels, said locking devices being movable step by step to lock the type wheels in their printing positions, and means for placing any one of said banks of type wheels and the locking devices associated therewith under the control of said setting member.

7. A device of the character described comprising banks of type wheels, means for turning said type wheels to their printing positions, said means including a setting member under the control of the operator, and keys and key actuated devices for placing any one of said banks of wheels under the control of said setting member, said key actuated devices being operable to automatically restore one of said keys upon the operation of another of said keys.

8. A device of the character described comprising banks of type wheels, means for turning said type wheels to their printing positions, said means including a setting member and clutch members, clutch throwing devices operable to place any one of

said banks of type wheels under the control of said setting member, said clutch throwing devices comprising keys, a key retaining dog associated with each key, and means for connecting said key retaining dogs.

9. A device of the character described comprising a bank of type wheels, traveling locking devices associated therewith, means for setting said wheels to their printing positions, and cam-actuated sweep arms for restoring said wheels and locking devices.

10. A device of the character described comprising a bank of type wheels, means for turning said type wheels to their printing positions, said means including a rockable arm, a setting handle pivoted to said arm and extended to a point near the axis of said arm, a locking device associated with said bank of type wheels, means for transmitting the movement of said setting handle to said locking device, the last named means including a transmission device located near the axis of said arm.

11. A device of the character described comprising a bank of type wheels, a key operable to lock and unlock said type wheels, means for turning said wheels to their printing positions, a locking bar operable to lock said type wheels in their printing positions, a sweep for restoring said locking bar to release said type wheels, a sweep for restoring the type wheels after said locking bar is restored, and a sweep for restoring said key after the type wheels are restored.

12. A device of the character described comprising a bank of type wheels, a shaft passing through said type wheels, a slidable key for locking said wheels to said shaft, means for turning said shaft to move said wheels to their printing positions, a slidable locking bar movable into engagement with said wheels to lock them in their printing positions, means for connecting said key and locking bar, an escapement device for sliding said key and locking bar to unlock said type wheels from said shaft and to lock said wheels in their printing positions, a sweep for restoring said locking bar, means for restoring said type wheels after the locking bar is restored, and a sweep for restoring said key after the wheels are restored.

13. A device of the character described comprising a bank of type wheels, two locking devices, one of which is adapted to lock said type wheels in their normal or non-printing position, the other locking device being operable to lock said type wheels in their printing positions, means for turning said type wheels to their printing positions, means for moving said locking devices simultaneously to release one of the locking devices and simultaneously lock said wheels in their printing positions by means of the other locking device, and restoring means comprising a rockable cam actuated sweep for restoring one of said locking devices to release the type wheels, a rotary sweep for turning the type wheels to their normal or non-printing position after said type wheels are released, and a rockable cam actuated sweep for restoring the other locking device after the type wheels are returned to their normal or non-printing position.

14. A device of the character described, comprising a bank of type wheels, means for turning said wheels to printing positions, locking devices movable in a direction parallel to the axis of said wheels, each of said wheels being provided with an abutment, means for restoring said wheels; the last named means including a rotary sweep movable about the axis of said wheels and adapted to engage said abutments, and rockable sweep arms for restoring said locking devices.

15. A device of the character described comprising banks of type wheels, a notched scale provided with characters corresponding to the type characters on said type wheels, means for turning said type wheels to their printing positions and thereafter locking said wheels; said means including a setting handle movable into the notches on said scale, and means for placing any one of said banks of type wheels under the control of said setting handle.

16. A device of the character described comprising banks of type wheels, a scale provided with characters corresponding to the type characters on said type wheels, means for turning said type wheels to their printing positions; said means including a setting handle movable along said scale, and key controlled devices for selecting any one of said banks of type wheels and placing the selected bank of type wheels under the control of said setting handle.

17. A device of the character described comprising banks of type wheels, a notched scale provided with characters corresponding to the type characters on said type wheels, means for turning said type wheels to their printing positions, said means including a setting handle movable along said notched scale; locking devices associated with each bank of type wheels, said locking devices being movable in response to a movement of said setting handle, and means for placing any one of said banks of type wheels and the locking devices associated therewith under the control of said setting handle.

18. A device of the character described comprising banks of type wheels, means for turning said type wheels to their printing positions, said means including a single setting handle under the control of the oper-

ator, and keys and key actuated devices for selecting and placing any one of said banks of wheels under the control of said setting handle.

19. A device of the character described comprising banks of type wheels, means for turning all of said type wheels to their printing positions, said means including a single setting handle under the control of the operator, and keys and key actuated devices for selecting and placing any one of said banks of wheels under the control of said setting handle; said key actuated devices being operable to automatically release one of the banks of wheels from said setting handle.

ALBERT J. McCAULEY.

In the presence of—
M. FALVEY,
E. LINN.

Copies of this patent may be obtained for five cents each, by addressing the "Commissioner of Patents, Washington, D. C."