US 20110220507A1

(19) United States

(12) Patent Application Publication

Suh et al.

(10) Pub. No.: US 2011/0220507 A1

(43) Pub. Date: Sep. 15, 2011

(54) MICROCHANNEL-TYPE FLUID MIXING APPARATUS USING AC ELECTROOSMOTIC FLOWS (AC-EOF) AND INCLINED-ELECTRODE PATTERNS

(76) Inventors: **Yongkweon Suh**, Busan (KR); **Sangmo Kang**, Busan (KR); **Younggun Heo**, Busan (KR); **Younghun Jeon**, Busan (KR); **Wonhyuk Jung**, Busan (KR)

(21) Appl. No.: **12/748,072**

(22) Filed: **Mar. 26, 2010**

(30) **Foreign Application Priority Data**

Mar. 11, 2010 (KR) 10-2010-0021994

Publication Classification

(51) **Int. Cl.**
C25B 9/04 (2006.01)

(52) **U.S. Cl.** **204/601**

(57) **ABSTRACT**

The present invention provides a microchannel-type fluid mixing apparatus using AC electroosmotic flows (AC-EOF) for inducing the mixing of fluid materials flowing in a microchannel and inclined-electrode patterns. The fluid mixing apparatus according to the present invention enables the electrical connection between the respective electrodes arranged inclinedly along a lengthwise direction of a microchannel on an inner bottom wall surface of the microchannel and the power supply unit for supplying AC power is controlled by the controller so that AC power form the power supply unit is applied to the electrodes in two patterns alternately performed over time. Thus, the fluid materials vortically flow in a vertical direction over the respective electrodes while changing their rotational direction over time, leading to a smooth mixing of the fluid materials. Particularly, the present invention enhances the mixing efficiency of fluid materials while employing a simplified electrode arrangement structure.

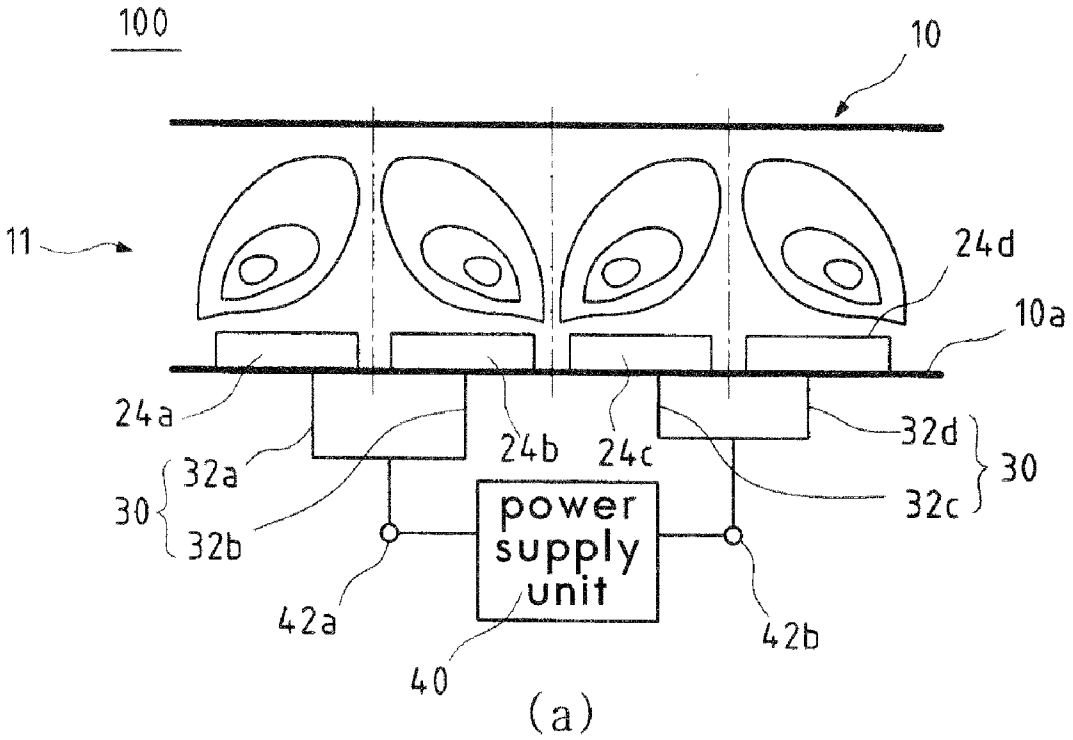

(a)

FIG. 1

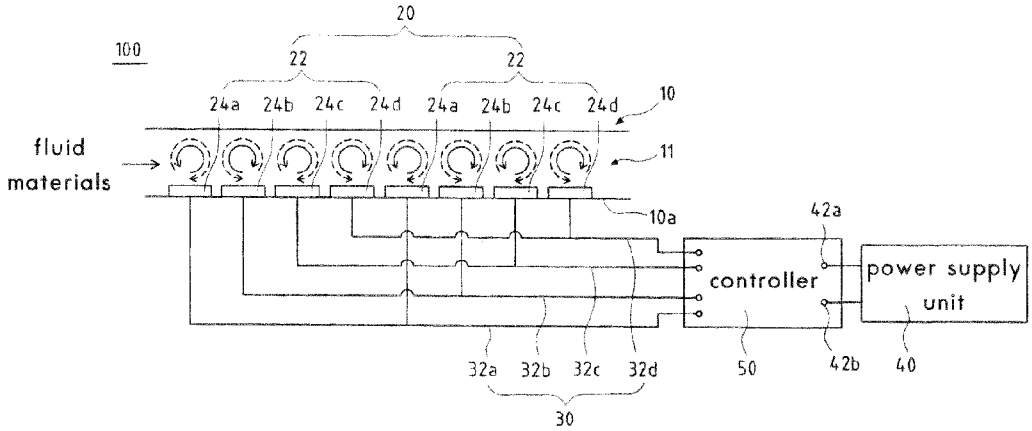
20
100
22
22
24a
24b
24c
24d
24a
24b
24c
24d
10
fluid
materials
11
10a
42a
controller
power supply
unit
32a
32b
32c
32d
50
42b
40
30

FIG. 2

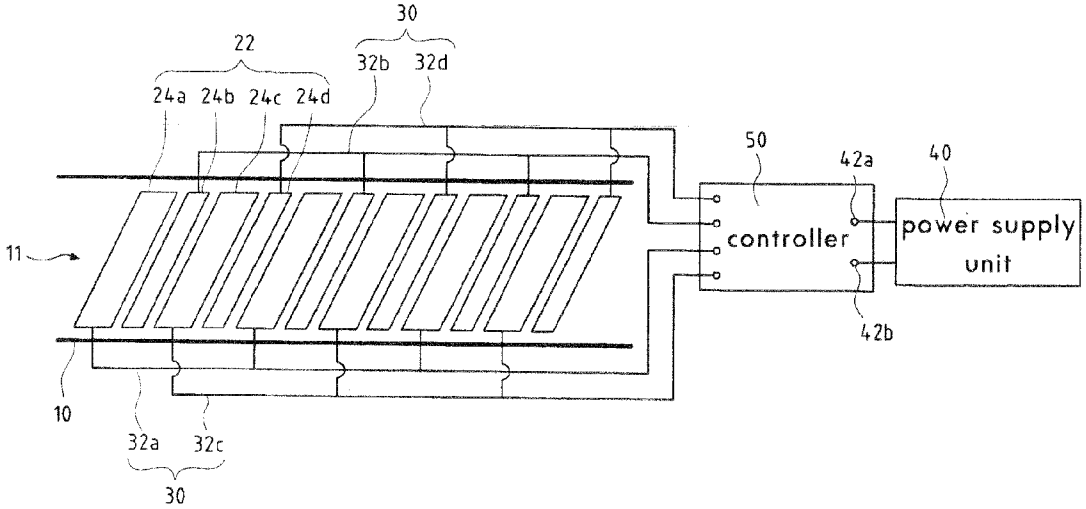
30
22
32b
32d
24a
24b
24c
24d
50
42a
40
11
controller
power supply
unit
42b
10
32a
32c
30

FIG. 3

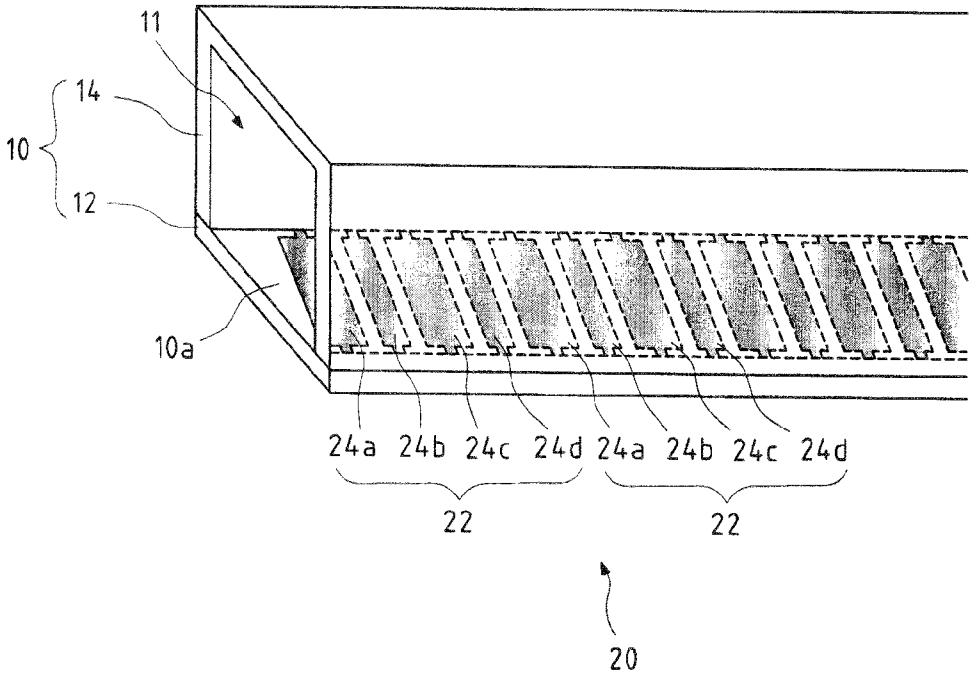

FIG. 4

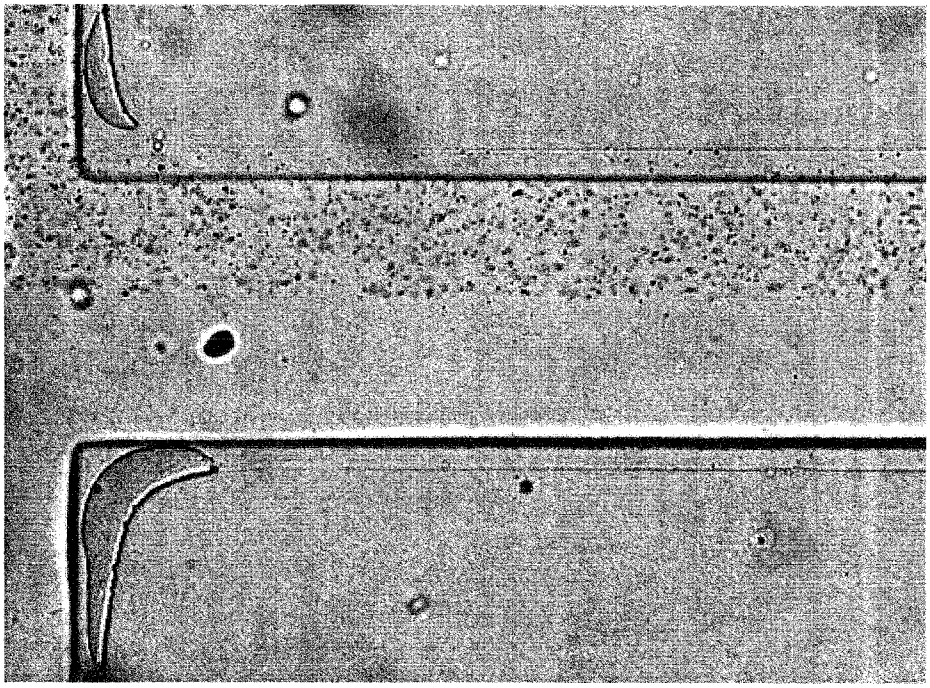

FIG. 5

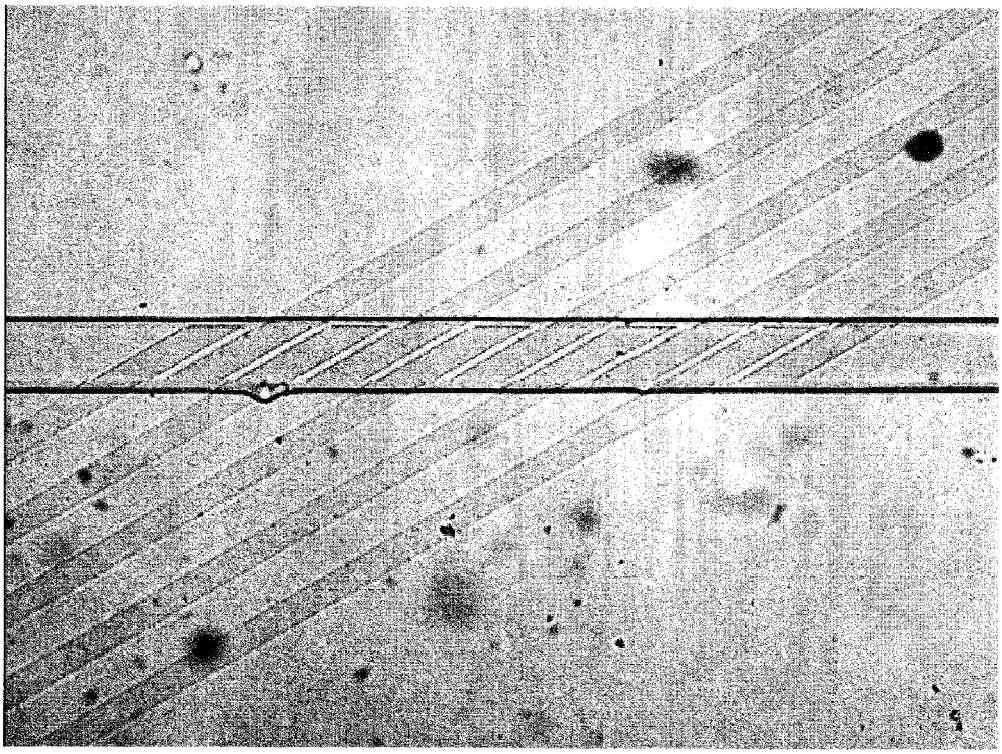

FIG. 6

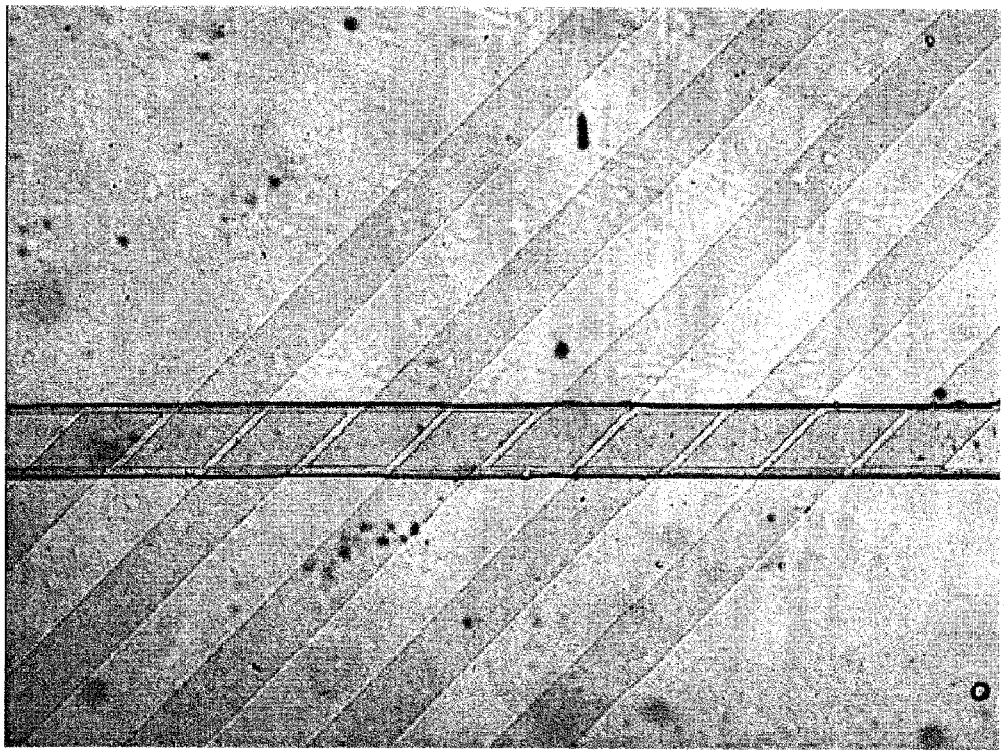

FIG. 7

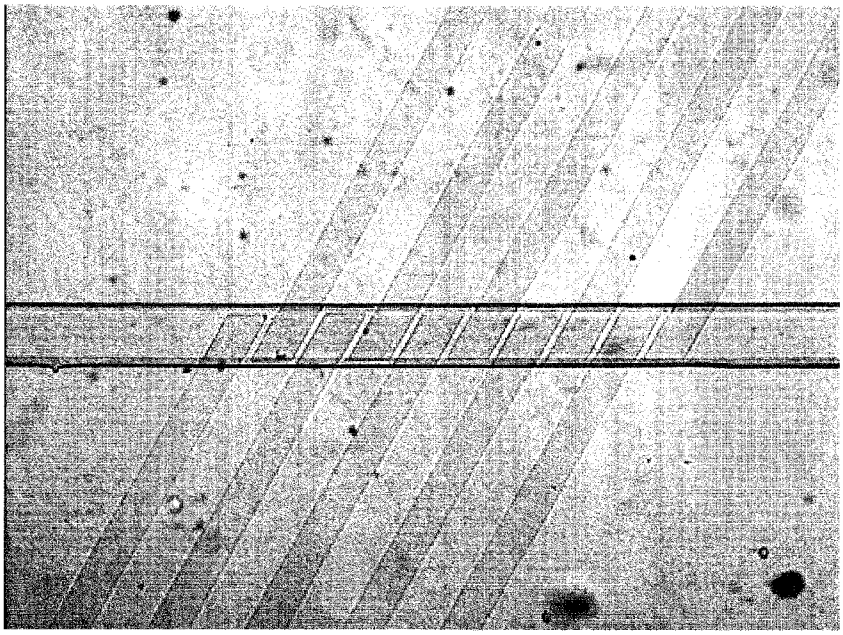

FIG. 8

FIG. 9

FIG. 10

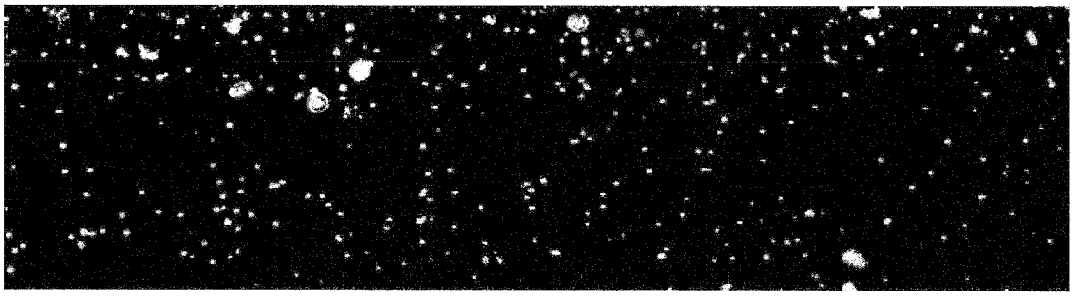

FIG. 11

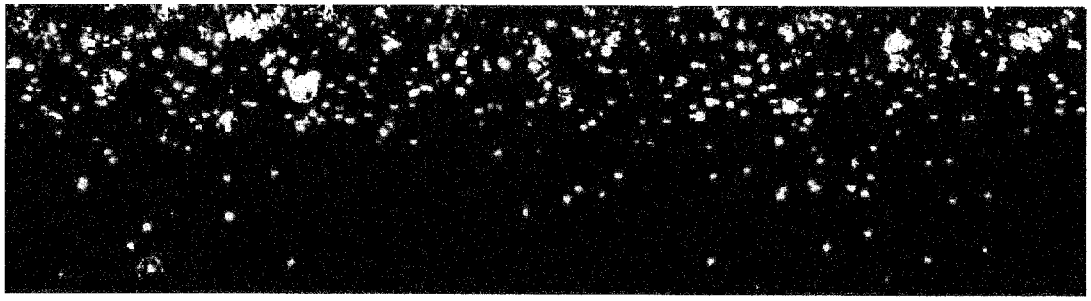

FIG. 12

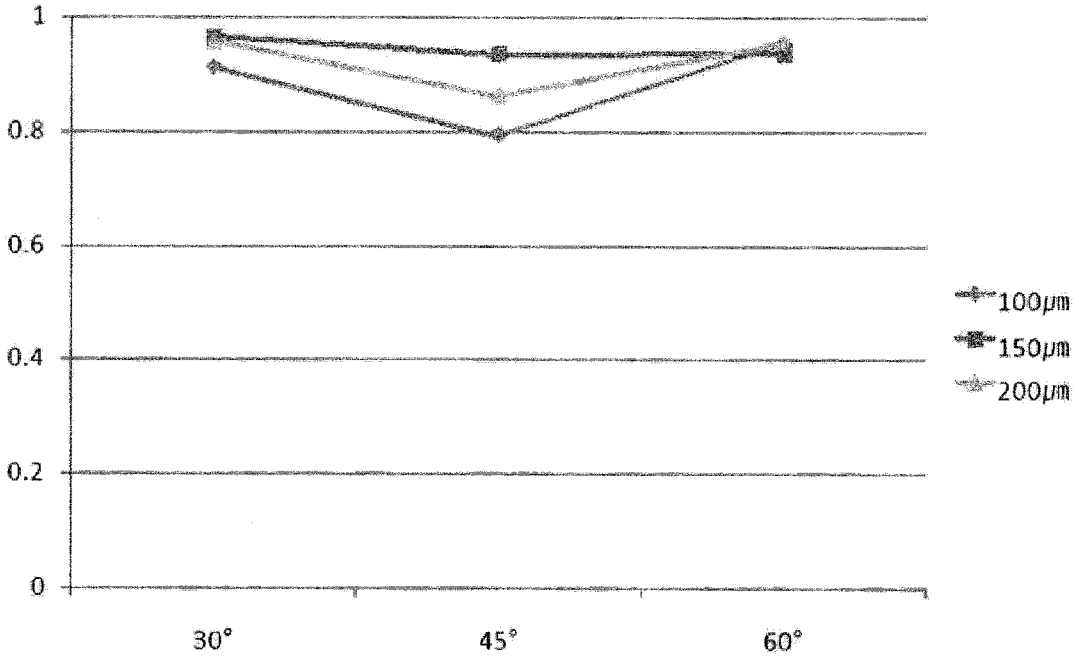

FIG. 13

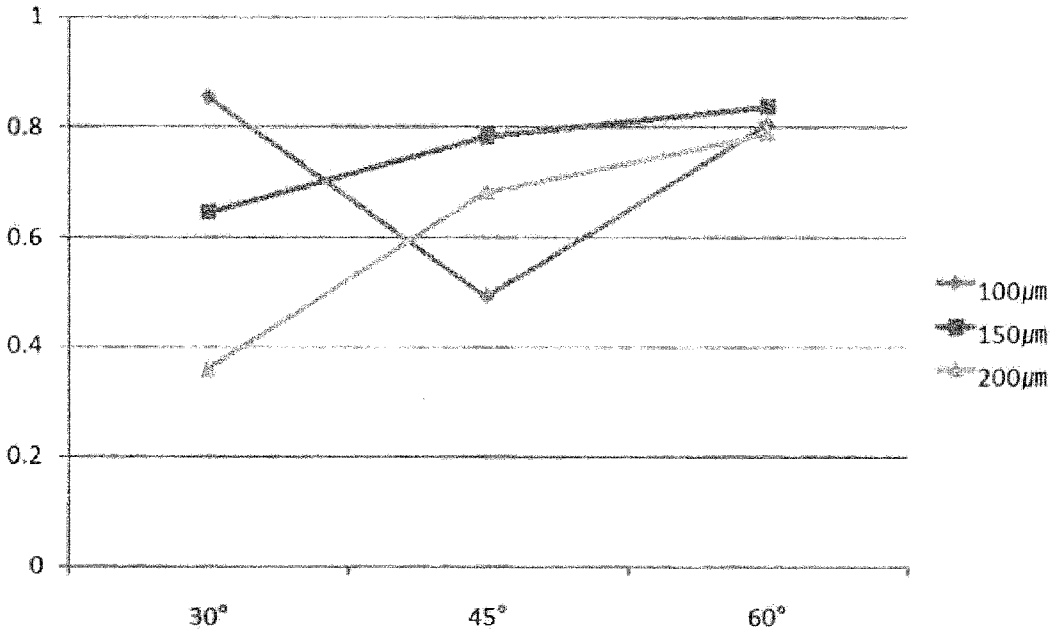
1
0.8
0.6
0.4
0.2
0
30°
45°
60°
100μm
150μm
200μm

FIG. 14

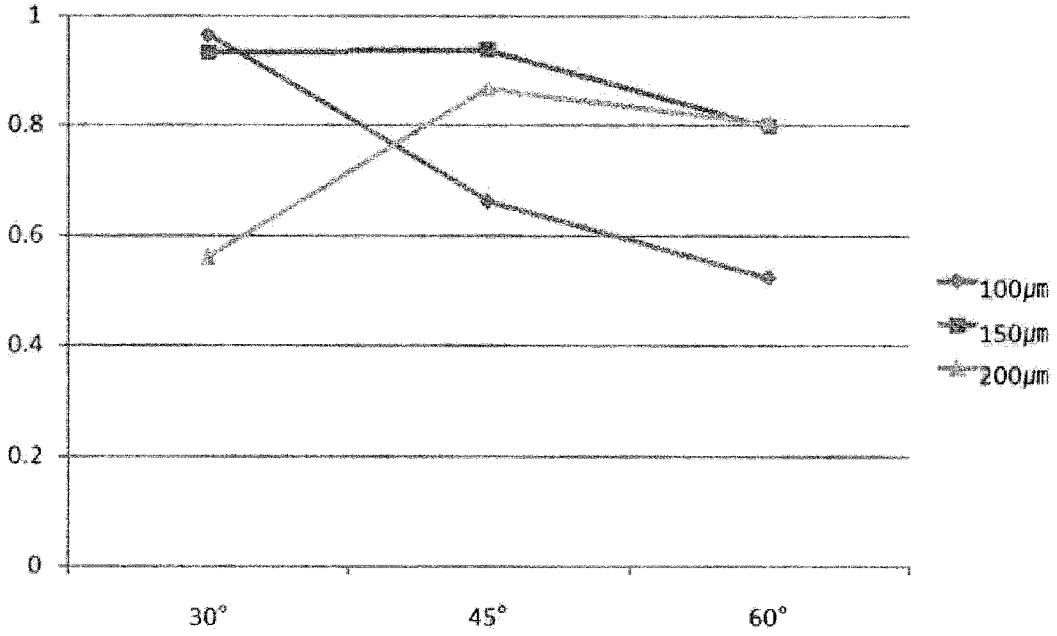
1
0.8
0.6
0.4
0.2
0
30°
45°
60°
100μm
150μm
200μm

FIG. 15

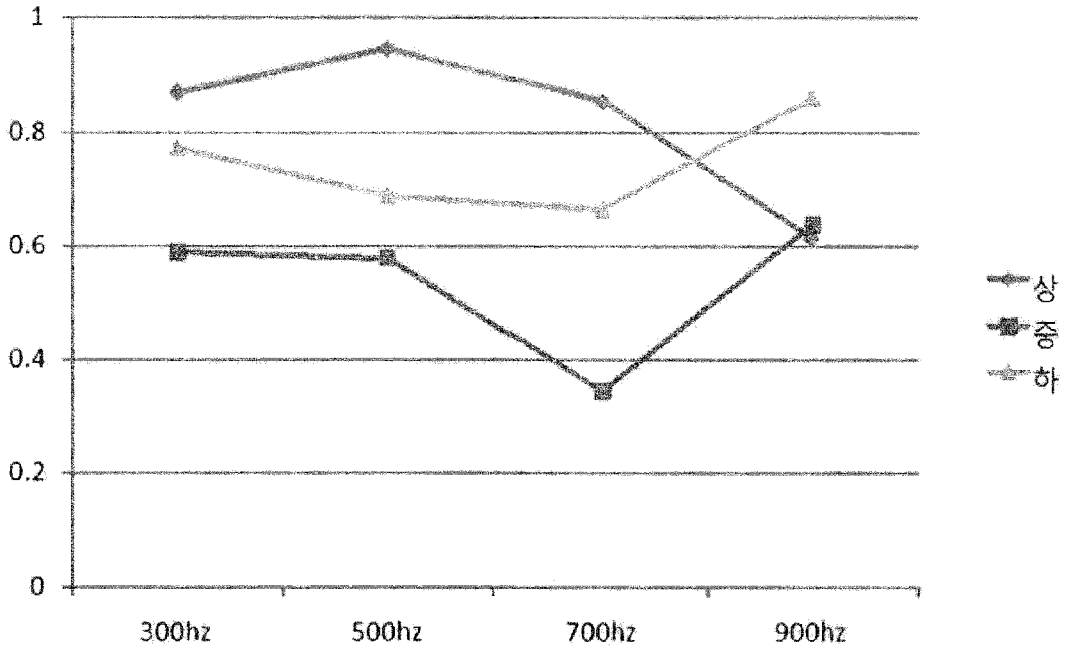

FIG. 16

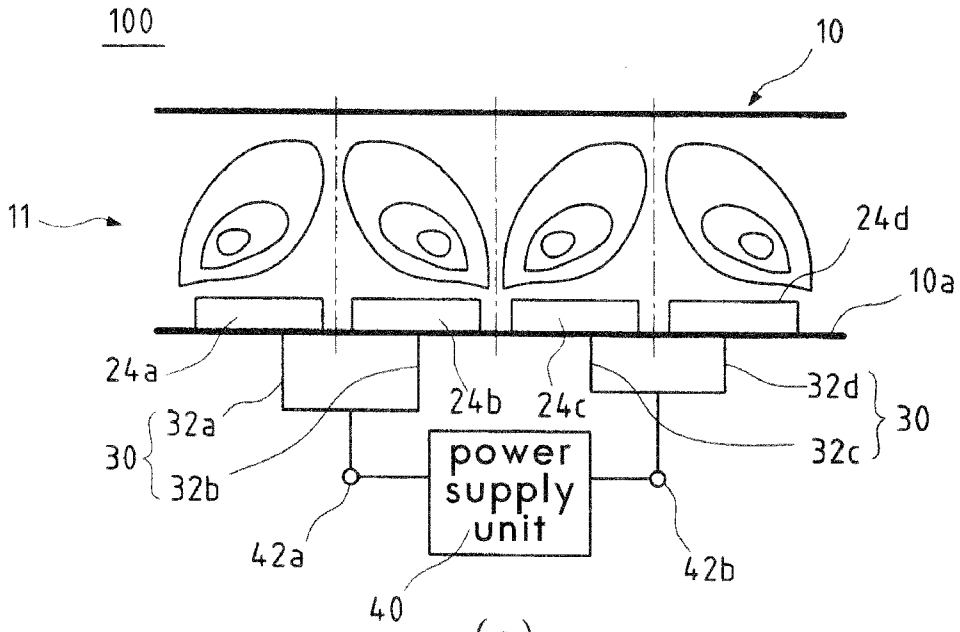
100
10
11
24d
10a
24a
32a
24b
24c
32d
30
30
32b
32c
power supply unit
42a
42b
40

(a)

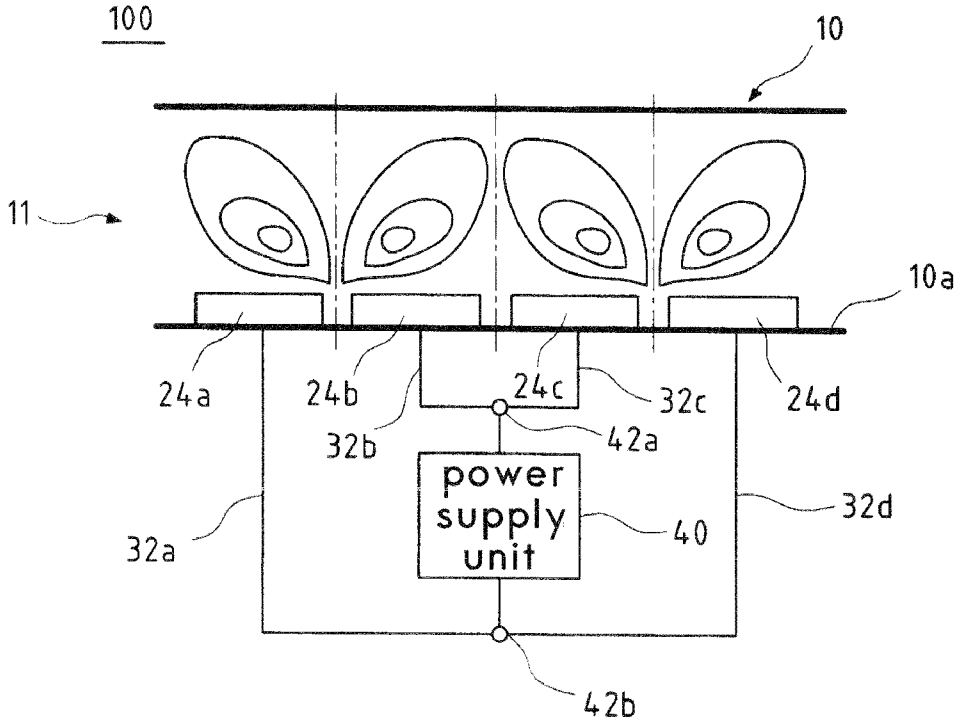
100
10
11
10a
24a
24b
24c
32c
24d
32b
42a
power supply unit
40
32d
32a
42b

(b)

MICROCHANNEL-TYPE FLUID MIXING APPARATUS USING AC ELECTROOSMOTIC FLOWS (AC-EOF) AND INCLINED-ELECTRODE PATTERNS

CROSS-REFERENCE TO RELATED APPLICATIONS

[0001] This application claims the benefit of Korean Patent Application No. 10-2010-0021994, filed on Mar. 11, 2010 in the Korean Intellectual Property Office, which is incorporated herein by reference in its entirety.

BACKGROUND OF THE INVENTION

[0002] (a) Field of the Invention

[0003] The present invention relates to a microchannel-type fluid mixing apparatus using AC electroosmotic flows (AC-EOF) and inclined-electrode patterns, and more particularly, to such a microchannel-type fluid mixing apparatus using AC electroosmotic flows (AC-EOF) and inclined-electrode patterns, in which AC power is supplied to a plurality of electrodes arranged inclinedly at a predetermined angle in a slash shape along a lengthwise direction of a microchannel on an inner bottom wall surface of the microchannel so that irregular fluctuations of the electromagnetic fields are induced on different electrodes disposed in a width direction of the microchannel, thereby improving a mixing efficiency of fluid materials.

[0004] (b) Background of the Related Art

[0005] Currently, the utilization of a microchannel is activated in biomaterial analysis or chemical material analysis along with the development of nano-technologies. Such a microchannel is generally used to convey fluid or mix fluid materials having different properties with each other.

[0006] One example of a technology related to a microchannel used to convey a fluid material or mix fluid materials having different properties is disclosed in Korean Patent Registration No. 10-0523282 entitled "MICROCHANNEL WITH A HELICAL ELECTROOSMOTIC FLOW". The microchannel with a helical electroos otic flow includes: a pair of horizontal electrodes respectively disposed at two opposite distal ends of a microchannel; a plurality of vertical electrodes disposed at the left and right sides of a bottom of the microchannel, respectively, in such a fashion as to be spaced apart from one another at predetermined intervals; an electrical circuit having a power supply and a ground respectively connected to the horizontal electrodes, the electrical circuit having a plurality of resistors respectively connected to the plurality of right and left side vertical electrodes through the power supply and the ground, whereby an electric field is formed in parallel with the microchannel through the horizontal electrodes and an electric field is formed in perpendicular to the microchannel through the vertical electrodes so as to induce a helical electroosmotic flow in fluid passing through the microchannel.

[0007] In addition, examples of a technology which is a prior application filed by the present inventor are disclosed in Korean Patent Registration No. 10-0758362 entitled "METHOD FOR ENHANCING THE MIXING EFFECT OF FLUID MATERIAL IN MICROCHANNEL" and Korean Patent Registration Nos. 10-0739023 and 10-0739025 entitled "ELECTRODE INSTALLATION STRUCTURE FOR ENHANCING THE MIXING EFFECT OF FLUID MATERIAL IN MICROCHANNEL". Korean Patent Registration No. 10-0758362 discloses a method for enhancing the mixing effect of a fluid material within a microchannel by installing electrodes on the microchannel, which includes: a first electrode and a second electrode formed on a bottom wall surface of the microchannel in a width direction perpendicular to a fluid conveyance direction, the first and second electrodes having different size and being spaced apart from each other; and a third electrode and a fourth electrode formed on a top wall surface of the microchannel in a width direction perpendicular to the fluid conveyance direction, the third and fourth electrodes having different size and being spaced apart from each other, whereby AC power is applied to the first to fourth electrodes so as to mix fluids flowing within the microchannel. Besides, Korean Patent Registration Nos. 10-0739023 and 10-0739025 disclose an electrode installation structure in which electrodes are installed on a microchannel so as to perform a mixing process of a fluid material in such a fashion that the electrodes are formed on a bottom wall surface of the microchannel, the electrodes each having an area which is gradually increased as advancing from one side to the other side.

[0008] Such conventional art technologies associated with the microchannel used to convey and mix fluid materials employ fluid electroosmosis. In the conventional art technologies, the construction and arrangement structure of the electrodes installed on a wall surface of the microchannel is modified so as to enhance the mixing effect of fluid materials flowing in the microchannel.

[0009] However, the conventional art technologies entail a problem in that since a plurality of electrodes is arranged in a specific pattern on a plurality of wall surfaces defining the microchannel or specifically patterned electrodes are arranged on the wall surfaces of the microchannel, many difficulties are caused in forming the electrodes on the microchannel.

[0010] Therefore, there is a need for the development of a technology that can enhance the mixing effect of fluid materials flowing in a microchannel while simplifying a structure in which electrodes are arranged on a microchannel.

SUMMARY OF THE INVENTION

[0011] Accordingly, the present invention has been made in an effort to develop such a new technology to solve the above-mentioned problems occurring in the prior art, and it is an object of the present invention to provide a novel microchannel-type fluid mixing apparatus using AC electroosmotic flows (AC-EOF) and inclined-electrode patterns, in which as AC power is supplied to a plurality of electrodes arranged inclinedly at a predetermined angle in a slash shape along a lengthwise direction of a microchannel on an inner bottom wall surface of the microchannel, the arrangement of different electrodes is induced in a width direction of the microchannel so that the electromagnetic fields are irregularly fluctuated in the width direction of the microchannel, thereby improving a mixing efficiency of different fluid materials flowing in the microchannel with the fluid flow divided into two partial flow paths along the width direction of the microchannel.

[0012] Specifically, an object of the present invention is to provide a novel microchannel-type fluid mixing apparatus using AC electroosmotic flows (AC-EOF) and inclined-electrode patterns, in which the application of AC power and the arrangement of electrodes are designed by calculating a characteristic value (i.e., frequency) of AC power and character-

istic values (i.e., inclined angle and width) of the electrodes for enhancing the mixing efficiency of fluid materials so as to maximize the mixing efficiency of fluid materials.

[0013] To achieve the above objects, in one aspect, the preset invention provides a microchannel-type fluid mixing apparatus using AC electroosmotic flows (AC-EOF) and inclined-electrode patterns to induce the mixing of fluid materials flowing in a microchannel, the apparatus including: a microchannel formed by bonding a PDMS channel to an ITO glass plate constituting a bottom wall surface, the microchannel having a flow passageway defined therein; an electrode module disposed on the ITO glass plate in the microchannel and consisting of a plurality of electrodes arranged inclinedly at a predetermined angle in a slash shape along a lengthwise direction of the microchannel; a power line module consisting of a plurality of power lines connected to the plurality of electrodes; and a power supply unit connected to the power line module for applying AC power to the electrode module.

[0014] Preferably, the power supply unit may apply AC power having a voltage ranging from 3.5V to 4V and a frequency ranging from 650 Hz to 750 Hz to the electrode module through the power line module, each of the electrodes constituting an electrode unit of the electrode module may have a width ranging from 175 μm to 225 μm, and each of the electrodes constituting the electrode unit may be arranged inclinedly at an angle ranging from 30° to 45° with respect to the lengthwise direction of the microchannel.

[0015] In the microchannel-type fluid mixing apparatus using AC electroosmotic flows (AC-EOF) and inclined-electrode patterns according to the present invention, the electrode module comprising a plurality of electrode units arranged spaced apart from one another, each electrode unit consisting of four electrodes spaced apart from one another, and the power line module comprising four power lines through which electrodes having the same sequential number in the respective electrode units are connected in parallel with one another. The microchannel-type fluid mixing apparatus may further include a controller for allowing two power lines selected from the four power lines constituting the power line module to be connected to one side terminal of the power supply unit, and simultaneously allowing the remaining two power lines selected from the four power lines to be connected to the other side terminal of the power supply unit such that two power lines respectively connected to the one side terminal and the other side terminal are selected alternately over time.

[0016] In the microchannel-type fluid mixing apparatus using AC electroosmotic flows (AC-EOF) and inclined-electrode patterns according to the present invention, the power line module may include a first power line, a second power line, a third power line and a fourth power line through which first electrodes, second electrodes, third electrodes and fourth electrodes are connected in parallel with one another, respectively, in the lengthwise direction of the microchannel in the respective electrode units constituting the electrode module. The controller may alternately perform a process of connecting the first power line and the second power line to the one side terminal of the power supply unit and simultaneously connecting the third power line and the fourth power line to the other side terminal of the power supply unit, and a subsequent process connecting the first power line and the fourth power line to the other side terminal of the power supply unit and simultaneously connecting the second power line and the third power line to the one side terminal of the power supply unit.

[0017] In the microchannel-type fluid mixing apparatus using AC electroosmotic flows (AC-EOF) and inclined-electrode patterns according to the present invention, the electrode module may be constructed in such a fashion that the four electrodes constituting the each electrode unit are arranged to have different widths along the lengthwise direction of the microchannel.

BRIEF DESCRIPTION OF THE DRAWINGS

[0018] The above and other objects, features and advantages of the present invention will be apparent from the following detailed description of the preferred embodiments of the invention in conjunction with the accompanying drawings, in which:

[0019] FIG. **1** is a side view illustrating a microchannel-type fluid mixing apparatus using AC electroosmotic flows (AC-EOF) and inclined-electrode patterns according to a preferred embodiment of the present invention;

[0020] FIG. **2** is a top plan view illustrating a microchannel-type fluid mixing apparatus using AC electroosmotic flows (AC-EOF) and inclined-electrode patterns according to a preferred embodiment of the present invention;

[0021] FIG. **3** is a top perspective view illustrating a microchannel and an electrode module constituting a microchannel-type fluid mixing apparatus using AC electroosmotic flows (AC-EOF) and inclined-electrode patterns according to a preferred embodiment of the present invention;

[0022] FIG. **4** is a photograph illustrating a "T"-shaped internal flow passageway of a microchannel used in an experiment detecting the mixing efficiency of fluid materials according to the width and inclined angle of electrodes constituting an electrode module of a microchannel-type fluid mixing apparatus according to a preferred embodiment of the present invention;

[0023] FIG. **5** is a photograph illustrating an internal flow passageway in which the inclined angle of the electrodes relative to a lengthwise direction of a microchannel is 30° and the width of the electrodes is 100 μm in an experiment detecting the mixing efficiency of fluid materials according to the width and inclined angle of electrodes constituting an electrode module of a microchannel-type fluid mixing apparatus according to a preferred embodiment of the present invention;

[0024] FIG. **6** is a photograph illustrating an internal flow passageway in which the inclined angle of the electrodes relative to a lengthwise direction of a microchannel is 45° and the width of the electrodes is 200 μm in an experiment detecting the mixing efficiency of fluid materials according to the width and inclined angle of electrodes constituting an electrode module of a microchannel-type fluid mixing apparatus according to a preferred embodiment of the present invention;

[0025] FIG. **7** is a photograph illustrating an internal flow passageway in which the inclined angle of the electrodes relative to a lengthwise direction of a microchannel is 60° and the width of the electrodes is 150 μm in an experiment detecting the mixing efficiency of fluid materials according to the width and inclined angle of electrodes constituting an electrode module of a microchannel-type fluid mixing apparatus according to a preferred embodiment of the present invention;

[0026] FIGS. **8** and **9** are photographs illustrating a state in which a mixture of particles and an electrolytic solution introduced into a microchannel through the other side inlet open-

ing of the internal flow passageway are mixed with an electrolytic solution introduced into the microchannel through one side inlet opening of the internal flow passageway by an irregular fluid flow while passing through the internal flow passageway of the microchannel wherein FIG. **8** is a photograph showing an internal flow passageway of the microchannel in which the electrodes each having an inclined angle of 30° and a width of 200 μm are installed, and FIG. **9** is a photograph showing an internal flow passageway of the microchannel in which the electrodes each having an inclined angle of 60° and a width of 100 μm are installed;

[0027] FIGS. **10** and **11** are photographs illustrating a state in which the particles of electrolytic solutions introduced into a microchannel are mixed over an entire range including an upper region and a lower region at a middle portion of the internal flow passageway of the microchannel wherein FIG. **10** is a photograph showing an internal flow passageway of the microchannel in which the electrodes each having an inclined angle of 30° and a width of 200 μm are installed, and FIG. **11** is a photograph showing an internal flow passageway of the microchannel in which the electrodes each having an inclined angle of 30° and a width of 100 μm are installed;

[0028] FIG. **12** is a graph illustrating the relationship between the mixing index of fluid materials and the inclined angle of the electrodes according to a change in the width of the electrodes at a vertical lower end portion of an internal flow passageway of the microchannel;

[0029] FIG. **13** is a graph illustrating the relationship between the mixing index of fluid materials and the inclined angle of the electrodes according to a change in the width of the electrodes at a vertical middle portion of an internal flow passageway of the microchannel;

[0030] FIG. **14** is a graph illustrating the relationship between the mixing index of fluid materials and the inclined angle of the electrodes according to a change in the width of the electrodes at a vertical upper end portion of an internal flow passageway of the microchannel;

[0031] FIG. **15** is a graph illustrating the relationship between the mixing index of fluid materials in a microchannel and the frequency of AC power applied to the electrodes according to a change in the vertical position of an internal flow passageway of the microchannel;

[0032] FIG. **16**(*a*) is a diagrammatic view illustrating a rotational flow, i.e., vortex of fluid materials created on respective electrodes when a first power line and a second power line is are connected to one side terminal of a power supply unit and a third power line and a fourth power line are connected to the other side terminal of the power supply unit in a microchannel-type fluid mixing apparatus using AC electroosmotic flows (AC-EOF) and inclined-electrode patterns according to the present invention; and

[0033] FIG. **16**(*b*) is a diagrammatic view illustrating a rotational flow, i.e., vortex of fluid materials created on respective electrodes when a first power line and a fourth power line is are connected to the other side terminal of a power supply unit and a second power line and a third power line are connected to one side terminal of the power supply unit in a microchannel-type fluid mixing apparatus using AC electroosmotic flows (AC-EOF) and inclined-electrode patterns according to the present invention.

DETAILED DESCRIPTION OF THE PREFERRED EMBODIMENT

[0034] A microchannel-type fluid mixing apparatus **100** using AC electroosmotic flows (AC-EOF) and inclined-electrode patterns according to the present invention is intended to induce the mixing of fluid materials flowing in a microchannel **10**. The microchannel-type fluid mixing apparatus **100** is characterized in that it includes a configuration in which AC power is supplied to a plurality of electrodes **24***a*, **24***b*, **24***c* and **24***d* arranged inclinedly at a predetermined angle in a slash shape along a lengthwise direction of a microchannel on an inner bottom wall surface of the microchannel, and in that the application of AC power and the arrangement of electrodes are designed by calculating a characteristic value (i.e., frequency) of AC power and characteristic values (i.e., inclined angle and width) of the electrodes for enhancing the mixing efficiency of fluid materials

[0035] In other words, the microchannel-type fluid mixing apparatus **100** according to the present invention is characterized in that the voltage and frequency of AC power applied to the electrodes **24***a*, **24***b*, **24***c* and **24***d*, the inclined angle of the electrodes **24***a*, **24***b*, **24***c* and **24***d* relative to a lengthwise direction of a microchannel **10**, and the width of the electrodes **24***a*, **24***b*, **24***c* and **24***d* are adjusted so as to maximize the mixing efficiency of fluid materials.

[0036] Accordingly, the mixing efficiency of fluid materials is enhanced.

[0037] That is, in the microchannel-type fluid mixing apparatus **100** using AC electroosmotic flows (AC-EOF) and inclined-electrode patterns according to the present invention, the electrodes are formed inclinedly so that the arrangement of different electrodes **24***a*, **24***b*, **24***c* and **24***d* is induced in a width direction of the microchannel **10** to cause an electromagnetic field to be fluctuated irregularly in the width direction of the microchannel **10**. In addition, in the microchannel-type fluid mixing apparatus **100** using AC electroosmotic flows (AC-EOF) and inclined-electrode patterns, different fluid materials flow in the microchannel with the fluid flow divided into two partial flow paths along the width direction of the microchannel **10** as shown in FIG. **4**.

[0038] Thus, different fluid materials flowing in the microchannel can be mixed easily and effectively by an electromagnetic field fluctuated irregularly in the width direction of the microchannel **10** so as to enhance the mixing efficiency of fluid materials.

[0039] Now, a preferred embodiment of the present invention will be described hereinafter in more detail with reference to FIGS. **1** to **16**. In the following description, elements having the same function are denoted by the same reference numerals. In the meantime, in the drawings and the detailed description, illustration and explanation on the construction and operation which a person skilled in the art can easily understand from the microchannel-type fluid mixing apparatus using AC electroosmotic flows (AC-EOF) and inclined-electrode patterns will be briefly made or will be omitted to avoid redundancy. In particular, in the drawings and the detailed description, illustration and explanation on the detailed technical construction and operation of elements, which have no direct electrical connection with the technical features of the present invention, will be omitted, and only the technical constructions directly related with the present invention will be briefly illustrated and explained.

[0040] FIG. **1** is a side view illustrating a microchannel-type fluid mixing apparatus using AC electroosmotic flows (AC-EOF) and inclined-electrode patterns according to a preferred embodiment of the present invention, FIG. **2** is a top plan view illustrating a microchannel-type fluid mixing apparatus using AC electroosmotic flows (AC-EOF) and inclined-

electrode patterns according to a preferred embodiment of the present invention, FIG. **3** is a top perspective view illustrating a microchannel and an electrode module constituting a microchannel-type fluid mixing apparatus using AC electroosmotic flows (AC-EOF) and inclined-electrode patterns according to a preferred embodiment of the present invention, FIG. **4** is a photograph illustrating a "T"-shaped internal flow passageway of a microchannel used in an experiment detecting the mixing efficiency of fluid materials according to the width and inclined angle of electrodes constituting an electrode module of a microchannel-type fluid mixing apparatus according to a preferred embodiment of the present invention, FIG. **5** is a photograph illustrating an internal flow passageway in which the inclined angle of the electrodes relative to a lengthwise direction of a microchannel is 30° and the width of the electrodes is 100 μm in an experiment detecting the mixing efficiency of fluid materials according to the width and inclined angle of electrodes constituting an electrode module of a microchannel-type fluid mixing apparatus according to a preferred embodiment of the present invention, FIG. **6** is a photograph illustrating an internal flow passageway in which the inclined angle of the electrodes relative to a lengthwise direction of a microchannel is 45° and the width of the electrodes is 200 μm in an experiment detecting the mixing efficiency of fluid materials according to the width and inclined angle of electrodes constituting an electrode module of a microchannel-type fluid mixing apparatus according to a preferred embodiment of the present invention, FIG. **7** is a photograph illustrating an internal flow passageway in which the inclined angle of the electrodes relative to a lengthwise direction of a microchannel is 60° and the width of the electrodes is 150 μm in an experiment detecting the mixing efficiency of fluid materials according to the width and inclined angle of electrodes constituting an electrode module of a microchannel-type fluid mixing apparatus according to a preferred embodiment of the present invention, FIGS. **8** and **9** are photographs illustrating a state in which a mixture of particles and an electrolytic solution introduced into a microchannel through the other side inlet opening of the internal flow passageway are mixed with an electrolytic solution introduced into the microchannel through one side inlet opening of the internal flow passageway by an irregular fluid flow while passing through the internal flow passageway of the microchannel wherein FIG. **8** is a photograph showing an internal flow passageway of the microchannel in which the electrodes each having an inclined angle of 30° and a width of 200 μm are installed and FIG. **9** is a photograph showing an internal flow passageway of the microchannel in which the electrodes each having an inclined angle of 60° and a width of 100 μm are installed, FIGS. **10** and **11** are photographs illustrating a state in which the particles of electrolytic solutions introduced into a microchannel are mixed over an entire range including an upper region and a lower region at a middle portion of the internal flow passageway of the microchannel wherein FIG. **10** is a photograph showing an internal flow passageway of the microchannel in which the electrodes each having an inclined angle of 30° and a width of 200 μm are installed and FIG. **11** is a photograph showing an internal flow passageway of the microchannel in which the electrodes each having an inclined angle of 30° and a width of 100 μm are installed, FIG. **12** is a graph illustrating the relationship between the mixing index of fluid materials and the inclined angle of the electrodes according to a change in the width of the electrodes at a vertical lower end portion of an internal flow passageway of the microchannel, FIG. **13** is a graph illustrating the relationship between the mixing index of fluid materials and the inclined angle of the electrodes according to a change in the width of the electrodes at a vertical middle portion of an internal flow passageway of the microchannel, FIG. **14** is a graph illustrating the relationship between the mixing index of fluid materials and the inclined angle of the electrodes according to a change in the width of the electrodes at a vertical upper end portion of an internal flow passageway of the microchannel, and FIG. **15** is a graph illustrating the relationship between the mixing index of fluid materials in a microchannel and the frequency of AC power applied to the electrodes according to a change in the vertical position of an internal flow passageway of the microchannel.

[0041] A microchannel-type fluid mixing apparatus **100** using AC electroosmotic flows (AC-EOF) and inclined-electrode patterns according to a preferred embodiment of the present invention includes a microchannel **10**, an electrode module **20**, a power line module **30**, a power supply unit **40** and a controller **50** as shown in FIG. **1**.

[0042] The microchannel **10** is a rectangular parallelepiped tube through which a flowing fluid material passes, and has a flow passageway **11** formed therein so that the fluid material introduced into the microchannel **10** flows through the flow passageway **11**. The microchannel **10** may include a construction in which an inlet section is formed in the shape of a branch tube so that fluid materials having different properties can be introduced into the internal flow passageway **11** with the fluid flow divided into two partial flow paths.

[0043] The microchannel **10** according to a preferred embodiment of the present invention is formed by bonding a PDMS channel **14** to an ITO (Indium Tin Oxide) glass plate **12** using a bonding device such as plasma generator. The ITO glass plate **12** constitutes a bottom wall surface **10***a* of the microchannel **10**, and the PDMS channel **14** constitutes the remaining walls of the microchannel **10**.

[0044] The electrode module **20** consists of a plurality of electrodes **24***a*, **24***b*, **24***c* and **24***d* formed on the ITO glass plate **12** in the microchannel **10**, i.e., the bottom wall surface **10***a* of the microchannel **10**. The electrodes **24***a*, **24***b*, **24***c* and **24** constituting the electrode module **20** is generally molded by formation of predetermined specific patterns through the irradiation of ultraviolet (UV) rays onto a surface of the ITO glass plate **12**. The electrode module **20** is connected to the power line module **30** so that it receives AC power from the power supply unit **40** to generate an electric field to induce to induce a rotational flow, i.e., vortex of fluid materials passing through the internal flow passageway **11** of the microchannel **10** in a vertical direction on the respective electrodes **24***a*, **24***b*, **24***c* and **24***d*

[0045] As shown in FIG. **2**, the electrode module **20** includes a plurality of electrodes **24***a*, **24***b*, **24***c* and **24***d* arranged spaced apart from one another along a lengthwise direction of the microchannel **10**. Particularly, the electrodes **24***a*, **24***b*, **24***c* and **24***d* constituting the electrode module **20** according to the present invention are arranged inclinedly at a predetermined angle in a slash shape along a lengthwise direction of the microchannel **10** on an inner bottom wall surface of the microchannel **10**.

[0046] Thus, the arrangement of the different electrodes **24***a*, **24***b*, **24***c* and **24***d* is induced in a width direction of the microchannel **10** over specific distance ranges of a lengthwise direction of the microchannel **10** so as to improve a mixing efficiency of different fluid materials flowing in the micro-

channel with the fluid flow divided into two partial flow paths along the width direction of the microchannel while an electromagnetic field is irregularly fluctuated in the width direction of the microchannel **10**.

[0047] Here, preferably, each of the electrodes **24***a*, **24***b*, **24***c* and **24***d* has a width ranging from 175 μm to 225 μm and an inclined angle ranging from 30° to 45° with respect to the lengthwise direction of the microchannel **10**.

[0048] The power line module **30** serves to allow the electrode module **20** to be connected to the power supply unit **40** so that the electrode module **20** receives AC power from the power supply unit **40**. Respective power lines **32***a*, **32***b*, **32***c* and **32***d* constituting the power line module **30** is connected to the respective electrodes **24***a*, **24***b*, **24***c* and **24***d* constituting the electrode module **20** and the respective terminals **42***a* and **42***b* of the power supply unit **40**.

[0049] The power supply unit **40** is connected to the power line module **30** so that AC power of a predetermined frequency is applied to the electrode module **20** through the power line module **30**.

[0050] Here, preferably, the power supply unit **40** applies AC power having a voltage ranging from 3.5V to 4V and a frequency ranging from 650 Hz to 750 Hz to the electrode module **20** through the power line module **30**. In particular, the power supply unit **40** applies AC power having a voltage of 4V and a frequency of 700 Hz to the electrode module **20** so as to enhance the mixing efficiency of fluid materials.

[0051] The microchannel-type fluid mixing apparatus **100** using AC electroosmotic flows (AC-EOF) and inclined-electrode patterns according to the present invention adjust the width and inclined angle of each of the electrodes **24***a*, **24***b*, **24***c* and **24***d* constituting the electrode module **20**, and the frequency of AC power to be from the power supply unit **40** as mentioned above so as to enhance the mixing efficiency of fluid materials.

[0052] That is, each of the electrodes **24***a*, **24***b*, **24***c* and **24***d* has a width ranging from 175 μm to 225 μm (preferably 200 μm) and an inclined angle ranging from 30° to 45° with respect to the lengthwise direction of the microchannel **10**. Also, AC power supplied from the power supply unit **40** has a voltage ranging from 3.5V to 4V and a frequency ranging from 650 Hz to 750 Hz. Thus, the mixing efficiency of fluid materials is improved.

[0053] Like this, the numerical values of the width and inclined angle of each of the electrodes **24***a*, **24***b*, **24***c* and **24***d*, and the frequency of AC power for enhancing the mixing efficiency of fluid materials are calculated by an experiment.

[0054] An experiment detecting the mixing efficiency of fluid materials according to the frequency of AC power supplied from the power supply unit **40** and the width and inclined angle of the electrodes will be described hereinafter in detail.

[0055] First, the internal flow passageway of the microchannel used in this experiment is formed in the shape of a "T"-shaped branch tube as shown in FIG. **4**. The internal flow passageway is defined in the microchannel **10** by bonding a frame made of a PDMS material to the ITO glass plate having the electrodes installed thereon. The internal flow passageway formed in the shape of a "T"-shaped branch tube includes one side inlet opening for introducing an electrolytic solution having a concentration of 0.1 mmol into the microchannel **10**, and the other side inlet opening for introducing a mixture of an electrolytic solution having a concentration of 0.1 mmol and particles used for identifying the flow of the fluid into the microchannel **10**.

[0056] The electrolytic solution passing through the internal flow passageway flows irregularly according to the operation of the microchannel-type fluid mixing apparatus **100** using AC electroosmotic flows (AC-EOF) and inclined-electrode patterns according to the present invention, so that the particles contained in the electrolytic solution introduced into the microchannel through the other side inlet opening of the internal flow passageway of the microchannel are mixed with the electrolytic solution introduced into the microchannel through one side inlet opening of the internal flow passageway.

[0057] In this embodiment, AC power applied to the electrodes formed in the internal flow passageway was set to have a voltage of 4V and a frequency of 700 Hz. The numerical values of AC power determined as mentioned above will be described in the last paragraph.

[0058] Also, the inclined angle of the electrodes relative to the lengthwise direction of the microchannel is set to 30°, 45° and 60°, the width of the electrodes is set to 100 μm, 150 μm and 200 μm so that an experiment was conducted for respective combinations of the inclined angle and the width of the electrodes. That is, the experiment was conducted for the electrodes in which the combinations of the inclined angle and the width are as follows: 30°-100 μm, 30°-150 μm, 30°-200 μm, 45°-100 μm, 45°-150 μm, 45°-200 μm, 60°-100 μm, 60°-150 μm and 60°-200 μm

[0059] In this case, the inclined angle and the width of the electrodes are set to have different values, but the experimental conditions except these values are set equally.

[0060] FIGS. **5** to **7** show photographs of the internal flow passageway in which the electrodes having different combinations of the inclined angle and the width are installed before conduction of an experiment detecting the mixing efficiency of fluid materials according to the width and inclined angle of the electrodes constituting the electrode module. FIG. **5** is a photograph illustrating an internal flow passageway in which the inclined angle of the electrodes relative to the lengthwise direction of a microchannel is 30° and the width of the electrodes is 100 μm, FIG. **6** is a photograph illustrating an internal flow passageway in which the inclined angle of the electrodes relative to the lengthwise direction of a microchannel is 45° and the width of the electrodes is 200 μm, and FIG. **7** is a photograph illustrating an internal flow passageway in which the inclined angle of the electrodes relative to a lengthwise direction of a microchannel is 60° and the width of the electrodes is 150 μm.

[0061] In addition, with regard to the internal flow passageway to which the electrodes having different combinations of the inclined angle and the width are applied, the flow of the electrolytic solution is identified using a laser for emitting light to the particles contained in the electrolytic solution after allowing the electrolytic solutions to be respectively introduced into the internal flow passageway through both inlet openings.

[0062] FIGS. **8** and **9** show photographs of a state in which a mixture of particles and an electrolytic solution introduced into a microchannel through the other side inlet opening of the internal flow passageway are mixed with an electrolytic solution introduced into the microchannel through one side inlet opening of the internal flow passageway by an irregular fluid flow while passing through the internal flow passageway of

the microchannel wherein FIG. **8** is a photograph showing an internal flow passageway of the microchannel in which the electrodes each having an inclined angle of 30° and a width of 200 μm are installed, and FIG. **9** is a photograph showing an internal flow passageway of the microchannel in which the electrodes each having an inclined angle of 60° and a width of 100 μm are installed.

[0063] It can be found from FIG. **8** that the particles contained in the electrolytic solution are well mixed with the electrolytic solution introduced into the microchannel through one side inlet opening of the internal flow passageway while passing through the internal flow passageway. On the contrary, it can be found from FIG. **9** that the particles contained in the electrolytic solution are mixed to some extent with the electrolytic solution introduced into the microchannel through one side inlet opening of the internal flow passageway while passing through the internal flow passageway, but there exists a region where the particles are well not mixed in the internal flow passageway.

[0064] A microscopic picture is taken of the internal flow passageway in order to observe the mixed state of the particles of the electrolytic solution in given points of the internal flow passageway in a state where the laser emits light to the particles of the electrolytic solution introduced into a microchannel through the other side inlet opening of the internal flow passageway. After the photographed microscopic picture is corrected to allow the particles in the microscopic picture to be clearly identified, the number of particles by each region of the internal flow passageway is detected. In this case, the internal flow passageway consists of an upper region where the electrolytic solution mixed with the particles flows and a lower region where only the electrolytic solution flows.

[0065] FIGS. **10** and **11** show photographs taken by a microscope of the internal flow passageway and corrected to observe a state in which the particles of electrolytic solutions introduced into a microchannel are mixed over an entire range including an upper region and a lower region at a middle portion of the internal flow passageway of the microchannel wherein FIG. **10** is a photograph showing an internal flow passageway of the microchannel in which the electrodes each having an inclined angle of 30° and a width of 200 μm are installed, and FIG. **11** is a photograph showing an internal flow passageway of the microchannel in which the electrodes each having an inclined angle of 30° and a width of 100 μm are installed;

[0066] The degrees of mixing between different fluid materials can be compared by using a mixing index.

[0067] Here, the mixing index of fluid materials can be defined by the following equation:

$$I(M)=I(U)-I(L)/I(U)+I(L)$$

[0068] where I(U) is the number of particles at an upper region, and I(L) is the number of particles at a lower region.

[0069] As the mixing efficiency increases, the mixing index approaches 0, and as the mixing efficiency decreases, the mixing index approaches 1. That is, the smaller the mixing index, the higher the mixing efficiency, vice versa.

[0070] FIGS. **12** and **14** are graphs showing a detection result of the mixing index of fluid materials for the above-mentioned nine possible combinations between the inclined angle and the width of the electrodes: 30°-100 μm, 30°-150 μm, 30°-200 μm, 45°-100 μm, 45°-150 μm, 45°-200 μm, 60°-100 m, 60°-150 μm and 60° -200 μm.

[0071] FIG. **12** is a graph illustrating the relationship between the mixing index of fluid materials and the inclined angle of the electrodes according to a change in the width of the electrodes at a vertical lower end portion of an internal flow passageway of the microchannel, FIG. **13** is a graph illustrating the relationship between the mixing index of fluid materials and the inclined angle of the electrodes according to a change in the width of the electrodes at a vertical middle portion of an internal flow passageway of the microchannel, and FIG. **14** is a graph illustrating the relationship between the mixing index of fluid materials and the inclined angle of the electrodes according to a change in the width of the electrodes at a vertical upper end portion of an internal flow passageway of the microchannel;

[0072] Here, an ordinate of each graph denotes the mixing index of fluid materials, and an abscissa of each graph denotes the inclined angle of the electrodes.

[0073] Also, a blue line of each graph is to show the mixing index of fluid materials when the width of the electrodes is 100 μm, a red line of each graphs is to show the mixing index of fluid materials when the width of the electrodes is 150 μm, a yellowish green line of each graphs is to show the mixing index of fluid materials when the width of the electrodes is 200 μm.

[0074] It can be found from the graphs of FIGS. **12** to **14** that the mixing index of fluid materials varies depending on the inclined angle and the width of the electrodes.

[0075] It can also be found that the mixing index of fluid materials varies depending on the lower end portion, the middle portion and the upper end portion in the vertical direction of the internal flow passageway. Particularly, in case of the vertical lower end portion of the internal flow passageway shown in FIG. **12**, it has been found that the mixing index is generally large. That is, it can be interpreted that since the vertical lower end portion of the internal flow passageway is a portion where the electrodes are installed, the particles of the electrolytic solution adhere to the electrode surfaces by a friction between the fluid and the electrode surfaces or the fluid doe not flow smoothly, leading to a remarkable decrease in the mixing efficiency of fluid materials.

[0076] Here, it can be found from the graphs of FIGS. **12** to **14** that when the width of the electrodes is 200 μm and the inclined angle of the electrodes ranges from 30° to 45° relative to the lengthwise direction of the microchannel, the mixing index of fluid materials is smaller and thus the mixing efficiency of fluid materials is higher.

[0077] Meanwhile, FIG. **15** is a graph illustrating the relationship between the mixing index of fluid materials in a microchannel and the frequency of AC power applied to the electrodes according to a change in the vertical position of an internal flow passageway of the microchannel.

[0078] The graphs of FIG. **15** shows an experimental result of the detection of the mixing efficiency of fluid materials according to a change in the frequency of AC power set to 300 Hz, 500 Hz, 700 Hz and 900 Hz, respectively, in a state where a voltage of AC power applied to the electrodes has been fixed. In this case, the values of the frequency of AC power applied from the power supply unit are set differently as mentioned above, but the experimental conditions except the frequency are set equally.

[0079] Here, an ordinate of the graph denotes the mixing index of fluid materials, and an abscissa of the graph denotes the frequency of AC power.

[0080] Also, a blue line of the graph is to show the mixing index of fluid materials at the vertical upper end portion of the internal flow passageway, a red line of the graphs is to show the mixing index of fluid materials at the vertical middle portion of the internal flow passageway, a yellowish green line of the graph is to show the mixing index of fluid materials at the vertical lower end portion of the internal flow passageway.

[0081] It can be found from the graph of FIG. **15** that when the frequency of AC power ranges from 650 Hz to 750 Hz, the mixing index of fluid materials is smaller and thus the mixing efficiency of fluid materials is higher.

[0082] In the meanwhile, as the voltage of AC power is higher, the mixing efficiency of fluid materials increases. But, since there frequently occurs the case where the electrodes are burnt when the voltage of AC power exceeds 4V, a voltage of less than 4V is preferably applied to the electrodes.

[0083] Thus, when en experiment is conducted which detects the mixing efficiency of fluid materials according to the width and inclined angle of the electrodes constituting the electrode module, AC power applied to the electrodes is set to have a voltage of 4V and a frequency of 700 Hz.

[0084] Meanwhile, the microchannel-type fluid mixing apparatus **100** using AC electroosmotic flows (AC-EOF) and inclined-electrode patterns according to a preferred embodiment of the present invention may be constructed in such a fashion that AC power is alternately applied to the electrodes as shown in FIG. **16**.

[0085] FIG. **16**(*a*) is a diagrammatic view illustrating a rotational flow, i.e., vortex of fluid materials created on respective electrodes when a first power line and a second power line is are connected to one side terminal of a power supply unit and a third power line and a fourth power line are connected to the other side terminal of the power supply unit in a microchannel-type fluid mixing apparatus using AC electroosmotic flows (AC-EOF) and inclined-electrode patterns according to the present invention, and FIG. **16**(*b*) is a diagrammatic view illustrating a rotational flow, i.e., vortex of fluid materials created on respective electrodes when a first power line and a fourth power line is are connected to the other side terminal of a power supply unit and a second power line and a third power line are connected to one side terminal of the power supply unit in a microchannel-type fluid mixing apparatus using AC electroosmotic flows (AC-EOF) and inclined-electrode patterns according to the present invention.

[0086] The electrode module **20** of the microchannel-type fluid mixing apparatus **100** using AC electroosmotic flows (AC-EOF) and inclined-electrode patterns according to a preferred embodiment of the present invention constructed in such a fashion as to alternately apply AC power consists of a plurality of electrode units **22** each including four electrodes **24***a*, **24***b*, **24***c* and **24***d* arranged spaced apart from one another.

[0087] Here, the electrode module **20** may be constructed such that the four electrodes **24***a*, **24***b*, **24***c* and **24***d* constituting each electrode unit **22** have different widths in the lengthwise direction of the microchannel **10**.

[0088] Besides, the power line module **30** of the microchannel-type fluid mixing apparatus **100** using AC electroosmotic flows (AC-EOF) and inclined-electrode patterns according to a preferred embodiment of the present invention as constructed in such a fashion as to alternately apply AC power includes four power lines **32***a*, **32***b*, **32***c* and **32***d* through which the respective electrodes **24***a*, **24***b*, **24***c* and **24***d* having the same sequential number in the respective electrode units constituting the electrode module **20** are connected in parallel with one another.

[0089] In other words, the power line module **30** includes a first power line **32***a* through which respective first electrodes **24***a* are connected in parallel with one another, a second power line **32***b* through which respective second electrodes **24***b* are connected in parallel with one another, a third power line **32***a* through which respective third electrodes **24***c* are connected in parallel with one another, a fourth power line **32***d* through which respective fourth electrodes **24***d* are connected in parallel with one another in the lengthwise direction of the microchannel **10** in the respective electrode units **22**.

[0090] Moreover, the microchannel-type fluid mixing apparatus **100** using AC electroosmotic flows (AC-EOF) and inclined-electrode patterns according to a preferred embodiment of the present invention as constructed in such a fashion as to alternately apply AC power includes a controller **50**. The controller **50** serves to control the electrical connection between the respective electrodes **24***a*, **24***b*, **24***c* and **24***d* constituting the electrode module **20** and the power supply unit **40**. That is, the controller **50** controls a pattern in which each of the power lines **32***a*, **32***b*, **32***c* and **32***d* of the power line module **30** connected to the respective electrodes **24***a*, **24***b*, **24***c* and **24***d* is connected to each of the terminals **42***a* and **42***b* of the power supply unit **40**.

[0091] To this end, the controller **50** allows two power lines selected from the four power lines **32***a*, **32***b*, **32***c* and **32***d* constituting the power line module **30** to be connected to one side terminal **42***a* of the power supply unit **40**, and simultaneously allows the remaining two power lines selected from the four power lines to be connected to the other side terminal **42***b* of the power supply unit **40**. Particularly, the controller **50** allows two power lines respectively connected to the one side terminal **42***a* and the other side terminal **42***b* of the power supply unit **40** to be selected alternately over time. Thus, the controller **50** controls the electrical connection between the electrodes and the power supply unit in such a fashion as to alternately perform two patterns in which AC power is applied to the respective electrodes **24***a*, **24***b*, **24***c* and **24***d* connected to the power lines **32***a*, **32***b*, **32***c* and **32***d*.

[0092] The controller **50** according to a preferred embodiment of the present invention alternately performs a process of allowing the first power line **32***a* and the second power line **32***b* to be connected to one side terminal **42***a* of power supply unit **40** and simultaneously allowing the third power line **32***c* and the fourth power line **32***d* to be connected to the other side terminal **42***b* of the power supply unit **40** as shown in FIG. **16**(*a*), and a subsequent process of allowing the first power line **32***a* and the fourth power line **32***d* to be connected to the other side terminal **42***b* of power supply unit **40** and simultaneously allowing the second power line **32***b* and the third power line **32***c* to be connected to one side terminal **42***a* of the power supply unit **40** as shown in FIG. **16**(*b*), so that it controls the electrical connection between the electrodes and the power supply unit in such a fashion as to alternately perform two patterns in which AC power is applied to the respective electrodes **24***a*, **24***b*, **24***c* and **24***d* connected to the power lines **32***a*, **32***b*, **32***c* and **32***d*.

[0093] In this manner, when two patterns are alternately performed which applies AC power to the respective electrodes **24***a*, **24***b*, **24***c* and **24***d*, the vertical rotational flow of fluid materials induced over the respective electrodes **24***a*,

24*b*, **24***c* and **24***d* is changed over time as shown FIGS. **16**(*a*) and **16**(*b*). That is, the fluid materials flow vortically in a vertical direction while changing their rotational direction over time so that the mixing of different fluid materials is induced.

[0094] In the microchannel-type fluid mixing apparatus **100** using AC electroosmotic flows (AC-EOF) and inclined-electrode patterns as constructed above, fluid materials passing through the internal flow passageway **11** of the microchannel **10** flow vortically while changing their flow direction over the electrodes **24***a*, **24***b*, **24***c* and **24***d* since two patterns in which AC power is applied to the electrodes are alternately performed over time, resulting in an increase in the mixing efficiency of the fluid materials of different properties passing through the internal flow passageway **11** of the microchannel **10**.

[0095] Furthermore, since the microchannel-type fluid mixing apparatus **100** using AC electroosmotic flows (AC-EOF) and inclined-electrode patterns of the present invention includes a simplified electrode arrangement structure in which the electrodes **24***a*, **24***b*, **24***c* and **24***d* are arranged spaced apart from one another in the lengthwise direction of the microchannel **10** on the inner bottom wall surface **10***a* of the microchannel **10**, the manufacture of the microchannel **10** can also be easily carried out.

[0096] As described above, the microchannel-type fluid mixing apparatus using AC electroosmotic flows (AC-EOF) and inclined-electrode patterns has advantageous effects in that a plurality of electrodes is arranged inclinedly at a predetermined angle in a slash shape along a lengthwise direction of a microchannel on an inner bottom wall surface of the microchannel so as to induce the arrangement of different electrodes in a width direction of the microchannel so that the electromagnetic fields are irregularly fluctuated in the width direction of the microchannel, thereby improving a mixing efficiency of different fluid materials flowing in the microchannel with the fluid flow divided into two partial flow paths along the width direction of the microchannel.

[0097] In addition, the electrical connection between the respective electrodes and the power supply unit adapted to supply AC power to the electrodes is controlled by the controller so that fluid materials vortically flow in a vertical direction over the respective electrodes while changing their rotational direction over time, leading to a smooth mixing of the fluid materials.

[0098] Further, the microchannel-type fluid mixing apparatus **100** using AC electroosmotic flows (AC-EOF) and inclined-electrode patterns of the present invention has an advantageous effect in that it enhances the mixing efficiency of fluid materials while employing a simplified electrode arrangement structure.

[0099] While the microchannel-type fluid mixing apparatus using AC electroosmotic flows (AC-EOF) and inclined-electrode pattern according to the preferred embodiments of the present invention has been described and illustrated in electrical connection with specific exemplary embodiments with reference to the accompanying drawings, it will be readily appreciated by those skilled in the art that it is merely illustrative of the preferred embodiments of the present invention and various modifications and changes can be made thereto within the technical spirit and scope of the present invention.

What is claimed is:

1. A microchannel-type fluid mixing apparatus using AC electroosmotic flows (AC-EOF) and inclined-electrode patterns to induce the mixing of fluid materials flowing in a microchannel, the apparatus comprising:

a microchannel formed by bonding a PDMS channel to an ITO glass plate constituting a bottom wall surface, the microchannel having a flow passageway defined therein;

an electrode module disposed on the ITO glass plate in the microchannel and consisting of a plurality of electrodes arranged inclinedly at a predetermined angle in a slash shape along a lengthwise direction of the microchannel;

a power line module consisting of a plurality of power lines connected to the plurality of electrodes; and

a power supply unit connected to the power line module for applying AC power to the electrode module.

2. The microchannel-type fluid mixing apparatus according to claim **1**, wherein the power supply unit applies AC power having a voltage ranging from 3.5V to 4V and a frequency ranging from 650 Hz to 750 Hz to the electrode module through the power line module.

3. The microchannel-type fluid mixing apparatus according to claim **1**, wherein each of the electrodes constituting an electrode unit of the electrode module has a width ranging from 175 μm to 225 μm.

4. The microchannel-type fluid mixing apparatus according to claim **1**, wherein each of the electrodes constituting the electrode unit is arranged inclinedly at an angle ranging from 30° to 45° with respect to the lengthwise direction of the microchannel.

5. The microchannel-type fluid mixing apparatus according to claim **4**,

wherein the electrode module comprising a plurality of electrode units arranged spaced apart from one another, each electrode unit consisting of four electrodes spaced apart from one another,

wherein the power line module comprising four power lines through which electrodes having the same sequential number in the respective electrode units are connected in parallel with one another, and

wherein the microchannel-type fluid mixing apparatus further comprises a controller for allowing two power lines selected from the four power lines constituting the power line module to be connected to one side terminal of the power supply unit, and simultaneously allowing the remaining two power lines selected from the four power lines to be connected to the other side terminal of the power supply unit such that two power lines respectively connected to the one side terminal and the other side terminal are selected alternately over time

6. The microchannel-type fluid mixing apparatus according to claim **3**,

wherein the electrode module comprising a plurality of electrode units arranged spaced apart from one another, each electrode unit consisting of four electrodes spaced apart from one another,

wherein the power line module comprising four power lines through which electrodes having the same sequential number in the respective electrode units are connected in parallel with one another, and

wherein the microchannel-type fluid mixing apparatus further comprises a controller for allowing two power lines selected from the four power lines constituting the power line module to be connected to one side terminal

of the power supply unit, and simultaneously allowing the remaining two power lines selected from the four power lines to be connected to the other side terminal of the power supply unit such that two power lines respectively connected to the one side terminal and the other side terminal are selected alternately over time

7. The microchannel-type fluid mixing apparatus according to claim **2**,

wherein the electrode module comprising a plurality of electrode units arranged spaced apart from one another, each electrode unit consisting of four electrodes spaced apart from one another,

wherein the power line module comprising four power lines through which electrodes having the same sequential number in the respective electrode units are connected in parallel with one another, and

wherein the microchannel-type fluid mixing apparatus further comprises a controller for allowing two power lines selected from the four power lines constituting the power line module to be connected to one side terminal of the power supply unit, and simultaneously allowing the remaining two power lines selected from the four power lines to be connected to the other side terminal of the power supply unit such that two power lines respectively connected to the one side terminal and the other side terminal are selected alternately over time

8. The microchannel-type fluid mixing apparatus according to claim **1**,

wherein the electrode module comprising a plurality of electrode units arranged spaced apart from one another, each electrode unit consisting of four electrodes spaced apart from one another,

wherein the power line module comprising four power lines through which electrodes having the same sequential number in the respective electrode units are connected in parallel with one another, and

wherein the microchannel-type fluid mixing apparatus further comprises a controller for allowing two power lines selected from the four power lines constituting the power line module to be connected to one side terminal of the power supply unit, and simultaneously allowing the remaining two power lines selected from the four power lines to be connected to the other side terminal of the power supply unit such that two power lines respectively connected to the one side terminal and the other side terminal are selected alternately over time

9. The microchannel-type fluid mixing apparatus according to claim **8**,

wherein the power line module comprises a first power line, a second power line, a third power line and a fourth power line through which first electrodes, second electrodes, third electrodes and fourth electrodes are connected in parallel with one another, respectively, in the lengthwise direction of the microchannel in the respective electrode units constituting the electrode module, and

wherein the controller alternately performs a process of connecting the first power line and the second power line to the one side terminal of the power supply unit and simultaneously connecting the third power line and the fourth power line to the other side terminal of the power supply unit, and a subsequent process connecting the first power line and the fourth power line to the other side terminal of the power supply unit and simultaneously connecting the second power line and the third power line to the one side terminal of the power supply unit.

10. The microchannel-type fluid mixing apparatus according to claim **8**, wherein the electrode module is constructed in such a fashion that the four electrodes constituting the each electrode unit are arranged to have different widths along the lengthwise direction of the microchannel.

11. The microchannel-type fluid mixing apparatus according to claim **7**,

wherein the power line module comprises a first power line, a second power line, a third power line and a fourth power line through which first electrodes, second electrodes, third electrodes and fourth electrodes are connected in parallel with one another, respectively, in the lengthwise direction of the microchannel in the respective electrode units constituting the electrode module, and

wherein the controller alternately performs a process of connecting the first power line and the second power line to the one side terminal of the power supply unit and simultaneously connecting the third power line and the fourth power line to the other side terminal of the power supply unit, and a subsequent process connecting the first power line and the fourth power line to the other side terminal of the power supply unit and simultaneously connecting the second power line and the third power line to the one side terminal of the power supply unit.

12. The microchannel-type fluid mixing apparatus according to claim **7**, wherein the electrode module is constructed in such a fashion that the four electrodes constituting the each electrode unit are arranged to have different widths along the lengthwise direction of the microchannel.

13. The microchannel-type fluid mixing apparatus according to claim **6**,

wherein the power line module comprises a first power line, a second power line, a third power line and a fourth power line through which first electrodes, second electrodes, third electrodes and fourth electrodes are connected in parallel with one another, respectively, in the lengthwise direction of the microchannel in the respective electrode units constituting the electrode module, and

wherein the controller alternately performs a process of connecting the first power line and the second power line to the one side terminal of the power supply unit and simultaneously connecting the third power line and the fourth power line to the other side terminal of the power supply unit, and a subsequent process connecting the first power line and the fourth power line to the other side terminal of the power supply unit and simultaneously connecting the second power line and the third power line to the one side terminal of the power supply unit.

14. The microchannel-type fluid mixing apparatus according to claim **6**, wherein the electrode module is constructed in such a fashion that the four electrodes constituting the each electrode unit are arranged to have different widths along the lengthwise direction of the microchannel.

15. The microchannel-type fluid mixing apparatus according to claim **5**,

wherein the power line module comprises a first power line, a second power line, a third power line and a fourth power line through which first electrodes, second electrodes, third electrodes and fourth electrodes are connected in parallel with one another, respectively, in the

lengthwise direction of the microchannel in the respective electrode units constituting the electrode module, and

wherein the controller alternately performs a process of connecting the first power line and the second power line to the one side terminal of the power supply unit and simultaneously connecting the third power line and the fourth power line to the other side terminal of the power supply unit, and a subsequent process connecting the first power line and the fourth power line to the other side terminal of the power supply unit and simultaneously connecting the second power line and the third power line to the one side terminal of the power supply unit.

16. The microchannel-type fluid mixing apparatus according to claim **5**, wherein the electrode module is constructed in such a fashion that the four electrodes constituting the each electrode unit are arranged to have different widths along the lengthwise direction of the microchannel.

* * * * *