US 20160045790A1

(19) **United States**

(12) **Patent Application Publication**

Pacinella

(10) **Pub. No.: US 2016/0045790 A1**

(43) **Pub. Date: Feb. 18, 2016**

(54) **SMASH GOLF RACQUET**

(71) Applicant: **Daril Pacinella**, Rockledge, FL (US)

(72) Inventor: **Daril Pacinella**, Rockledge, FL (US)

(21) Appl. No.: **14/825,789**

(22) Filed: **Aug. 13, 2015**

Related U.S. Application Data

(60) Provisional application No. 62/036,918, filed on Aug. 13, 2014.

Publication Classification

(51) **Int. Cl.**

A63B 49/08	(2006.01)
A63B 60/28	(2006.01)
A63B 53/04	(2006.01)

(52) **U.S. Cl.**

CPC ***A63B 49/08*** (2013.01); ***A63B 53/0487*** (2013.01); ***A63B 60/28*** (2015.10); *A63B 2060/0085* (2015.10)

(57) **ABSTRACT**

A smash golf racquet comprises a frame having a handle proximate end and a bowed distal end that forms a rim with tensioned ball striking strings strung within and attached to the rim. A shaft is attached at a first end to the distal end of the handle and attached to a second end at a golf club head.

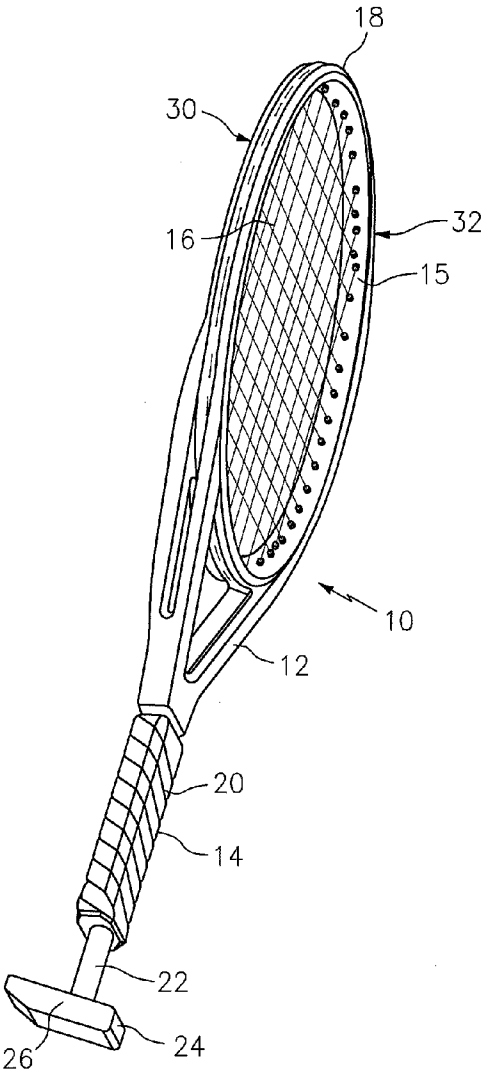

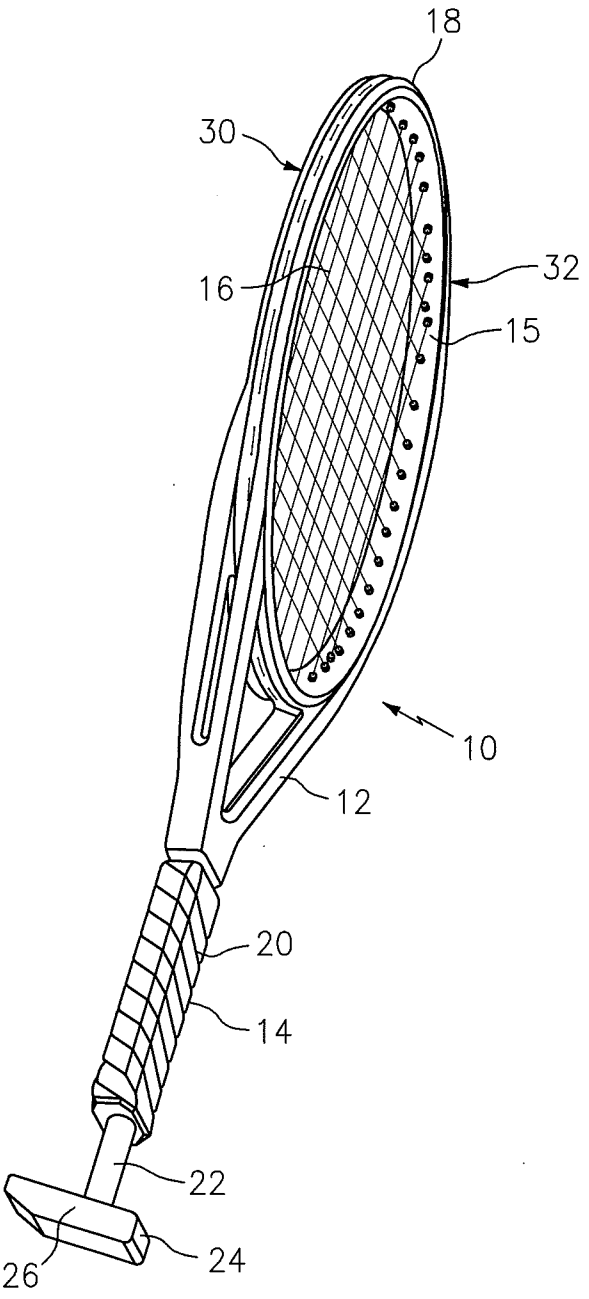

FIG. 1

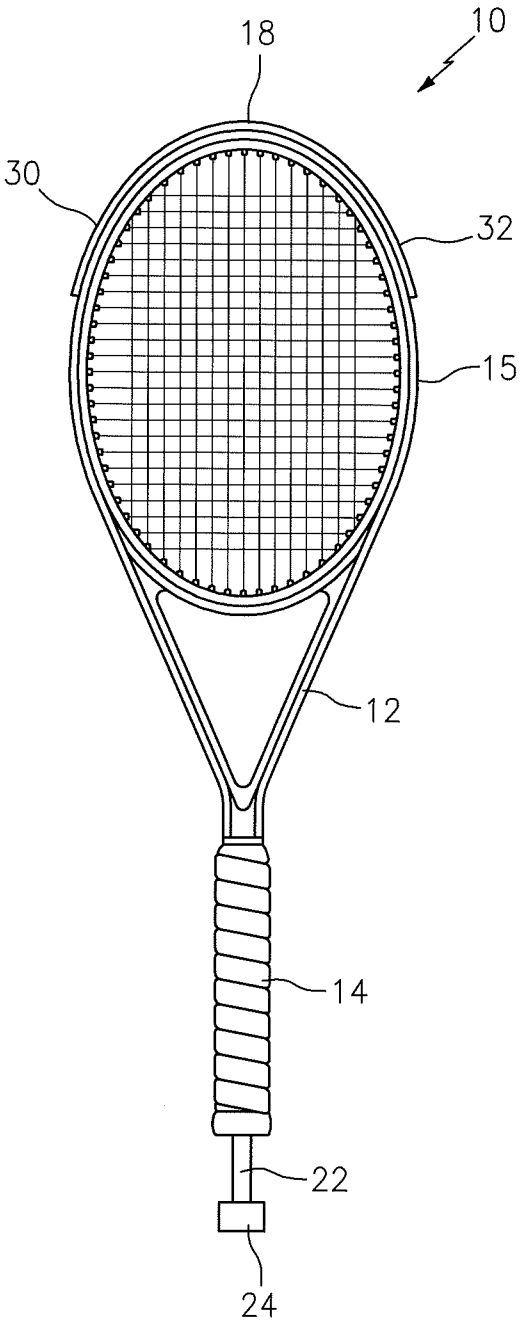

FIG. 2

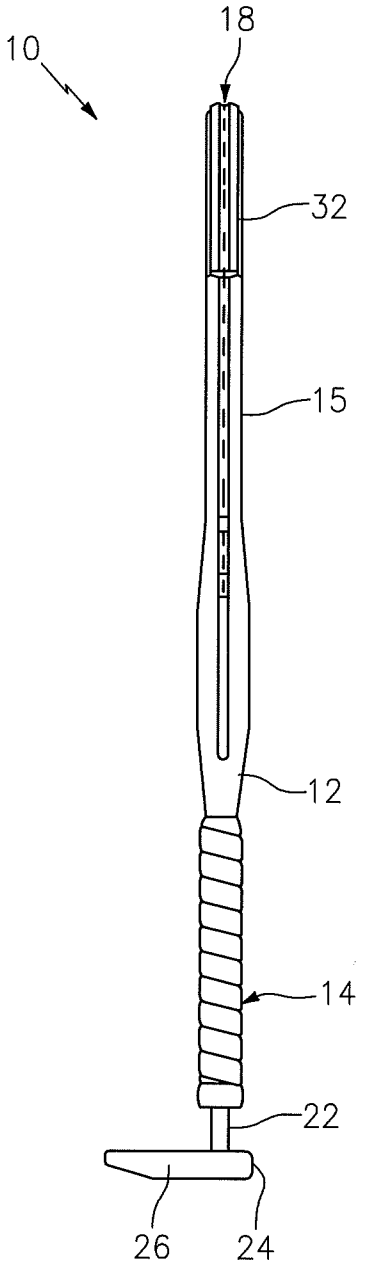

FIG. 3

SMASH GOLF RACQUET

CROSS REFERENCE TO RELATED APPLICATION

[0001] This application claims the benefit of U.S. Provisional Application Ser. No. 62/036,918, filed Aug. 13, 2014, the contents of which are incorporated herein by reference.

FIELD OF TECHNOLOGY

[0002] The present disclosure relates to the field of racquet sports, and in particular to a hybrid racquet that includes a golf club head affixed thereto.

RELATED ART

[0003] The number of active golfers has been decreasing for several years now. On April 18, 2014 the New York Times (NYT) published an article entitled "*In a Hole, Golf Considers Digging a Wider One*". See http://www.nytimes.com/2014/04/19/sports/golf/in-a-hole-golf-considers-digging-a-wider-one.html?_r=0

[0004] This NYT article reports that golf has lost five million players in the last decade, according to the National Golf Foundation, with 20 percent of the existing 25 million golfers apt to quit in the next few years. The article further reports that people under 35 have especially spurned the game, saying it takes too long to play, is too difficult to learn and has too many tiresome rules. As a result, golf course operators are considering various different ways to create a slightly different version of the game of golf that people can play on golf courses as an alternative to the traditional game of golf.

[0005] One alternative version is to simply increase the size of the golf holes, for example to a 15-inch diameter. As reported in the NYT article, the larger cup may be used by golfers using a conventional golf ball and clubs, and even players playing soccer golf. However, a problem with this version is that it requires the placement of a second hole on the putting green, which is significantly bigger and inconsistent with the hole used by conventional golfers. A problem with soccer golf, also referred to as foot golf, is people taking divots out of green with their feet when shooting for the foot golf pin, which greatly troubles traditional golfers. See for example the article dated Aug. 11, 2014 entitled *"Red card! FootGolfers May Need a Golf Course Etiquette Lesson*" at http ://www.golfadvisor.com/articles/footgolf-golf-course-etiquette-14696.htm.

[0006] There is a need for a piece of sports equipment that allows a non-golfer to utilize a golf course.

SUMMARY OF THE INVENTION

[0007] A smash golf racquet comprises a frame having a handle proximate end and a bowed distal end that forms a rim with tensioned ball striking strings strung within and attached to the rim. A shaft is attached at a first end to the distal end of the handle and attached to a second end at a golf club head.

[0008] A smash golf racquet comprises a frame having a handle proximate end and a bowed distal end that forms a rim with tensioned ball striking strings strung within and attached to the rim. A golf club head is attached to the handle.

[0009] The shaft may be telescope and/or may be removable and replaceable with respect to the handle.

[0010] These and other objects, features and advantages of the invention will become apparent in light of the detailed description of the embodiment thereof, as illustrated in the accompanying drawings.

DESCRIPTION OF THE DRAWINGS

[0011] The foregoing and other features of embodiments will become more apparent from the following detailed description of embodiments when read in conjunction with the accompanying drawings. In the drawings, like or identical reference numerals refer to like or identical elements.

[0012] FIG. **1** is a perspective view of a smash golf racquet;

[0013] FIG. **2** is a front view of the smash golf racquet of FIG. **1**; and

[0014] FIG. **3** is a side view of the smash golf racquet of FIGS. **1** and **2**.

DETAILED DESCRIPTION OF THE INVENTION

[0015] FIG. **1** is a perspective view of a smash golf racquet **10**. The racquet includes a frame **12** having a handle **14** and a rim **15** that includes a bowed section **18**. Ball-striking strings **16** are strung within the rim periphery and attached to the rim **15** of the frame. The rim is that portion of the racquet adapted to support the ball-striking strings **16**. The supported strings form a tensioned string grid for striking a ball. The strings may be synthetic (e.g., nylon), and may be made of synthetic threads spun together to produce a string that is strong yet flexible. These strings are very elastic so they deform when contacting a ball but quickly resume their normal length. This transfers energy to the ball, causing the ball to spring off the racquet face. The characteristics of the strings and how they are strung may be adjusted based upon the desired racquet characteristics.

[0016] In one embodiment the handle, the ball-striking strings and the rim may be configured and arranged as a conventional tennis racquet. At the handle **14**, a grip **20** is preferably formed as a spiral wound member, generally of leather or elastomer with similar characteristics, to insure preferred gripability of the racquet by a player. The grip is generally of a softer material than the frame for comfort of the player.

[0017] A shaft **22** extends from the handle **14**, and at a distal end of the shaft **22** a golf club head **24** is attached. The golf club head may be any golf club head shape, but in a preferred embodiment the head is configured as a putter head, as shown in FIG. **1**. The putter head **24** includes a face surface **26** for striking a ball (not shown). The shaft **22** may be a fixed length (e.g., several inches long) or adjustable length (e.g., telescopically adjustable). The shaft **22** may also be removable and replaceable with respect to the handle **14**. For example, the handle may include a central bore that receives a length of the shaft. It is contemplated that various configurations of the bore and the shaft may be used to provide the removable and replaceable shaft. For example, the shaft may be held within the bore with sufficient magnetic and/or frictional forces for use, but the shaft may be removed by the user from bore without the need for any hand tools. This would allow the user to use the racquet for tennis, without the shaft **22** being attached to the handle **14**, thus providing for a dual sport racquet.

[0018] In one embodiment the bore within the handle may include a metallic receiver with a hexagonal cross section mounted within the bore. The metallic receiver may be mag-

netized to cooperate with the shaft, which is also preferably cooperatively magnetized with respect to the metallic receiver. The shaft may include a stub portion (e.g., about one inch long) at its distal end having a hexagonal cross section sized to securely fit within the metallic receiver. The cross section of the metallic receiver and the stub portion may be other hexagonal. A person of ordinary skill will immediately appreciate after reading this disclosure that numerous other techniques may be used to removably and replaceably secure the shaft to the handle.

[0019] FIG. **2** is a front view of the smash golf racquet **10** of FIG. **1**. FIG. **3** is a side view of the smash golf racquet of FIGS. **1** and **2**.

[0020] To use the racquet **10** on a golf course a player/user would strike a ball with the ball-striking strings **16** towards golf hole. The ball may be for example a ball conventionally used to play one of racquetball, squash, tennis or any other small rubber ball, such as for example a SUPER•BALL® ball sold by Wham-O (www.wham-o.com). A conventional golf ball may also be used. It is contemplated that virtually any reasonably sized ball may be used, and the type of ball may be selected for example based upon the distance(s) of the hole(s) being played. For example, if played indoors then it is contemplated that a ball such as a ping pong ball or a WHIFFLE® ball may be used (www.whiffle.com).

[0021] The distance the ball is struck via the ball-striking strings **16** may be controlled by the speed of the strings hitting the ball and the angle of the plane of the ball-striking strings. The player may release the ball from their left hand and swing the racquet with their right hand at the desired speed and angle based upon the trajectory desired for the ball. The player continues to strike the ball the number of times necessary for the ball to reach a putting surface (i.e., a green). Once on the putting surface, the player would turn the racquet upside down and hold the racquet generally at hand positions **30**, **32**, address the resting ball on the putting surface with the putter face **26**. Synthetic or similar gripping surfaces may be applied to the exterior of the rim at hand positions **30**, **32** so the user knows where to place their hands and for enhanced feel. The player would then swing the racquet so the putter face strikes the ball, rolling it along the putting surface towards the hole. Once the player knocks the ball into the hole/cup on the green with the putter face **26**, she removes the ball from the cup and proceeds to the next hole. The use of the racquet on the course may be referred to as smash golf.

[0022] Smash golf has a number of advantages including the fact that did does not require any modification to a conventional golf course, it requires only a single smash golf club making it an easy walk on the golf course, and can be played relatively quickly.

[0023] It is contemplated that the shape of the smash golf racquet is not limited to tennis racquets; it is contemplated that various other racquets including squash or racquet ball racquets may be used. In addition, the frame, the shaft and the putter head may be formed as a unitary structure, such as for example or carbon fiber-reinforced polymer.

[0024] Although the invention has been illustrated and described with respect to several preferred embodiments thereof, various changes, omissions and additions to the form and detail thereof, may be made therein, without departing from the spirit and scope of the invention.

What is claimed is:

1. A smash golf racquet, comprising:

a frame having a handle proximate end and a bowed distal end that forms a rim with tensioned ball striking strings strung within and attached to the rim; and

a shaft attached at a first end to the distal end of the handle and attached to a second end at a golf club head.

2. A smash golf racquet, comprising:

a frame having a handle proximate end and a bowed distal end that forms a rim with tensioned ball striking strings strung within and attached to the rim; and

a golf club head attached to the handle.

3. The smash golf racquet of claim **2**, where the golf club head comprises a putter head.

4. The smash golf racquet of claim **3**, where the distal end of the handle is attached to the putter head.

5. The smash golf racquet of claim **3**, where the distal end of the handle is attached to the putter head via a shaft.

6. The smash golf racquet of claim **1**, where the shaft is removable and replaceable with respect to the handle independent of a hand tool.

7. The smash golf racquet of claim **3**, where the shaft comprises a telescopic shaft member.

* * * * *