July 5, 1927. 1,634,482

F. S. YOUTSEY

CASTING METHOD AND APPARATUS

Original Filed Feb. 26, 1919 3 Sheets-Sheet 1

Fig. 1.

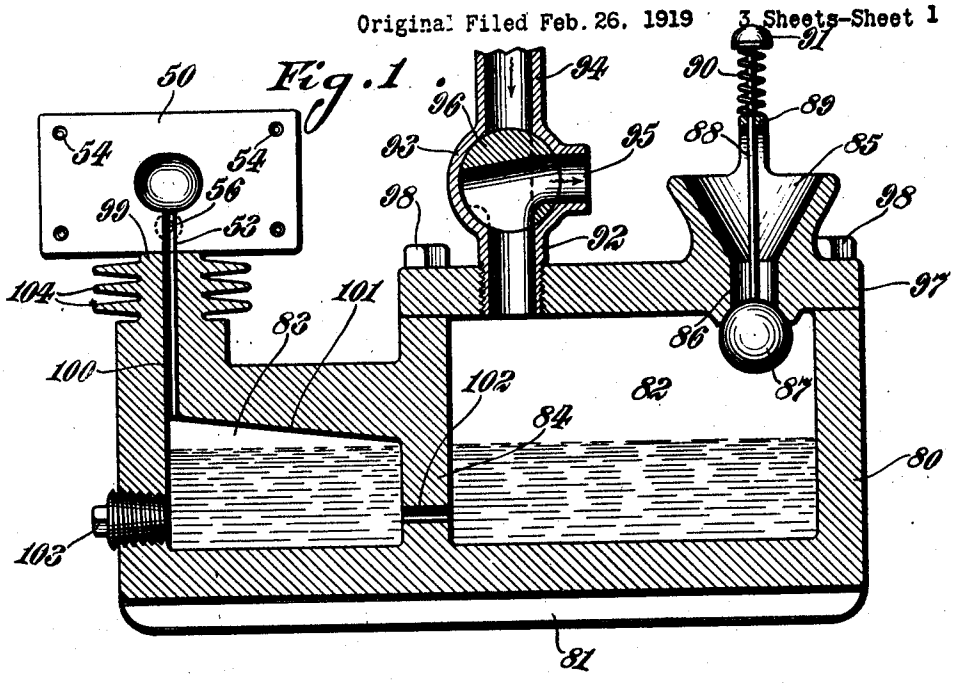

Fig. 2.

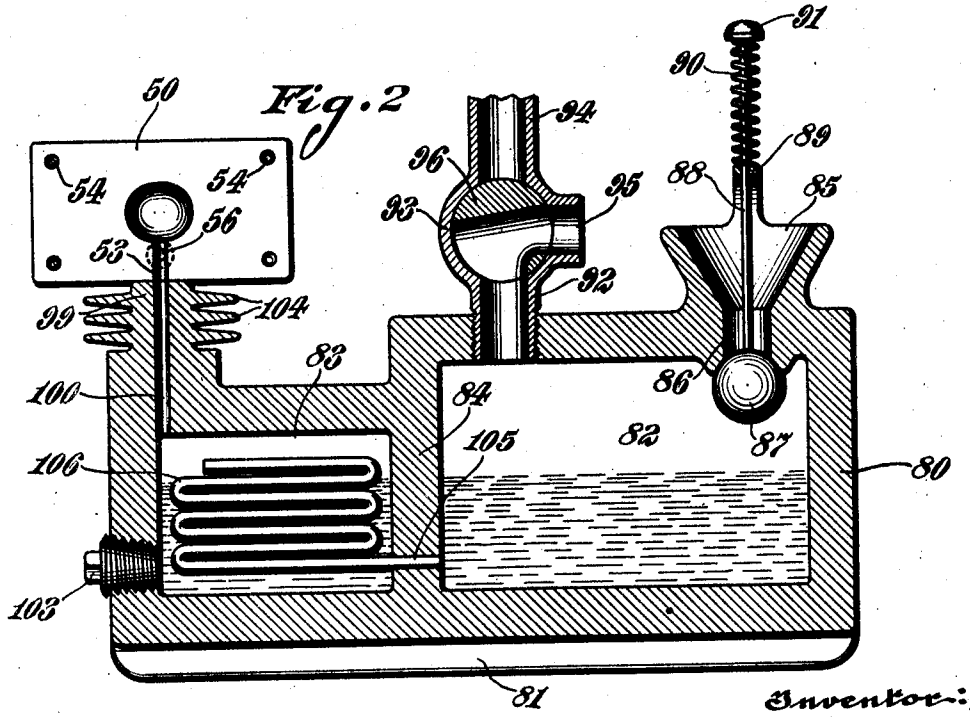

Inventor:
FLOYD S. YOUTSEY,
By John H. Bruninga
His Attorney.

July 5, 1927. 1,634,482

F. S. YOUTSEY

CASTING METHOD AND APPARATUS

Original Filed Feb. 26, 1919 3 Sheets-Sheet 2

Fig. 3

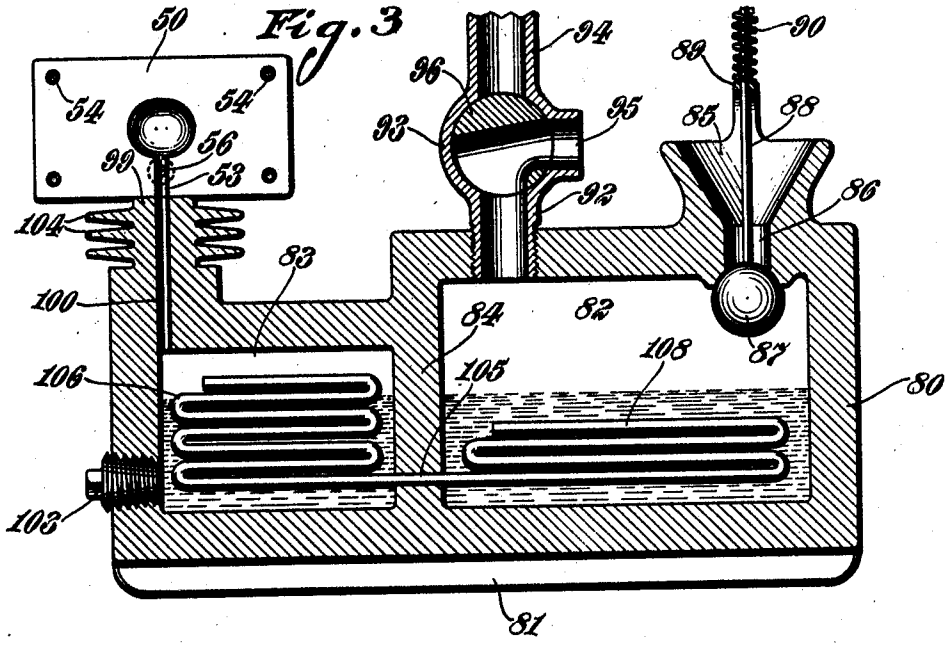

Fig. 4

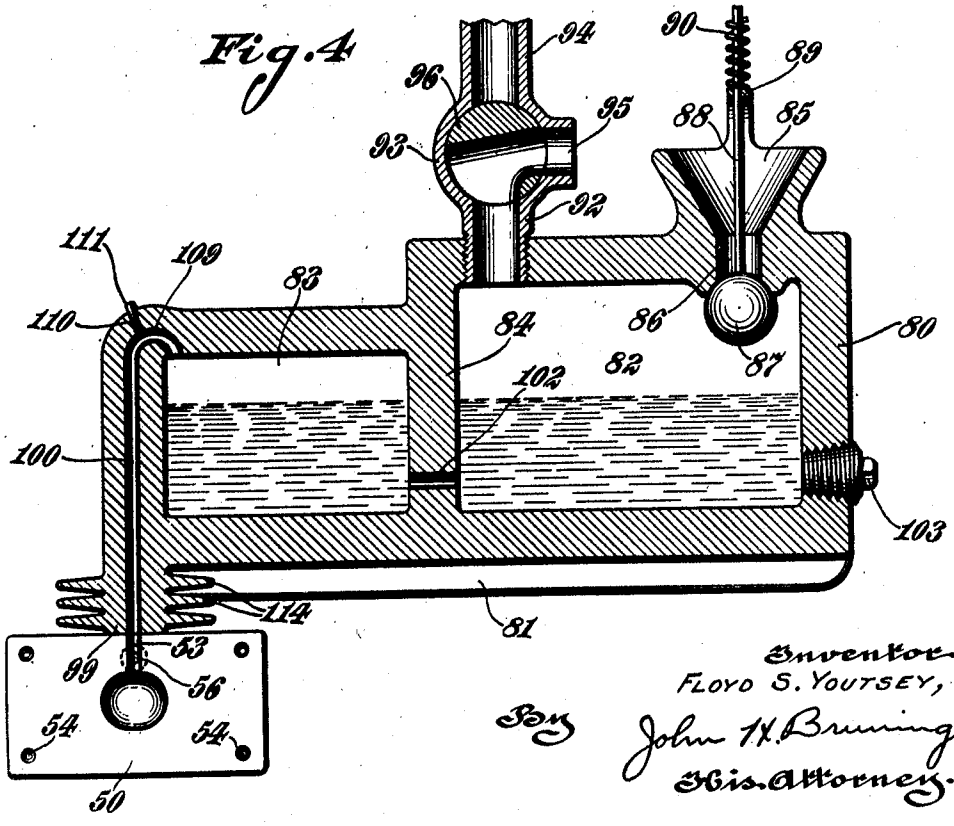

Inventor:
FLOYD S. YOUTSEY,
By John W. Bruninga
His Attorney.

July 5, 1927. 1,634,482

F. S. YOUTSEY

CASTING METHOD AND APPARATUS

Original Filed Feb. 26, 1919 3 Sheets-Sheet 3

Fig. 5

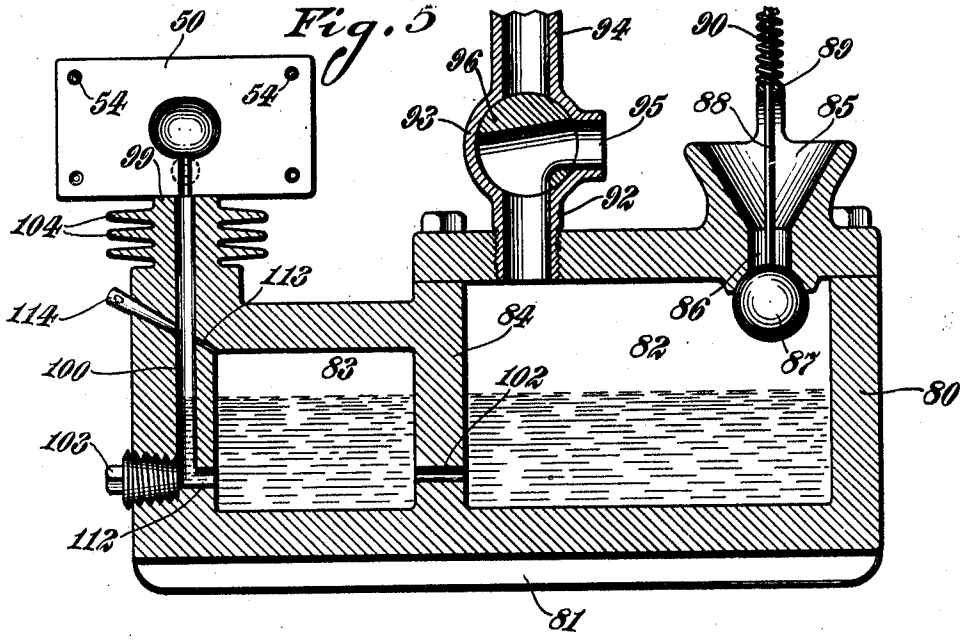

Fig. 6

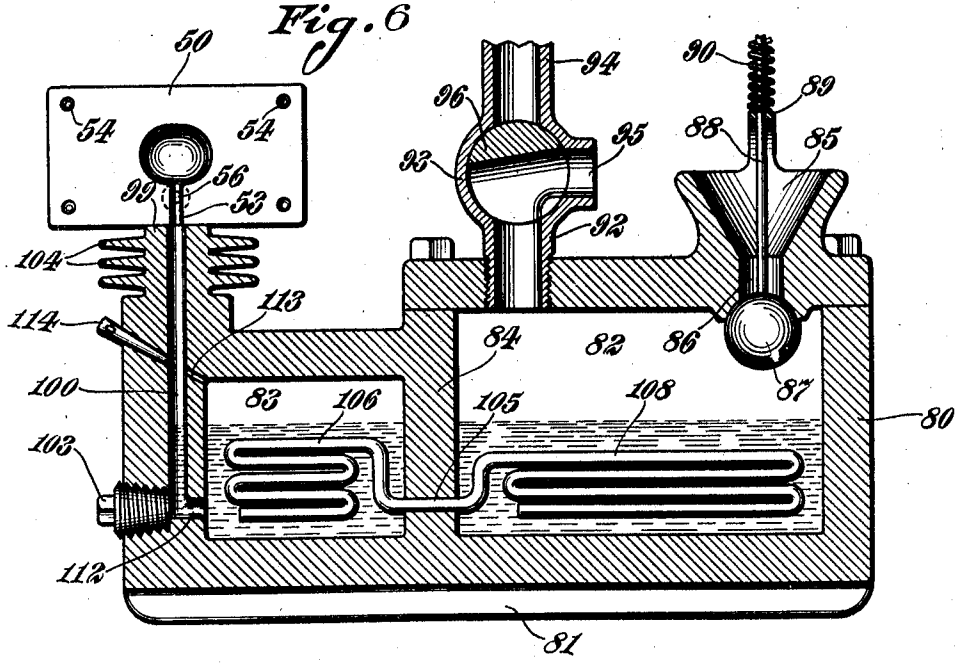

Inventor:
FLOYD S. YOUTSEY,
By John W. Bruninga
His Attorney.

Patented July 5, 1927. 1,634,482

UNITED STATES PATENT OFFICE.

FLOYD S. YOUTSEY, OF ST. LOUIS, MISSOURI, ASSIGNOR OF ONE-HALF TO CLARENCE D. LUKENS, OF ST. LOUIS, MISSOURI.

CASTING METHOD AND APPARATUS.

Application filed February 26, 1919, Serial No. 279,227. Renewed October 30, 1926.

This invention relates to methods and apparatus for casting metals under pressure.

In casting metals under pressure in metal molds or dies, which process is commonly known as die casting, the metal is forced into the mold either under the direct pressure of a piston, or under the pressure of fluid, such as compressed air acting on the molten metal to force the same through the nozzle and into the die.

While the fluid pressure method has many inherent advantages in that it eliminates the use of pistons which are usually subject to corrosive action of the molten metal, it introduces a valve or cut-off element between the melting pot and the nozzle, where the mass of molten metal acted upon by the fluid pressure is sufficient to form a number of castings. Such a valve will not only be subject to the corrosive action of the molten metal, thereby leaking and causing the molten metal to squirt out of the leaks, but this valve is liable to become clogged by freezing of the molten metal. The result, therefore, has been that casting apparatus wherein the fluid pressure acts upon a mass of molten metal sufficient to form a number of castings, has been unreliable in its operation.

It is important in the casting of metals under pressure in dies or metal molds that the cooling be as rapid as possible in order to prevent crystallization. This, however, enters another factor, namely the sudden cooling of the metal as it enters the mold, thereby causing the formation of imperfect castings. If the metal flows into the mold gradually, part of it is liable to cool or chill before the mold is completely filled with the result that the finer recesses will not be filled, even after heavy pressure is applied, for the reason that the metal adjacent these recesses will have become cooled to such an extent that even abnormal pressures will not force the chilled metal in those recesses. It is, therefore, highly important that the flow of the metal into the mold be as rapid as possible and under as high an initial pressure as possible in order to secure complete filling of the mold.

One of the inherent characteristics of fluid operation is that where fluid is admitted under pressure to a chamber through an inlet connection, it takes an appreciable time for the fluid pressure to become established or rise to its maximum value. Accordingly, where the fluid pressure is applied to a body of molten metal to force it into the mold, and the metal begins to flow into the mold upon the application of the pressure, the pressure is not built up to a maximum until the mold is completely or nearly filled, with the result that the flow of the metal into the mold is not only slow, beginning at the lowest rate of flow, but the real pressure of the fluid is not applied until the mold is entirely or nearly filled, with the result that the metal has become chilled before the same enters the finer recesses in the mold and the mold, therefore, will not be completely filled, thereby resulting in imperfect castings.

One of the objects of this invention, therefore, is to provide a method and apparatus for casting metals under pressure, in which the fluid pressure is applied to a quantity of molten metal sufficient to form a number of castings, and in which the metal, upon the application of the fluid pressure, is caused to flow through a normally open passage to fill the mold under pressure.

Another object is to provide a method and apparatus for casting metals under pressure, in which a time interval is provided between the application of the pressure and the filling of the mold, so that the casting pressure is established before the metal fills the mold.

Another object is to provide a method and apparatus for casting metals under pressure, in which the fluid pressure is applied to the molten metal and the metal caused to flow into the mold, so as to quickly fill the same at high pressure and thereby produces perfect castings.

Another object is to provide a method and apparatus for casting metals under pressure, in which the mass of molten metal flowing to the mold under the application of fluid pressure is caused to acquire momentum, so as to establish a velocity head for the purpose of quickly filling the mold at a high pressure and overcoming obstructions in flowing to and in the mold.

Another object is to improve the machine as to details of construction and further objects will appear from the detail descrip-

tion taken in connection with the accompanying drawings, in which:

Figure 1 is a longitudinal vertical section showing a casting apparatus embodying this invention and illustrating the method of casting, embodying this invention; and

Figures 2, 3, 4, 5 and 6 are views similar to Figure 1, but showing different embodiments of and illustrating the method and apparatus embodying this invention.

Referring to the accompanying drawings, and more particularly to Figure 1, the mold may be of any suitable or usual construction, the mold being preferably of sectional form and one of such sections being shown at 50 and having the usual gate 53, the usual dowel pins 54 and the usual spiral cutting device 56.

In Figures 1 to 6 inclusive, are illustrated a number of embodiments of apparatus embodying the casting of metal under pressure of a fluid. These figures also illustrate the method, although it will be understood that the method is independent of the particular mechanism employed and that the particular apparatus is only described for illustrating the several ways of carrying out the method embodying this invention.

Referring now to Figure 1, 80 designates a melting pot which may be in the form of a casting. The melting pot may be ribbed as shown at 81 so as to receive a flame for maintaining the metal hot and in a molten condition. This melting pot may be supported on a frame in any suitable manner.

The melting pot comprises a pressure chamber 82 and an auxiliary chamber 83 separated by a wall or partition 84. The pressure chamber 82 is arranged to receive the bulk of the metal and form a storage chamber; in order to permit admission of the metal to this chamber, it is provided with a funnel 85 opening into a port 86, closed by a valve 87 on a rod 88 passing through a stirrup 89, encircled by a spring 90, bearing at one end against the stirrup and at its other end against a knob 91.

Opening into the pressure chamber is a fluid connection 92 having a valve casing 93 provided with a compressed air inlet 94 and an exhaust or outlet 95. Mounted in the valve casing is a valve 96 adapted to connect the pressure chamber with either the fluid supply 94 or the exhaust 95. The funnel 85 as well as the fluid pressure connection may be mounted on and attached to a cap plate 97 secured by suitable screws 98 to the melting pot body to close the pressure chamber, it being understood that a sealed connection is made.

Formed on the melting pot and on the end of the auxiliary chamber body is a nozzle 99 adapted to cooperate with a mold such as 50, and having a passage 100 opening from the top of the auxiliary chamber 83 at one end, the top wall 101 of this auxiliary chamber being inclined upwardly towards the passage 100.

Arranged in the partition between the pressure chamber and the auxiliary chamber is a restricted passage or aperture 102, this passage being located near the bottom of the chambers so connected, and in order to permit formation of this aperture or passage, the opposite wall of the auxiliary chamber is perforated and closed by a plug 103 which plug also permits cleaning of the auxiliary chamber. The nozzle is also ribbed as shown at 104 so as to provide circular fins adapted to receive the flame for keeping this nozzle hot and, therefore, maintaining the metal in a fluid condition.

Assuming that the connected chambers have contained therein molten metal with the level of the metal in the auxiliary chamber below the top thereof, that the pressure chamber is in communication with the air and that a mold is in position over and in cooperative relation with the nozzle; the operation will then be as follows:

The operator will move the valve 96 so as to connect the pressure chamber with the pipe 94 thereby applying fluid pressure on the molten metal in the pressure chamber. As soon as the pressure is applied, the metal is forced from the pressure chamber into the auxiliary chamber. It will be noted, however, that the metal will not immediately, after the application of the fluid pressure, flow from the nozzle and into the mold, for if it did, then the metal would enter the mold at a low pressure before the maximum fluid pressure would be established in the pressure chamber, and the flow would be slow causing chilling of the entire metal with the defects in castings as heretofore pointed out.

In accordance with this invention, upon and after application of the fluid pressure to the molten metal in the pressure chamber (i. e., after opening of the valve 96 to the pipe 94,) the metal will flow through the restricted aperture 102 into the auxiliary chamber 83. The passage or aperture 102 being, however, restricted, the flow of the metal from the pressure chamber to the auxiliary chamber will be retarded; moreover, the metal will accumulate in the auxiliary chamber, until it is filled, before the same enters the passage in the nozzle and before it enters and fills the mold. This delaying action provides a time interval between the application of the pressure and the filling of the mold, and the parts are so proportioned that this time interval is sufficient to permit establishment of the pressure before the metal flows into and fills the mold. The result is, therefore, that when the metal flows into the mold, it will be under its highest pressure, resulting not only

in a quick filling of the mold, but also in a filling under the highest pressure, so that every recess in the mold is completely filled, thereby producing a true casting corresponding to the mold cavity.

The restricted opening has also an additional important function. It will be noted that when the metal issues through the opening under the pressure applied in the pressure chamber, it will issue at an increasing velocity. Accordingly, a velocity head is imparted to the metal flowing from the pressure chamber through the nozzle, so that the metal enters the mold under a velocity head. The result is, therefore, that the metal enters the mold with a splash, due to the accumulated velocity acquired by the accumulation of the metal in the auxiliary chamber and its entrance into the mold through the nozzle after the pressure and a velocity head have been established. The result is, therefore, that the metal entering the mold with a splash will enter every small recess no matter how fine in the mold so as to produce a thorough and accurate casting.

The acquiring of a velocity head by the metal from the chamber to the mold has another important feature. It often happens with the casting of metals, such as aluminum, that the passage between the pressure chamber and the mold will become clogged, thereby not only interfering with the operation in reducing the flow of the metal to the mold, but in some cases, even further chilling the metal at the clogged place and interrupting the operation altogether. Now it is well known that when a liquid flows along a passage and an attempt is made to retard or arrest the flow of that liquid, a high pressure will be set up by the arresting of the flow, known in hydraulics as a "water hammer." This pressure set up by arresting the flow is of great value compared to the initial pressure employed to cause the liquid to acquire the velocity. Accordingly, if the passage 100 or the gate in the mold should become clogged, such a high pressure will be set up that the passage will be cleared. Furthermore, upon completing the filling of the mold, the flow is arrested and where the metal acquires a velocity head in flowing to the mold, the said arresting by the filling of the mold will cause an abnormal high pressure which applies a final high pressure to the metal in the mold and forces it into every fine recess, so as to complete the formation of a thorough casting.

After the mold has been filled, the valve 96 is moved to the position shown in Figure 1, thereby not only cutting off the pressure on the molten metal in the pressure chamber, but exhausting the fluid therefrom and establishing atmospheric pressure. This causes the level of the metal in the pressure chamber to rise and the metal in the auxiliary chamber and the nozzle to drop to the normal position shown in Figure 1. The mold can now be removed, opened and the casting taken out. While there is shown a sprue cutter 56, it is found in practice that such a cutter is really unnecessary, because the metal in the mold will become chilled to such an extent that when relieving the pressure in the pressure chamber, a column of molten metal will drop from slightly above the heated nozzle, leaving a sprue of short length attached to the casting which can be cut off in any suitable manner.

In order to enhance the water hammer action, it is necessary to increase the length of the column of moving liquid which acquires a velocity. This is accomplished as shown in Figure 2, by providing the restricted aperture 102 between the pressure and auxiliary chambers with a pipe 105 which opens from the pressure chamber 82 and has a series of convolutions 106 in the auxiliary chamber 83 in order to increase its length to a maximum. This pipe is placed in position by imbedding it in the core for the auxiliary chamber, and then casting the body of the pot thereon.

As shown in Figure 3, the pipe 105 is not only provided with convolutions 106 in the auxiliary chamber, but also with convolutions 108 in the pressure chamber, so as to still further lengthen the pipe and, therefore, the column of moving liquid. This pipe is imbedded in both cores for the pressure and auxiliary chambers.

In both Figures 2 and 3, after the application of the pressure, the molten metal is caused to flow through a long pipe, thereby acquiring velocity, and any attempt to arrest the flow of the metal will cause a great increase in the water hammer pressure. It will, of course, be understood that the metal flows and accumulates in the auxiliary chamber 83, and after this chamber is filled, it flows to the nozzle. The operation is otherwise the same as in Figure 1.

In Figures 1, 2 and 3, the mold is filled from the bottom, this invention is, however, applicable to filling the mold from the top. This is shown in Figure 4, where the nozzle 99 is arranged at the bottom of the pot and in which the nozzle passage 100 opens from the top of the auxiliary chamber 83 through a curved neck connection 109. The operation is very similar to the operation of the embodiment shown in Figure 1.

The metal after filling the auxiliary chamber will flow through the top thereof, through the passage 100 and into the mold 50 placed below the same. After the pressure in the pressure chamber is, however, reduced to atmospheric pressure, the metal level will drop in the auxiliary chamber and this will return or tend to return the column of molten metal in the passage 100, thereby

preventing and stopping the flow when the mold is removed, as the pressure in the auxiliary chamber will, at that time, be below atmospheric pressure. The general operation is similar to that described in connection with Figure 1. In this construction, it may be desirable to have a vent 110 which may be closed by a removable plug 111.

In the previous constructions, the metal from the auxiliary chamber is taken from the top. It is desirable in some cases to take this metal from the bottom which is the hottest part. This is shown in Figures 5 and 6, where similar parts are indicated by similar reference characters as in Figure 1. The auxiliary chamber 83 has a connection to the nozzle passage 100 at 112 that is at the bottom of the chamber. In the operation of this embodiment, the application of the pressure to the molten metal in the pressure chamber will cause accumulation of metal in the auxiliary chamber before the metal begins to issue from the nozzle and fill the mold. In this case, however, the metal is taken from the bottom of the chamber where it is the hottest and where it is free from dross. A small vent is provided at 113 for permitting venting of the air from the top of the auxiliary chamber while the metal accumulates therein, to permit building up of the pressure and the velocity as is desirable. Where the vent is employed, the aperture closed by a plug 114 may be provided opposite the vent in order to permit formation of the vent and also opening of the same if it should become clogged. It will, of course, be understood that the vent is small compared to the passage 100—112, and that in the actual operation practically all of the flow of the metal is through the large passage 100—112, which metal is, therefore, taken from the bottom of the chamber as desired.

In the embodiment shown in Figure 6, the pipes 105, 106 and 108 are employed in order to increase the water hammer action but the openings of these pipes are arranged nearest the bottom of the chambers so as to take the metal from the lowest and hottest part of the pressure chamber and deliver it to the lowest and hottest part of the auxiliary chamber. The general operation will, of course, be the same as in the embodiment shown in Figure 5.

It will, therefore, be seen that the invention accomplishes its objects. The apparatus as a whole is simple in construction and is capable of developing great speed. The operating arm 72, for moving the mold section carriers to open and close the mold sections and locate the mold sections over the nozzle, is operable by the hand of the operator standing in front of the machine. The treadles 77 and 78, for shifting the pivotal connection in order to move the positioned mold sections into and out of engagement with the nozzle, are operable by the foot of the operator while standing in front of the machine. The parts are, therefore, so positioned and arranged as to enhance the operation, thereby enabling the castings to be made with great rapidity.

The fluid pressure system has many inherent advantages. Thus the use of metal valves and cut offs is entirely eliminated, thereby adapting the method and apparatus to molten metal having higher melting points and having great corrosive action such, for instance, as aluminum. On account of these characteristics of aluminum, it has heretofore been difficult to cast aluminum in dies under pressure. With the method and apparatus embodying this invention, however, it is possible to form clean and smooth die castings of aluminum and metals having the higher melting points. The quick filling of the mold under high pressure and under a velocity head is of special advantage in the casting of metals, such as aluminum, having a high conductivity of heat and, therefore, liable to cool very rapidly. This is also of special advantage when casting aluminum due to the fact that this metal must be cast at just as low a temperature as it will flow, otherwise it will become spongy and the castings will be hollow and weak.

It is obvious that various changes may be made in the details of the method and apparatus without departing from the spirit of this invention; it is, therefore, to be understood that this invention is not to be limited to the specific details shown and described.

Having thus described the invention, what is claimed is:

1. The method of casting, in which elastic fluid pressure is applied to the molten metal to force the same into the mold, characterized by the feature that the applied pressure is established to its maximum before the metal fills the mold.

2. The method of casting, in which elastic fluid pressure is applied to the molten metal to force the same into the mold, characterized by the feature that there is provided after the application of the pressure, a time interval sufficient to establish the applied pressure to its maximum before the metal fills the mold.

3. The method of casting, in which elastic fluid pressure is applied to the molten metal to force the same into the mold, characterized by the feature that the metal flows to the mold while the applied pressure is being established and fills the mold after the applied pressure attains its maximum.

4. The method of casting, in which elastic fluid pressure is applied to the molten metal to force the same into the mold, characterized by the feature that the metal flows to

the mold during a period sufficient to establish the applied pressure and fills the mold after the applied pressure attains its maximum.

5. The method of casting, in which elastic fluid pressure is applied to the molten metal to force the same into the mold, characterized by the feature that the metal flows to the mold, during a period sufficient to permit building up of the applied pressure, and fills the mold after the applied pressure attains its maximum.

6. The method of casting metals under pressure, comprising, applying elastic fluid pressure to the molten metal, causing the metal to flow while the applied pressure is being established to its maximum, and filling the mold under the established maximum pressure.

7. The method of casting metals under pressure, comprising, applying elastic fluid pressure to the molten metal, causing the metal to flow to the mold during a period sufficient to establish the applied pressure to its maximum, and filling the mold at the established maximum pressure.

8. The method of casting metals under pressure, comprising, applying elastic fluid pressure to the molten metal, causing the metal to flow to the mold during a period sufficient to permit building up of the applied pressure to its maximum, and filling the mold after the applied pressure attains its maximum.

9. The method of casting, in which fluid pressure is applied to the molten metal to force the same into the mold, characterized by the feature that the mold is filled under a velocity head.

10. The method of casting, in which fluid pressure is applied to the molten metal to force the same into the mold, characterized by the feature that there is, between the application of the pressure and the filling of the mold, a time interval sufficient to establish a velocity head.

11. The method of casting, in which fluid pressure is applied to the molten metal to force the same into the mold, characterized by the feature that the metal flows to the mold during a period sufficient to establish a velocity head so that the mold is filled under a pressure set up by arresting the flow of the metal.

12. The method of casting metals under pressure, comprising, applying fluid pressure to the molten metal, causing the metal to flow while a velocity head is being established, and thereafter filling the mold under the established velocity head.

13. The method of casting metals under pressure, comprising, applying fluid pressure to the molten metal, causing the metal, after the application of the pressure, to flow during a time interval sufficient to establish a velocity head, and thereafter filling the mold under the established velocity head.

14. The method of casting metals under pressure, comprising, applying fluid pressure to the molten metal, causing the metal, after the application of the pressure, to flow during a time interval sufficient to establish a velocity head, and filling the mold under a pressure set up by arresting the flow.

15. The method of casting metals by pressure, comprising, applying an increasing elastic fluid pressure to the molten metal, causing the metal to flow to the mold during a time interval sufficient to permit building up of the pressure to its maximum, and filling the mold after the applied pressure attains its maximum.

16. The method of casting, in which fluid pressure is applied to the molten metal to force the same into the mold, characterized by the feature that the flow of the metal to the mold is delayed so as to cause building up of the pressure before the mold is filled.

17. The method of casting, in which fluid pressure is applied to the molten metal to force the same into the mold, characterized by the feature that the flow of the metal to the mold is delayed for a period sufficient to establish the casting pressure before the mold is filled.

18. The method of casting, in which fluid pressure is applied to the molten metal to force the same into the mold, characterized by the feature that the flow of the metal to the mold is delayed but its velocity increased so as to cause building up of a velocity head before the mold is filled.

19. The method of casting, in which fluid pressure is applied to the molten metal to force the same in to the mold, characterized by the feature that the flow of the metal to the mold is delayed but its velocity increased so as to cause building up of a velocity head, and filling the mold under a pressure set up by arresting the flow.

20. The method of casting, in which fluid pressure is applied to the molten metal to force the same into the mold, characterized by the feature that the metal flowing to the mold passes through a restricted aperture so as to delay its filling the mold until the casting pressure is established.

21. The method of casting, in which fluid pressure is applied to the molten metal to force the same into the mold, characterized by the feature that the metal flowing to the mold passes through a restricted aperture so as to establish a velocity head and delay filling of the mold until the velocity head is established.

22. The method of casting metals under pressure, comprising, applying elastic fluid pressure to the molten metal, causing the metal to accumulate while the applied pres-

sure, is being established to its maximum, and delivering the accumulated metal to the mold.

23. The method of casting metals under pressure, comprising, applying elastic fluid pressure to the molten metal, causing the metal to flow and accumulate while the applied fluid pressure is being built up to its maximum, and filling the mold under the established maximum pressure.

24. The method of casting metals under pressure, comprising, applying fluid pressure to the molten metal, causing the metal to flow through a restricted aperture and accumulate for a period sufficient to permit building up of the fluid pressure, and filling the mold under the established pressure.

25. The method of casting metals under pressure, comprising, applying fluid pressure to the molten metal, causing the metal to flow through a restricted aperture and acquire momentum beyond the aperture, and filling the mold under the velocity head so established.

26. The method of casting metals under pressure, comprising, applying fluid pressure to the molten metal, causing the metal to pass through a long restricted passage to the mold, and delaying the filling of the mold until the casting pressure is established.

27. The method of casting metals under pressure, comprising, applying fluid pressure to the molten metal, causing the metal to pass through a long restricted passage to the mold, causing the metal to flow to the mold during a time interval, and then filling the mold.

28. The method of casting metals under pressure, comprising, applying fluid pressure to the molten metal, causing the metal to pass through a long restricted passage to the mold in order to acquire momentum, and filling the mold under the velocity head so established.

29. The method of casting metals under pressure, comprising, applying elastic fluid pressure to a quantity of molten metal sufficient to form a number of castings, causing the metal upon application of the fluid pressure to flow to the mold while the final pressure is being established to its maximum and fill the same to form a casting, and relieving the fluid pressure when the casting is formed.

30. The method of casting, in which fluid pressure is applied to a quantity of molten metal sufficient to form a number of castings, characterized by the feature that the fluid pressure causes the metal to flow through a normally open long restricted passage to the mold and form the casting and that the fluid pressure is relieved when the casting is formed.

31. The method of casting, in which the molten metal is maintained in a pressure chamber and a connected passage leading to the mold, comprising, applying fluid pressure to the chamber, causing the metal to flow through the passage to the mold while the applied pressure is being built up, and filling the mold after the applied pressure has been established to its maximum.

32. The method of casting, in which the molten metal is maintained in a pressure chamber and a connected passage leading to the mold, comprising, applying fluid pressure to the chamber, delaying the flow of the metal to the mold until the casting pressure is established, and filling the mold under the established casting pressure.

33. The method of casting, in which the molten metal is maintained in a pressure chamber and a connected passage leading to the mold, comprising, applying fluid pressure to the chamber, causing the metal to flow through the passage to the mold and accumulate momentum during such passage, and filling the mold under the velocity head so established.

34. A casting apparatus, comprising, a pressure chamber for molten metal, means for applying elastic fluid pressure thereto, a nozzle adapted to receive a mold, and means for conducting the metal from said chamber to said nozzle, adapted to cause building up of the applied pressure to its maximum before the metal fills the mold.

35. A casting apparatus, comprising, a pressure chamber for molten metal, means for applying elastic fluid pressure thereto, a nozzle adapted to receive a mold, and means for conducting the metal from said chamber to said nozzle, adapted to insure the establishment of the applied pressure to its maximum before the metal fills the mold.

36. A casting apparatus, comprising, a pressure chamber for molten metal, means for applying fluid pressure thereto, a nozzle adapted to receive a mold, and means for conducting the metal from said chamber to said nozzle, adapted to cause the metal in flowing to the mold to accumulate momentum and establish a velocity head.

37. A casting apparatus, comprising, a pressure chamber for molten metal, means for applying fluid pressure thereto, a nozzle adapted to receive a mold, and means for conducting the metal from said chamber to said nozzle, adapted to cause the metal to flow to the mold for a distance and period sufficient to accumulate momentum and establish a velocity head.

38. A casting apparatus, comprising, a pressure chamber for molten metal, means for applying fluid pressure thereto, a nozzle adapted to receive a mold, and means for conducting the metal from said chamber to said nozzle, adapted to delay the flow of the metal to the mold in order to permit building up of the casting pressure.

39. A casting apparatus, comprising, a

pressure chamber for molten metal, means for applying fluid pressure thereto, a nozzle adapted to receive a mold, and means for conducting the metal from said chamber to said nozzle, including a restricted aperture leading from said chamber, adapted to delay the flow of the metal to the mold in order to permit building up of the casting pressure.

40. A casting apparatus, comprising, a pressure chamber for molten metal, means for applying fluid pressure thereto, a nozzle adapted to receive a mold, and means for conducting the metal from said chamber to said nozzle, including a restricted aperture leading from said chamber, adapted to cause the metal in flowing to the mold to accumulate momentum and establish a velocity head.

41. A casting apparatus, comprising, a pressure chamber for molten metal, means for applying fluid pressure thereto, a nozzle adapted to receive a mold, and a long restricted passage for conducting the metal from said chamber to said nozzle adapted to cause the metal in flowing to the mold to accumulate momentum and establish a velocity head.

42. A casting apparatus, comprising, a pressure chamber adapted to receive a sufficient quantity of molten metal to form a number of castings, means for admitting and exhausting pressure fluid to and from said chamber, and a normally open restricted passage connecting said chamber with said nozzle, adapted upon admission of fluid, to retard flow of metal from said chamber to said nozzle, and adapted upon exhaust of the fluid, to cause the metal to flow back in said passage.

43. The method of casting, in which elastic fluid pressure is applied to the molten metal to force the same into the mold, characterized by the feature that there is provided after the application of the pressure, a time interval sufficient to establish a high velocity head in the metal flowing to the mold, and to build up the applied pressure to its maximum before the metal fills the mold.

44. The method of casting, in which elastic fluid pressure is applied to the molten metal to force the same into the mold, characterized by the feature that there is provided after the application of the pressure, a time interval sufficient to establish a high velocity head in the metal flowing to the mold, and to build up the applied pressure to its maximum before the metal fills the mold and that the mold is filled under the established velocity head and at the maximum applied pressure.

45. The method of casting, in which elastic fluid pressure is applied to the molten metal to force the same into the mold, characterized by the feature that a fluid head is established in the molten metal before filling the mold adapted to apply a high casting pressure upon filling the mold.

46. The method of casting, in which elastic fluid pressure is applied to the molten metal to force the same into the mold, characterized by the feature that a velocity head is established in a portion of the molten metal flowing to the mold before the mold is filled.

47. The method of casting, in which elastic fluid pressure is applied to the molten metal to force the same into the mold, characterized by the feature that a velocity head is established in a portion of the molten metal flowing to the mold before the mold is filled, while the fluid pressure on the metal attains its maximum, and that the mold is filled under the attained maximum fluid pressure and velocity head.

In testimony whereof I affix my signature this 10th day of Feb., 1919.

FLOYD S. YOUTSEY.