May 16, 1950 H. M. VAN PIETERSOM ET AL 2,507,839

LIGHTER

Filed Oct. 15, 1946

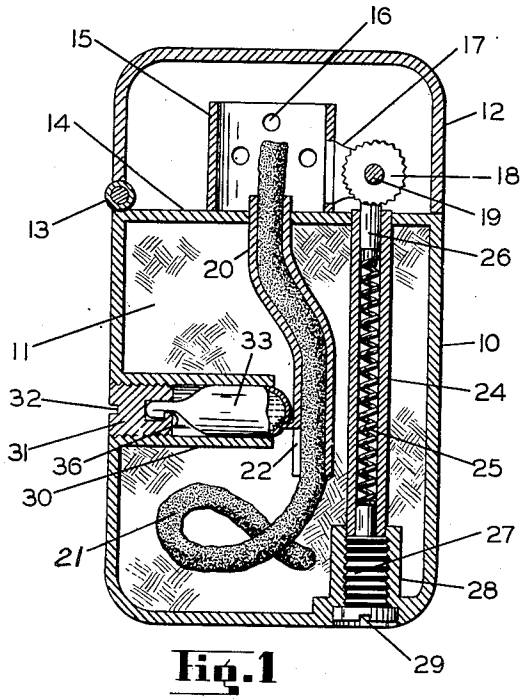

Fig. 1

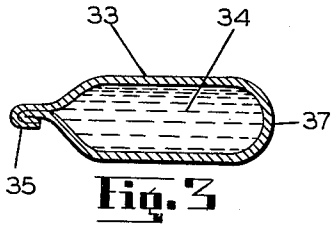

Fig. 3

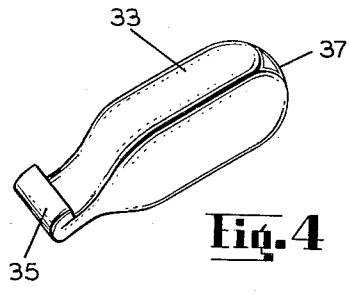

Fig. 4

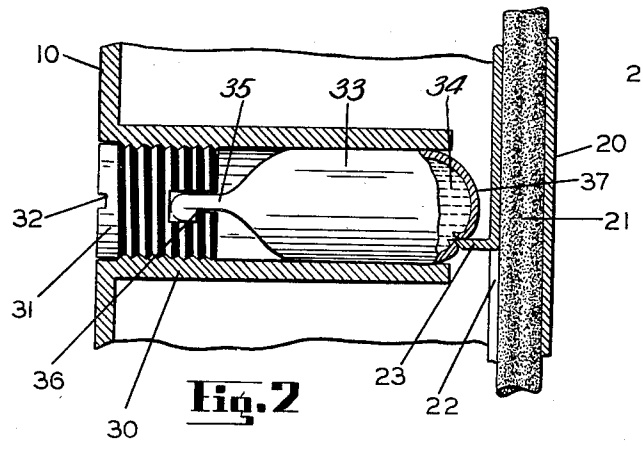

Fig. 2

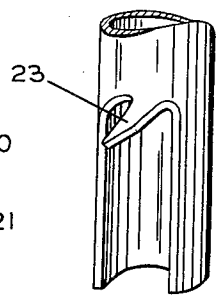

Fig. 5

INVENTORS
HAROLD M. VAN PIETERSOM
BY FREDERICK L. OBST
Christian R. Nielsen
ATTORNEY.

Patented May 16, 1950

2,507,839

UNITED STATES PATENT OFFICE

2,507,839

LIGHTER

Harold M. Van Pietersom, Milwaukee, and
Frederick L. Obst, Wauwatosa, Wis.

Application October 15, 1946, Serial No. 703,434

1 Claim. (Cl. 67—7.1)

1

Our invention relates to a fuel charging means for lighters and more particularly to a means for charging a conventional lighter such as is commonly employed for lighting cigarettes or cigars.

An object of our invention is to provide a clean, convenient fuel cartridge that may be easily manufactured and applied to the lighter.

Another object of our invention is to construct a cartridge and lighter arrangement in a manner to insure ease of insertion and removal of the cartridge.

Still another object of our invention is to construct a cartridge in a manner that will facilitate ease of its manufacture, its filling and its sealing.

A still further object of our invention is to construct a piercing unit within the lighter in a manner to permit ready access of the fluid fuel to the wick arrangement to enable its being carried upward by capillary attraction.

It is manifest to anyone familiar with the use and manipulation of lighters that the fuel evaporates and it becomes necessary at times to saturate the packing within the container with a liquid fuel. This fuel is usually stored in a separate container and is transferred from the container to the lighter. It is often very inconvenient to carry the additional fuel or store it in a convenient place where it is accessible for use. With the device described herein it is only necessary to carry a small compact sealed cartridge and when the fuel in thhe lighter becomes exhausted, the old cartridge can be readily removed and a new cartridge inserted within the lighter without spilling or wasting any of the liquid fuel.

Other and further objects of our invention will become more apparent as the description proceeds and when taken in conjunction with the drawing in which

Figure 1 is a fragmentary cross-sectional view of the lighter showing the arrangement of the component parts.

Figure 2 is a fragmentary cross-sectional view of the cartridge and adapter showing the piercing unit engaging the cartridge.

Figure 3 is a cross-sectional view of the filled fuel cartridge.

Figure 4 is a perspective view of the sealed cartridge, and

Figure 5 is a fragmentary sectional view of the wick tube illustrating the manner in which the piercing member projects outward above the slot in the wall of the tube.

2

Similar characters of reference indicate corresponding parts throughout the several views and referring now to the same, the character 10 shows a casing or container having the packing 11 acting as a fuel reservoir. This packing 11 is constructed of absorbent material and the liquid fuel saturates the packing in the usual manner. The casing 10 has a cover 12 hingedly attached at 13 to the wall of the casing 10. The top wall 14 of the casing 10 is provided with a wind guard 15 which has a plurality of apertures 16 disposed through its walls. The wind guard 15 is shown provided with a bracket 17 in which a sparking wheel 18 is rotatably mounted on a shaft 19.

Centrally disposed within the wind guard 15 and extending outward from the top wall 14 of the casing 10 is shown a tubular sleeve 20 acting as a support for a wick 21 made of absorbent material. This tube 20 is provided with a slot 22 at its lower end and has a portion 23 acting as a piercing member extending outward at right angles to the tube 20. There is an auxiliary tube 24 extending through the entire casing 10, fastened at its bottom portion and extending to the top wall 14 of the casing 10. This auxiliary tube 24 houses a resilient member 25 and guides a section of flint 26, acting as sparking material, at its upper end for contact with the sparking wheel 18. There is a plug member 27 threadedly engaging the bottom portion 28 of the casing 10. This plug member 27 is provided with a slot 29 to permit its rotation, and the adjustment of the tension of the resilient member 25 against the flint member 26 which contacts the wheel 18. The casing 10 has an inwardly extending adapter member 30 extending at right angles to the outer wall of the casing 10. This adapter 30 is provided with a plug member 31 threadedly engaging its inner surface and the plug 31 is provided with a slot 32 to permit its rotation.

The adapter 30 is disposed to receive a cartridge member 33 which is constructed of soft material such as metal of a very thin cross section. This cartridge 33 is filled with the liquid fuel 34 and is sealed at its rearward end 35 in a manner to prevent the liquid fuel 34 from evaporating or leaking out of the cartridge.

When the lighter arrangement is put into use the tube 20 may be raised or lowered to any convenient position with the casing 10 and the cartridge 33 may be inserted into the adapter 30 in a manner to permit the end 35 of the cartridge 33 to engage a groove having a lip 36 within the plug 31. The cartridge 33 being inserted into the

plug 31 prior to being placed within the adapter 30. As the plug 31 is revolved by threaded engagement with the adapter 30 it will cause the cartridge 33 to push inward to contact the point of the piercing member 23 forming a part of the tube 20 and as the piercing member 23 engages the radially formed front surface 37 of the cartridge 33 it will cause the liquid 34 to flow out of the cartridge 33 and saturate the wick 21. The surplus liquid fuel 34 will be caused to enter the packing 11 and saturate it for use.

It will be manifest that the arrangement of the tube 20 in its relation to the cartridge 33 will permit piercing the cartridge 33 either centrally or at a point below or above the center of the cartridge 33 thus permitting either a round hole to be pierced within the cartridge or causing the piercing member 23 to cut and remove a complete portion of the cartridge 33 at its end 37, due to rotating the cartridge 33 by means of the plug 31 during the insertion operation.

Obviously, the cartridges 33 may be carried by the user as a separate unit and may be inserted when new liquid fuel is needed within the lighter arrangement. It will also be noted that when the plug 31 is revolved for removal, it will cause the cartridge 33 to pull out with the plug 31 and a new cartridge may be inserted within the slot 36 on the plug 31.

While we have herein shown and disclosed a particular arrangement and construction of the component parts constituting the fuel charging means, it will be manifest that any type of sparking wheel or sparking arrangement may be employed and any conventional type of lighter may be used, the shape or the contour of the case not having any particular bearing on the operativeness of the device, and we reserve the right to make such changes in the form and configuration of the component parts as we might deem necessary or convenient without departing from the spirit of our invention or the scope of the appended claim.

Having thus described our invention, what we claim and desire to secure by Letters Patent in the United States is:

A device of the character described comprising a lighter casing forming a complete enclosure, a sparking wheel attached to the upper face of said enclosure, a cover member hingedly attached to said enclosure for the protection of said sparking mechanism, a mass of absorbent material disposed within said enclosure, a wick disposed within said absorbent material, said wick projecting outward through the upper face of said enclosure, a windshield mounted on said upper face and surrounding the upper portion of the wick and providing a bracket for rotatably mounting said sparking wheel, said wick constructed of an absorbent material, a tubular member adjustably mounted within said enclosure, said tubular member employed for supporting said wick, and open at its upper end to permit said wick to extend outward, said tubular member provided with an outwardly extending piercing element projecting at right angle to said tube, said tubular member further provided with a slot in its outer wall at a point below said piercing element, a cartridge adapter extending inwardly from the outer walls of said enclosure in direct alignment with said piercing member, a sealed cartridge constructed of thin soft material, said cartridge acting as sealed container for liquid fuel, and a plug arranged for engagement with the inner surface of said adapter, said plug provided with a retaining means to support one end of said cartridge, thereby permitting said cartridge to force toward said piercing element when said plug engages said adapter a flint having one end in contact with said sparking wheel and a spring pushing on said flint for maintaining such contact, said spring movable within a tubular member mounted in said casing and means for maintaining said spring under tension.

HAROLD M. VAN PIETERSOM.
FREDERICK L. OBST.

REFERENCES CITED

The following references are of record in the file of this patent:

UNITED STATES PATENTS

Number	Name	Date
1,748,323	Aronson	Feb. 25, 1930
1,895,032	Fisher	Jan. 24, 1933
2,368,070	Sandor	Jan. 23, 1945
2,395,783	Holtzman	Feb. 26, 1946

FOREIGN PATENTS

Number	Country	Date
10,826	Great Britain	May 7, 1912
723,190	France	Jan. 12, 1932