(12) UK Patent Application (19) GB (11) 2542379 (13) A

(43) Date of A Publication 22.03.2017

(21) Application No: 1516469.2

(22) Date of Filing: 17.09.2015

(71) Applicant(s):
Chris Peace
11 Grebe Close, Fareham, Hampshire, PO16 8QN, United Kingdom

(72) Inventor(s):
Chris Peace

(74) Agent and/or Address for Service:
Ipconsult
21A Commercial Road, SWANAGE, Dorset, BH19 1DF, United Kingdom

(51) INT CL:
G10D 3/12 (2006.01) ***G10D 1/00*** (2006.01)

(56) Documents Cited:
WO 2011/071552 A1 **JP 2001142455 A**
US 4608906 A1

(58) Field of Search:
INT CL **G10D**
Other: **EPODOC, WPI, Internet**

(54) Title of the Invention: **Stop bar for a stringed musical instrument**
Abstract Title: **Stop bar for a stringed musical instrument with angled guides**

(57) A stop bar (tail piece or stop tail) 100 for a stringed musical instrument arranged to anchor the strings 30 to the instrument. The bar is attached to the sound board 40 of the instrument and the strings pass through guides 112 in the bar and are held in place at one end 114. The strings form a straight line from the point where they are anchored to where they meet the saddle 22 of the instrument. The guides may be formed by guide holes (tubes) through the bar. Each guide may be at an angle ‘gamma’, between 1 and 89 degrees - preferably 16 degrees, to the board when the bar is in position, all of the guides may be at the same angle. This removes the need for the strings to bend as they exit the stop bar (16, Fig.1), reducing the chances of the string breaking. The stop bar may further comprise the saddle.

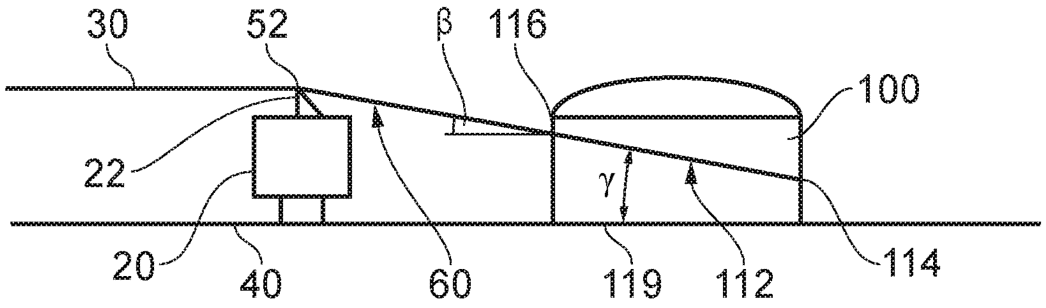

FIG. 2

GB 2542379 A

At least one drawing originally filed was informal and the print reproduced here is taken from a later filed formal copy.

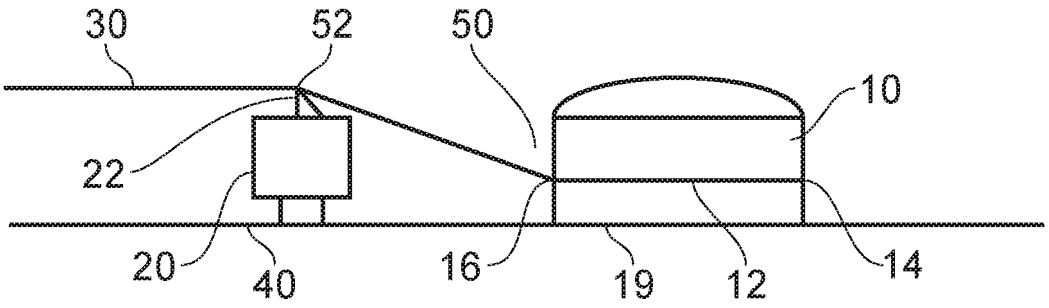

FIG. 1

23 12 16

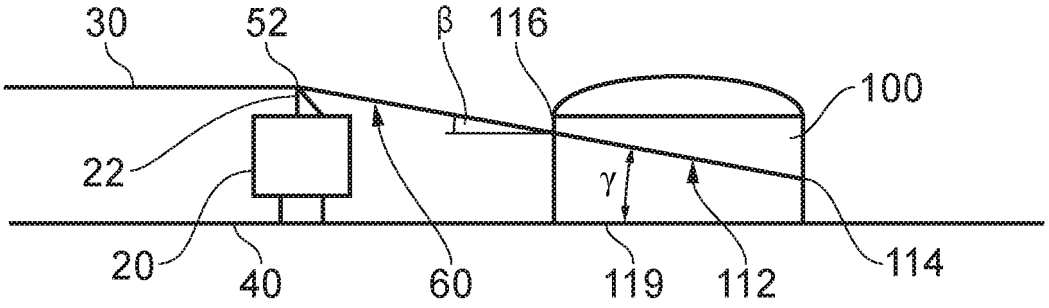

FIG. 2

23 12 16

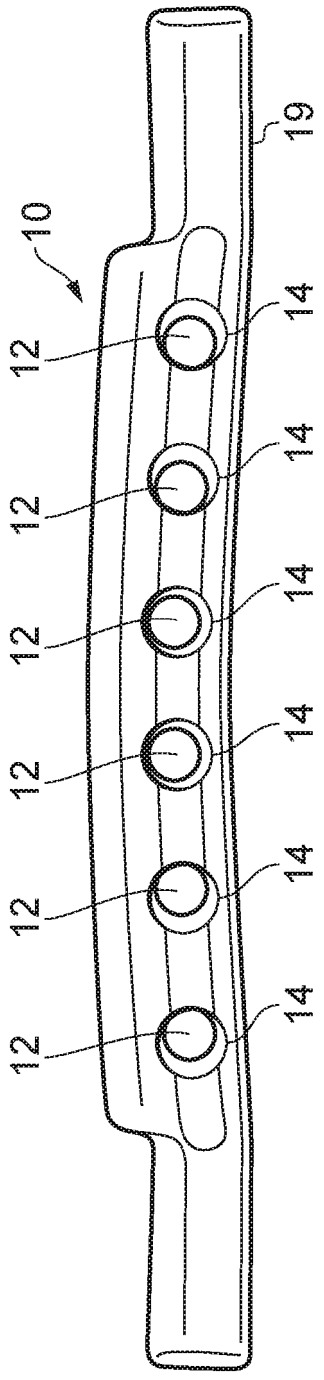

FIG. 3

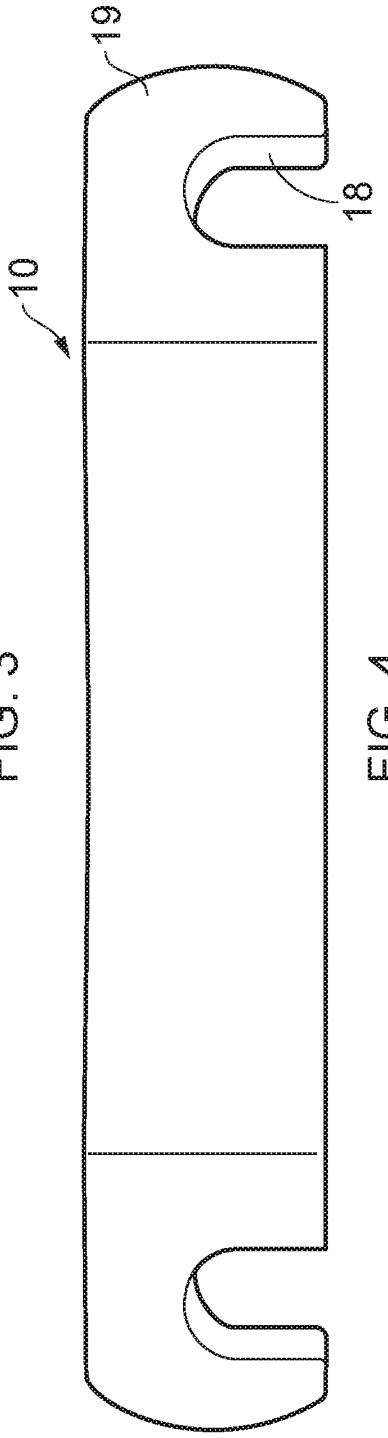

FIG. 4

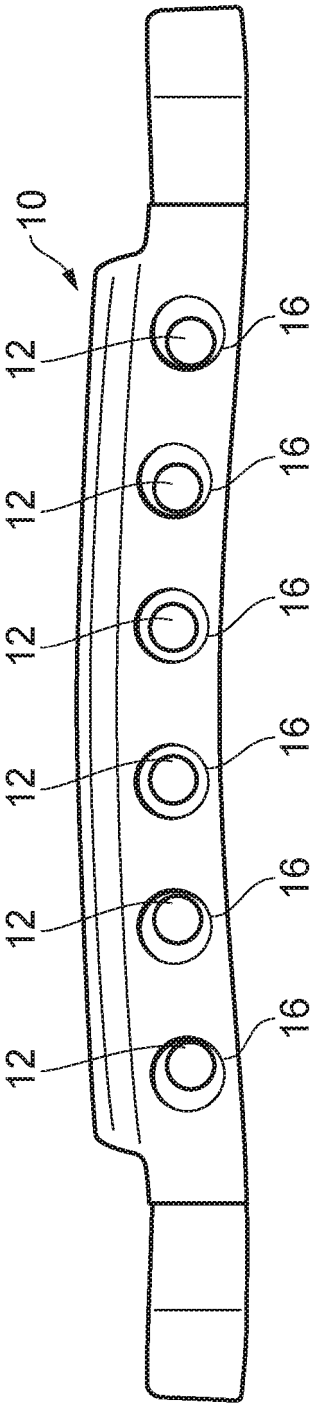

FIG. 5

23 12 16

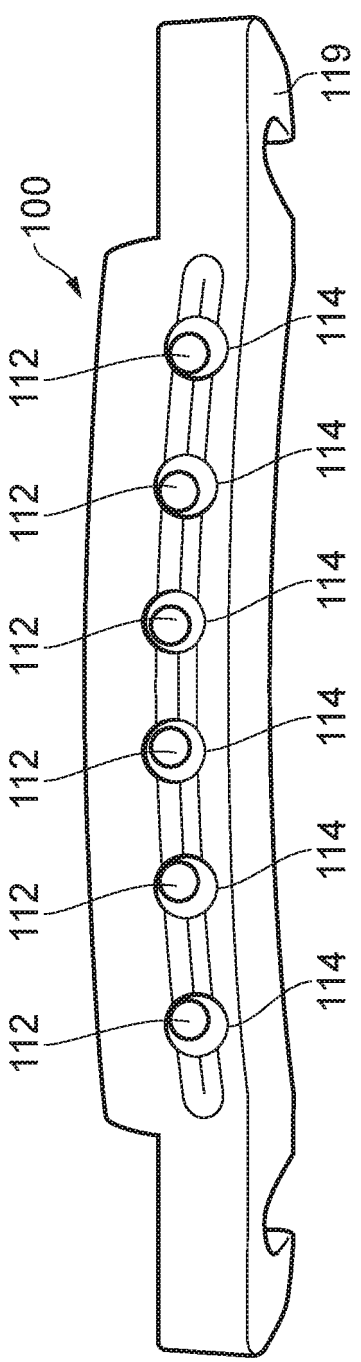

FIG. 6

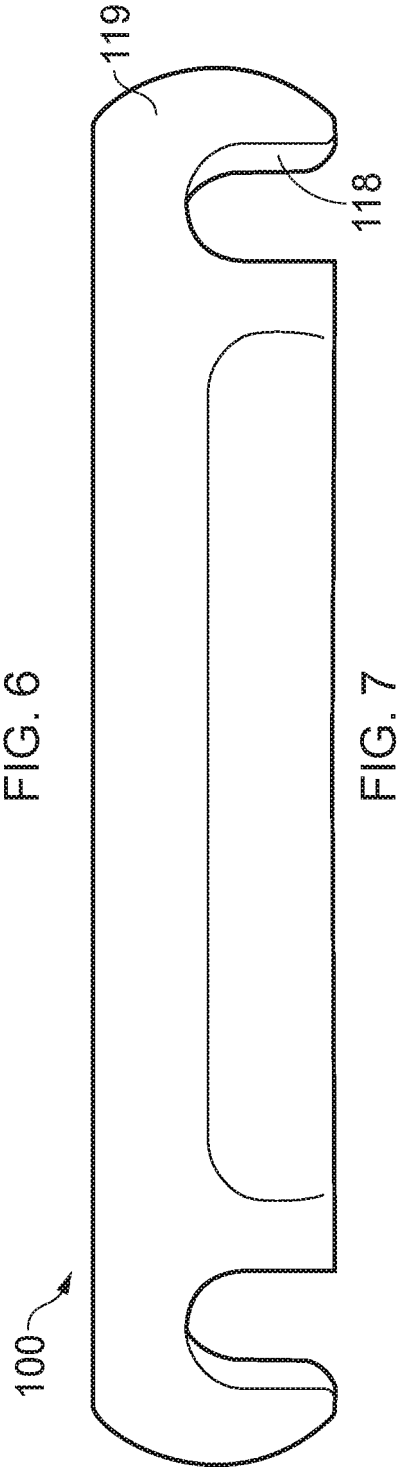

FIG. 7

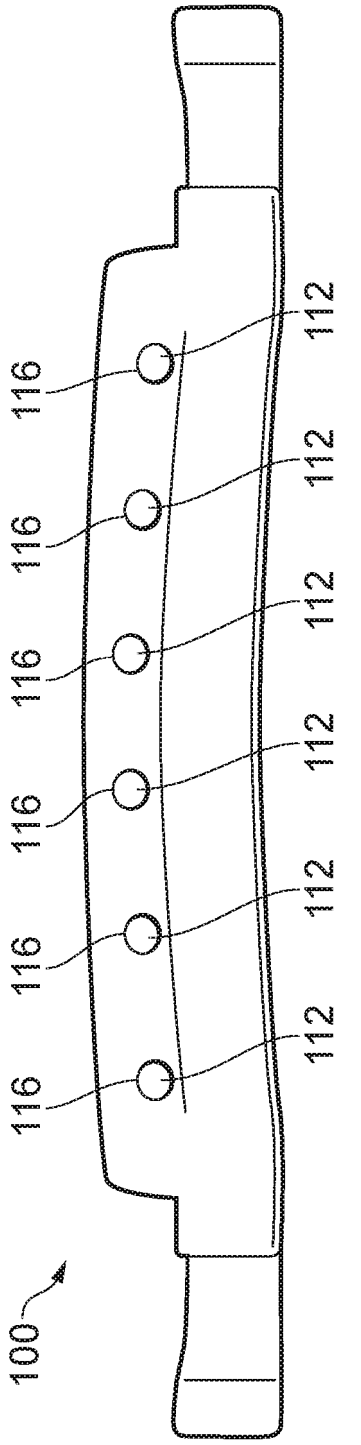

FIG. 8

Stop Bar for a Stringed Musical Instrument

Field of the Invention

This invention relates generally to a stop bar for a stringed musical instrument. The field of the invention is stringed musical instruments. The purpose of the stop bar is to anchor a musical string to the sound board of the musical instrument.

Background

Stringed musical instruments such as guitar, banjo, mandolin, and violin and so on, comprise a body from which a neck extends. The instrument has strings which are anchored to the body and stretched over the neck.

The body comprises a sound board and the strings are anchored to the sound board by a stop bar.

The strings are stretched from the stop bar over a saddle. The saddle is located between the sound board and the strings. The saddle supports the strings so that the strings are held away from the sound board and the neck.

Typically the strings are anchored to the stop bar and the stop bar is joined to the sound board. Thus the strings are effectively anchored to the sound board by the stop bar.

To enhance the musical sound of the sound board the strings are anchored very close to the sound board by stop bar.

Prior Art

Typically saddle supports the strings a further distance away from the sound board than the sound board.

The strings are strung from the stop bar to the saddle. So there is a portion of the

strings that are suspended between the stop bar and the saddle.

The strings tend to break at the pinch points where they are suspended by the saddle and grasped by the stop bar. Replacing broken strings is an unwanted cost and annoying waste of time for musicians.

Summary of the Invention

According to one aspect of the present invention there is stop bar arranged to attach to a sound board of a stringed musical instrument and to guide strings of the instrument, said strings are anchored to the stop bar at a first location and pass through guides formed in the stop bar so that a string defines a straight line from the first location to a saddle which separates the strings from the sound board.

Advantageously the string is supported solely by the anchor point and the saddle so the string is not likely to break between the anchor point and the saddle.

Preferably each guide is formed by a straight tube through the bar.

Advantageously each guide is easily formed by simply drilling a guide hole straight through the bar. Advantageously the stop bar cooperates with an anchor for the string. For instance the string may have a ball attached at a free end. The ball diameter is greater than diameter of the guide hole. The ball and stop bar cooperate to anchor the string. Where the ball is anchored against the stop bar is the first location of the string in the straight line.

Preferably each guide is arranged to align with the straight line by attachment of the stop bar to the sound board. Advantageously a stringed musical instrument is easily retrofitted or manufactured with the stop bar. Simply attaching the stop board to the sound board will align the guides so that when the string is anchored to the stop bar and pulled over the saddle so that the saddle supports the string, the string will define a straight line from the first location to a saddle which separates the strings from the sound board.

Preferably the stop bar is arranged so that attachment of the stop bar to the sound

board aligns each guide at an angle relative to the sound board of between 1 degree and 89 degrees. Preferably each guide is set in the stop bar permanently such as by drilling the guide as a guide hole through the stop bar. Attaching the stop bar to the sound board sets each guide at an angle relative to the sound board. In use for playing music on the instrument the string is strung from the first location to the saddle so stringing the musical instrument sets the string along the straight line. Advantageously the stop bar is arranged so that attachment of the stop bar to the sound board aligns each guide at angle relative to the sound board which is co-linear with the straight line. Preferably the angle is between 1 degree and 89 degrees because the string is strung between the first location and the saddle at the same angle relative the sound board of between 1 degree and 89 degrees.

The angle which provides for a straight line from the first location to the saddle is determined in part by distance between the point on the saddle which supports the string and the first location and in part by the direction from the first location to the point on the saddle.

Preferably attachment of the stop bar to the sound board aligns each guide at an angle relative to the sound board of between 5 degrees and 35 degrees. Advantageously many stringed musical instruments are strung so that the angle relative to the sound board of the string between the first location and the saddle is between 5 degrees and 35 degrees.

Preferably attachment of the stop bar to the sound board aligns each guide at an angle relative to the sound board of between 10 degrees and 20 degrees. Advantageously guitars are typically strung so that the angle relative to the sound board of the string between the first location and the saddle is between 10 degrees and 20 degrees.

Preferably attachment of the stop bar to the sound board aligns each guide at an angle relative to the sound board is 16 degrees. Advantageously guitars experimentation has shown that this angle is advantageous because the string is pulled firmly against the saddle for good musical tone by being strung straight from the first location on the stop bar to the saddle.

Preferably all guides are set the same angle in the stop bar. So when the stop bar is

attached to the sound board all the guides are set at the same angle relative to the sound board. For example a stop bar suitable for six string guitar preferably has six guides, one guide for each string. The six strings are aligned in parallel; this includes the portions of the strings between the saddle and the first location where the strings are also in parallel. The guides are all set the same angle so all the strings are guided in parallel straight lines by guides.

Preferably the stop bar comprises the saddle. The angle which provides for a straight line from the first location to the saddle is determined in part by distance between the point on the saddle which supports the string and the first location and in part by the direction from the first location to the point on the saddle. Advantageously by comprising the stop bar with the saddle the distance and direction between the first location and the point on the saddle may be preselected so that the string will align with a preferred angle with respect to the sound board when the stop bar is attached to the stop bar. As mentioned above preferred angles are between 5 and 35 degrees, more preferred angles are between 10 and 20 degrees, and a most preferred angle is 16 degrees. The precision of all angles specified is plus or minus 1 degree.

According to another aspect of the invention there is a stringed musical instrument comprising a stop bar as described herein. Advantageously the strings of the instrument are less prone to breakage than stringed musical instruments which do not comprise the stop bar. A stringed instrument strung with strings of the present invention has strings suspended straight from the first location to the saddle. Hence the strings are unlikely to break where the strings exit the stop bar since the stop bar does not bend the strings. The strings are strung in a straight line from the first location to the saddle.

The invention will now be described, by way of example only, with reference to the accompanying drawings in which:

Brief Description of the Figures

Figure 1 shows a schematic of a stop bar of the prior art attached to a sound board which anchors a string of a musical instrument supported by a saddle;

Figure 2 shows a schematic of a stop bar of according to the present invention attached to a sound board which anchors a string of a musical instrument supported by a saddle;

Figure 3 shows a view of the anchor side of a stop bar according to the prior art;

Figure 4 shows a view of the sound board side of a stop bar according to the prior art;

Figure 5 shows a view of the neck side of a stop bar according to the prior art; and

Figure 6 shows a view of the anchor side of a stop bar according to the invention;

Figure 7 shows a view of the sound board side of a stop bar according to the invention; and

Figure 8 shows a view of the neck side of a stop bar according to the invention.

Detailed Description of the Invention

Referring to the Figures, there is shown in Figure 1 a stop bar 10 of the prior art attached to a sound board 40 of a body of a stringed instrument. The stop bar 10 anchors a string 30 of the musical instrument to the sound board 40. The string 30 is supported away from the sound board 40 by a saddle 22.

The saddle 22 attached to the sound board 40 by a bridge 20. The saddle 22 is located between the stop bar 10 and a neck of the musical instrument which extends from the body. The neck is not shown in Figure 1.

As can be seen in Figure 1, the stop bar of the prior art 10 bends the string 30 where it grasps them. There is a break point 50 on the string 30 where at the exit location 16 on the stop bar. The exit location 16 is where the string 30 is bent toward the saddle 22. The there is another break point 52 of the string at the location where string is supported the saddle 22 on the string.

Figure 1 shows the string 30 guided through the stop bar according to the prior art 10

by a guide 12 formed in the stop bar. The guide 12 is aligned substantially parallel to the sound board 40. The string 30 follows a line from the exit of the guide 16 to the saddle 22 that is not parallel to the sound board 40.

The stop bar according to the prior art 10 is arranged with a flat side 19 for attaching it to the sound board 30. So by attaching the flat side 19 to the sound board 30, the guide 12 is aligned substantially parallel to the sound board.

Figures 3, 4, and 5 show the anchor side of the stop bar, the sound board side of the stop bar, and the neck side of the stop bar of the prior art 10 respectively.

The anchor side of the stop bar is so called because the string 30 has attached to one and an anchor ball. The string 30 pulls the anchor ball against the anchor side of the stop bar 14 where the guide 12 exits the stop bar 10.

In Figure 3 the exit 14 of the guide 12 can be seen on the anchor side of stop bar. In Figure 5 the exit 16 of the guide 12 can be seen on the neck side of the stop bar. The exit 14 on the anchor side is at the same distance from the flat side 19 of the stop bar of the prior art 10 as the exit 16 on the neck side. This is because the guide 12 through the stop bar according to the prior art 10 is substantially parallel to the sound board 40 when the stop bar is attached to the sound board.

Figure 2 shows a stop bar according to the invention 100. The stop bar according to the invention 100 is attached to a sound board 40. The stop bar 100 has a flat surface 119 on the side of the stop bar that is attached to the sound board 40. The flat surface 119 facilitates attachment of the stop bar 100 to the sound board 40.

The stop bar 100 is an elongate object. When attached to the sound board 40 the stop bar 100 has a side which is nearest the neck of instrument and an opposing side against which the string 30 is anchored. These are the longest sides of the elongate object.

The stop bar according to the invention 100 has a guide 112 through it. The guide 112 penetrates through the stop bar from the neck side to the anchor side.

In the stop bar of the invention 100 guide 112 is set an angle with respect to the flat

side 119. When the flat side 119 is set against the sound board 40, the guide 114 is set at an angle with respect to the sound board.

The angle of the guide 112 with respect to the flat side 119 is preselected so that when the stop bar of the invention 100 is attached to the sound board 40 the guide 112 is aligned with the string 30. The guide 112 penetrates straight through the stop bar 100. The string 30 follows a straight line from the location of the exit 114 of the guide 112 located on the anchor side of the stop bar 100 to the location of the exit 116 of the guide 112 located on neck side of the stop bar 110. As shown in Figure 2 the string 30 continues in the same straight line from the exit 116 of the guide to the saddle.

An advantage of the stop bar 100 of the present invention is the angle of the guide 112 with respect to the flat side 119 is such that the string 30 follows a straight line from the location 114 where it is anchored to the stop bar to the location 52 where it is supported by the saddle 22. With the stop bar of the present invention there is no breaking point on the string at the exit 116 of guide 112 because the string does not bend at the exit 116. This can be seen in Figure 2.

In contrast, the stop bar of the prior art 10 has a breaking point 50 which can be seen in Figure 1. The string is forced to bend by the edge of the stop of the prior art 10 at the location of the exit 16 of the guide 12 on the neck side of the stop bar 10.

The angle of the string 30 with respect to the sound board is shown as 'beta' in Figure 2. The angle of the guide 112 with respect to the flat side 119 is shown as 'gamma' in Figure 2. The angle 'beta' is the same as the angle 'gamma'. So the string 30 continues in a straight line through the guide 112 to the saddle 22.

The angle of the guide 112 'gamma' with respect to the flat side 112 that makes the guide 112 align with the straight path of the string depends on the relative distance and angle of the saddle with respect to the stop bar 100.

The angle of the guide 'gamma' may be any angle from 1 to 89 degrees so that the string 30 follows a straight line from the location 114 of the guide 112 where it is anchored to the saddle 22 depending on the relative distance and angle of the saddle with respect to the stop bar 100.

The angle 'gamma' to make the string follow the straight line will be between 5 and 35 degrees for some stringed musical instruments. The angle 'gamma' to make the string follow a straight line for some stringed musical instruments will be between 10 and 20 degrees. An angle 'gamma' which is particular advantageous is 16 degrees because the string 30 bends 16 degrees at the saddle 22. The string 30 is pulled tight against saddle for good musical tone.

The embodiment of the stop bar of the invention 100 shown in Figures 6, 7, and 8 has an angle gamma of about 16 degrees. The height above the flat side 1119 of the exit 114 on the anchor side of the stop bar shown in Figure 6 is lower than the height of the exit 116 on the neck side of the stop bar 100. This is due to the angle 'gamma' of the guide 112 which is a guide hole straight through the stop bar 100. The guide hole passes through the guide along a straight path. The axis of the straight path and the axis of the string which are substantially coincident as the string follows a straight line through the guide hole. Preferably the diameter of the guide hole is greater than diameter of the string. Preferably while the string are being played the relative diameter of the guide hole to the diameter of the string through the guide hole is is such the string does not touch the side of guide hole while the string is vibrating.

Figure 2 and Figures 6, 7, and 8 show the stop bar 100 according to the invention arranged to attach to a sound board 40 of a stringed musical instrument and to guide musical strings 30 anchored to the stop bar in a straight line from an anchor 114 to a saddle 22 which separates the strings 30 from the sound board 40, comprising: a row of guides 112 aligned with each string 30 by an angle 'gamma' set by attachment of the stop bar 100 to the sound board 40.

Figure 2 and Figures 6, 7, and 8 also show the stop bar 100 according to the invention arranged to attach to a sound board 40 of a stringed musical instrument to guide strings 30 of the instrument anchored to the stop bar 100 in a straight line from an anchor 114 to a saddle 22 which separates the strings 30 from the sound board 40, comprising: a row of guides 112 aligned with each string 30 by an angle 'beta' set by attachment of the stop bar 100 to the sound board 40.

Figure 2 and Figures 6, 7, and 8 also show the stop bar 100 according to the invention arranged to anchor musical strings 30 to the sound board 40 of a stringed musical

instrument comprising the saddle 22 fixed to the sound board, comprising: a row of guides 112 in register with anchors 114 to guide the strings 30 from the anchors 11 at angles 'beta' with respect the sound board 40 which are straight from anchor to support on the saddle. The angle 'gamma' between the guides 112 and the flat surface 119 on the stop bar 100 is the same as the angle 'beta'.

Each straight tube which forms a guide 112 is arranged to guide a string 30 in a straight line from the point 114 where the string is anchored to the stop bar 100 to the crest of a saddle 22 fixed to the sound board 40.

The row of guides 112 is arranged guide the strings 30 in parallel lines at an angle 'gamma' with respect to the sound board 40 which the same as the angle 'beta' of the guide 112 with respect to the flat surface 119.

The flat surface 199 is arranged to adhere the stop bar 100 to the sound board 40. In an embodiment not shown the stop bar comprises a groove to receive in a tongue on the sound board.

The stop bar 10 is arranged to be joined to the sound board so that the strings are perpendicular to the row of guides.

A method of attaching the strings 30 to the musical instrument is possible with a stop bar according to the present invention. The stop bar is in the form of an elongate bar for joining to a sound board of the instrument comprising a plurality of string anchors 114 corresponding to each musical string 30 of the instrument for anchoring each string in line with the crest of the saddle 22 fixed to the sound board 40.

The method of anchoring a musical string to a sound board of a musical instrument maybe adapted so the string is guided through an angle 'beta' to the sound board of between 1 and 89 degrees by threading the string through the guide 112 in the form of a straight tube in a stop bar of the invention 100 fixed to the sound board 40. The string is pulled in a straight line from the anchor 114 location through the tube 112 to the saddle 22, which supports the string 30, fixed to the sound board 40 by the stop bar 100.

The invention has been described by way of examples only. Therefore, the foregoing

is considered as illustrative only of the principles of the invention. Further, since numerous modifications and changes will readily occur to those skilled in the art, it is not desired to limit the invention to the exact construction and operation shown and described, and accordingly, all suitable modifications and equivalents may be resorted to, falling within the scope of the claims.

Claims:

1. A stop bar arranged to attach to a sound board of a stringed musical instrument and to guide strings of the instrument, said strings are anchored to the stop bar at a first location and pass through guides formed in the stop bar so that a string defines a straight line from the first location to a saddle which separates the strings from the sound board.
2. A stop bar according to claim 1 wherein each guide is formed by a guide hole straight through the bar.
3. A stop bar according to claims 1 or 2 wherein each guide is arranged to align with the straight line by attachment of the stop bar to the sound board.
4. A stop bar according to claim 3 wherein attachment of the bar to the sound board aligns each guide at an angle relative to the sound board of between 1 degree and 89 degrees.
5. A stop bar according to claim 4 wherein attachment aligns each guide at an angle relative to the sound board of between 5 degrees and 35 degrees.
6. A stop bar according to claim 5 wherein attachment aligns each guide at an angle relative to the sound board of between 10 degrees and 20 degrees.
7. A stop bar according to claim 6 wherein attachment aligns each guide at an angle relative to the sound board of 16 degrees.
8. A stop bar according to any one of claims 4, 5, 6, or 7 wherein all guides are set the same angle in the stop bar.
9. A stop bar according to any preceding claim comprising the saddle.
10. A stringed musical instrument comprising a stop bar according to any preceding claim.
11. A stop bar for a stringed musical instrument substantially as described herein with reference to the accompanying drawings.

AMENDMENTS TO CLAIMS HAVE BEEN FILED AS FOLLOWS

Claims:

1. A stop bar arranged to attach to a sound board of a stringed musical instrument and to guide strings of the instrument, said strings are anchored to the stop bar at a first location and pass through guides formed in the stop bar so that a string defines a straight line from the first location to a saddle which separates the strings from the sound board.
2. A stop bar according to claim 1 wherein each guide is formed by a guide hole straight through the bar.
3. A stop bar according to claims 1 or 2 wherein each guide is arranged to align with the straight line by attachment of the stop bar to the sound board.
4. A stop bar according to claim 3 wherein attachment of the bar to the sound board aligns each guide at an angle relative to the sound board of between 1 degree and 89 degrees.
5. A stop bar according to claim 4 wherein attachment aligns each guide at an angle relative to the sound board of between 5 degrees and 35 degrees.
6. A stop bar according to claim 5 wherein attachment aligns each guide at an angle relative to the sound board of between 10 degrees and 20 degrees.
7. A stop bar according to claim 6 wherein attachment aligns each guide at an angle relative to the sound board of 16 degrees.
8. A stop bar according to any one of claims 4, 5, 6, or 7 wherein all guides are set the same angle in the stop bar.
9. A stop bar according to any preceding claim comprising the saddle.
10. A stringed musical instrument comprising a stop bar according to any preceding claim.
11. A stop bar for a stringed musical instrument substantially as described herein with reference to the accompanying drawings.

Intellectual Property Office

Application No:	GB1516469.2	**Examiner:**	Rianis Dickson
Claims searched:	1-11	**Date of search:**	10 February 2016

Patents Act 1977: Search Report under Section 17

Documents considered to be relevant:

Category	Relevant to claims	Identity of document and passage or figure of particular relevance
X	1, 3-10	JP 2001142455 A (OMORI KUNIHIKO) See Fig.1, Fig.2, Fig.3, translated paragraphs [0008]-[0011]
X	1-10	WO 2011/071552 A1 (CHIU BERNARD et al.) See Fig.6A, paragraph [0098]
X	1-5, 8-10	US 4608906 A1 (TAKABAYASHI YOUJIRO) See Fig.2, Fig.3, Fig.4, column 5 lines 19-21

Categories:

X	Document indicating lack of novelty or inventive step	A	Document indicating technological background and/or state of the art.
Y	Document indicating lack of inventive step if combined with one or more other documents of same category.	P	Document published on or after the declared priority date but before the filing date of this invention.
&	Member of the same patent family	E	Patent document published on or after, but with priority date earlier than, the filing date of this application.

Field of Search:

Search of GB, EP, WO & US patent documents classified in the following areas of the UKC^{X} :

Worldwide search of patent documents classified in the following areas of the IPC

G10D

The following online and other databases have been used in the preparation of this search report

EPODOC, WPI, Internet

International Classification:

Subclass	Subgroup	Valid From
G10D	0003/12	01/01/2006
G10D	0001/00	01/01/2006