Nov. 15, 1955 C. KYLE 2,723,423

NECK AND SHOULDER FORMING APPARATUS FOR MAKING ACOUSTIC DIAPHRAGMS

Filed Nov. 7, 1951 3 Sheets-Sheet 1

FIG. 1

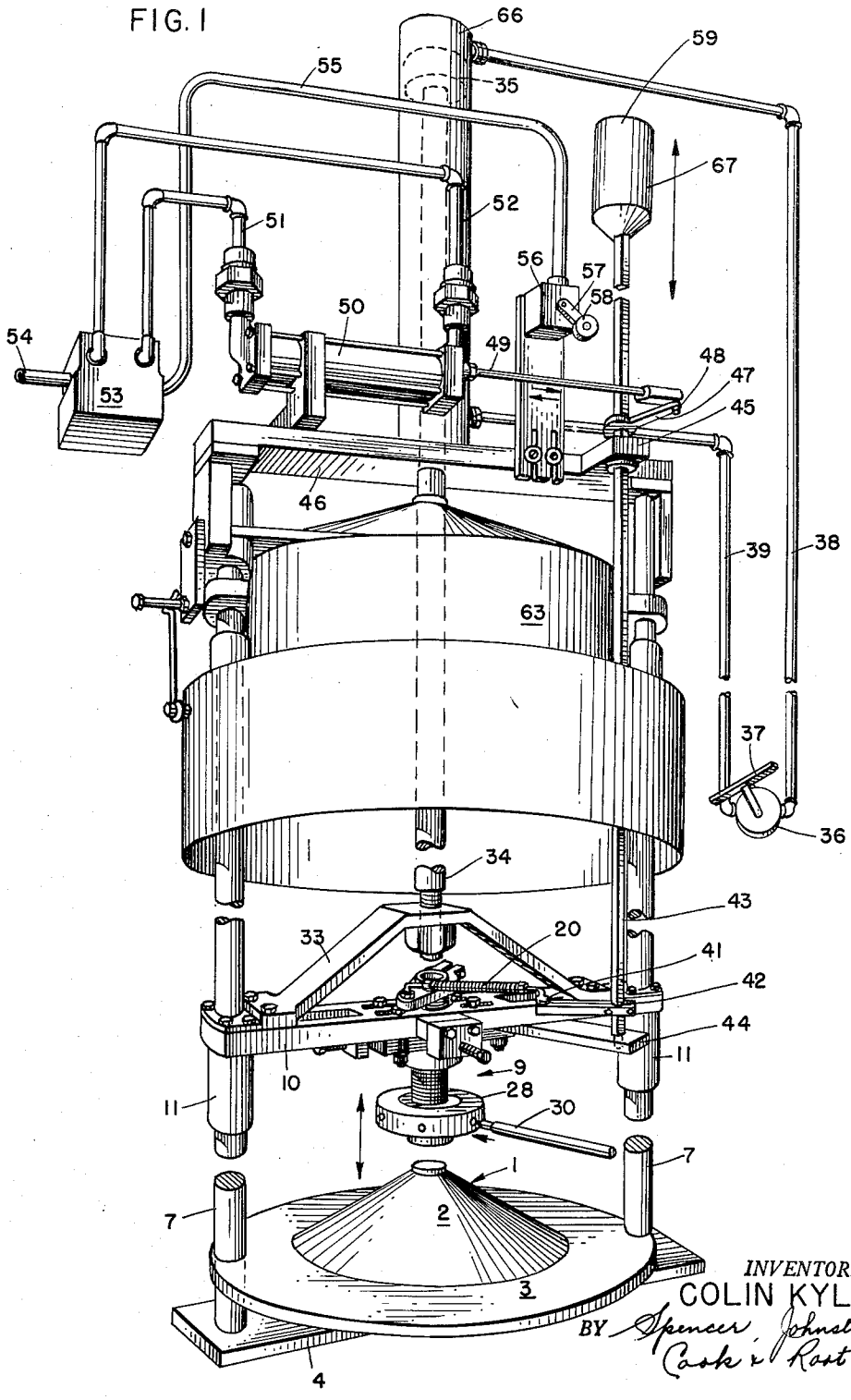

INVENTOR:
COLIN KYLE
BY Spencer, Johnston, Cook & Root

ATT'YS

Nov. 15, 1955 C. KYLE 2,723,423

NECK AND SHOULDER FORMING APPARATUS FOR MAKING ACOUSTIC DIAPHRAGMS

Filed Nov. 7, 1951 3 Sheets-Sheet 2

FIG. 2

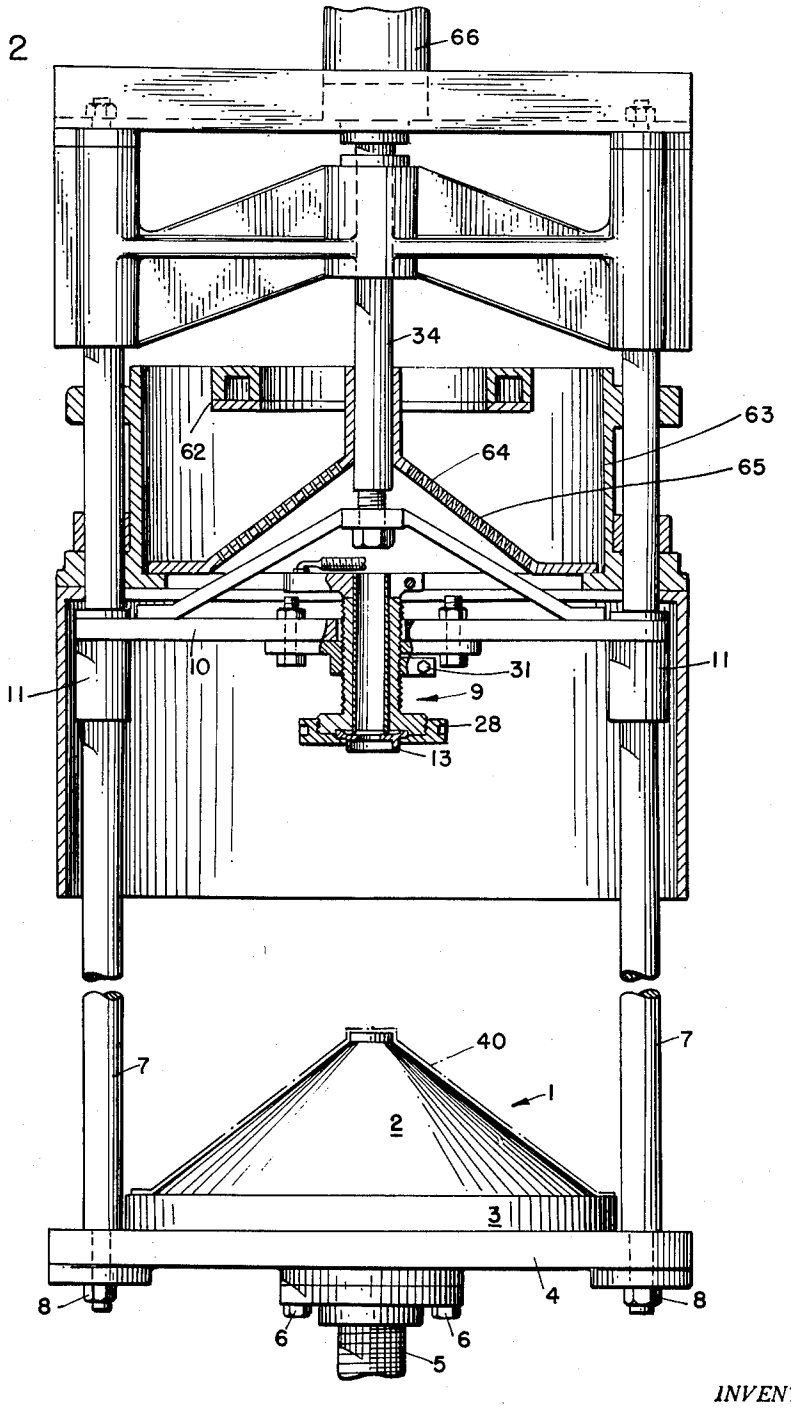

INVENTOR:

COLIN KYLE

BY Spencer, Johnston, Cook & Root

ATT'YS

Nov. 15, 1955 C. KYLE 2,723,423

NECK AND SHOULDER FORMING APPARATUS FOR MAKING ACOUSTIC DIAPHRAGMS

Filed Nov. 7, 1951 3 Sheets-Sheet 3

FIG. 3

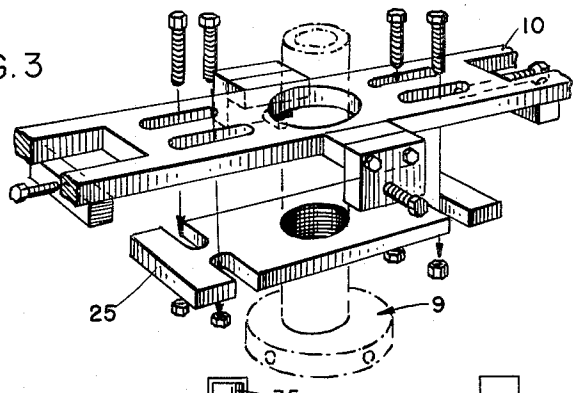

FIG. 4

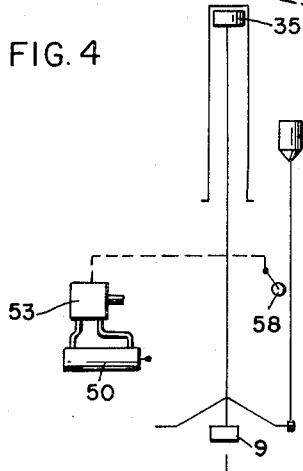

FIG. 5

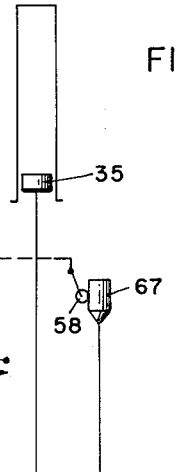

FIG. 6

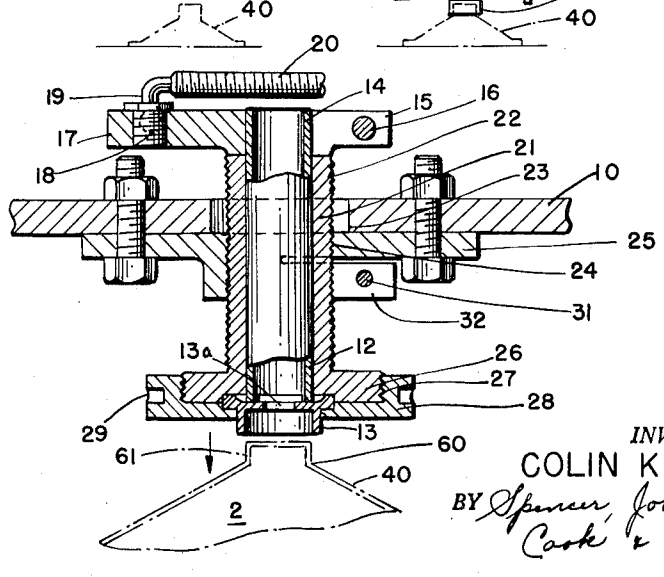

INVENTOR:
COLIN KYLE
BY Spencer, Johnston, Cook & Root
ATT'YS

United States Patent Office 2,723,423 Patented Nov. 15, 1955

2,723,423

NECK AND SHOULDER FORMING APPARATUS FOR MAKING ACOUSTIC DIAPHRAGMS

Colin Kyle, Geneva, Ill., assignor to Hawley Products Company, St. Charles, Ill., a corporation of Delaware

Application November 7, 1951, Serial No. 255,205

5 Claims. (Cl. 18—5)

This invention relates to a neck and shoulder forming apparatus for making acoustic diaphragms, more particularly acoustic diaphragms of the seamless type having a neck or flange portion adapted to be adhesively secured to the voice coil of a loudspeaker.

Another object of the invention is to provide a new and improved apparatus for automatically forming said neck and shoulder portion of an acoustic diaphragm. Other objects will appear hereinafter.

These objects are accomplished in accordance with the invention by providing means for supporting an acoustic diaphragm on which a neck and shoulder portion are to be formed, means relatively movable with respect to said supporting means and axially with respect to the neck and shoulder portion of said diaphragm, and forming means associated with said relatively movable means adapted to form said neck and shoulder portion on said diaphragm.

One of the features of the invention is the provision of means for turning the forming means as it engages the apical portion of the diaphragm where the neck and shoulder are to be formed.

Another feature of the invention is the provision of means for automatically actuating said forming means while said movable means is moving axially with respect to the supporting means carrying the diaphragm on which the neck and shoulder portion are to be formed.

Another feature of the invention is the provision of means for simultaneously drying the apical portion of the diaphragm during the neck and shoulder forming operation.

Other features and advantages of the invention will be apparent by reference to the following description in conjunction with the accompanying drawings in which:

Figure 1 represents an elevational view of an automatic neck and shoulder forming apparatus for acoustic diaphgrams illustrating a preferred way of practicing the invention;

Figure 2 is an enlarged portion partly in section of the apparatus shown in Figure 1;

Figure 3 is an exploded view of the parts of the apparatus which make up the means for forming the neck and shoulder portion of the acoustic diaphragm;

Figure 4 is a view illustrating diagrammatically certain elements of the apparatus when the neck and shoulder forming mechanism is in a raised or elevated position with respect to the acoustic diaphragm;

Figure 5 is a view illustrating diagrammatically certain elements of the apparatus when the neck and shoulder forming mechanism is in its forming position; and

Figure 6 is a cross-sectional view of the neck and shoulder forming mechanism.

As illustrated in Figure 1 the diaphragm support member **1** is essentially a male die having the general shape of the acoustic diaphragm on which the neck and shoulder portion are to be formed. In the particular apparatus shown the die or support member **2** is adapted to support an acoustic diaphragm of the general shape shown in

Hawley, U. S. Patent 1,872,583, but it will be understood that the shape of the die member **2** may be varied to accommodate acoustic diaphragms of different shapes. The lower flange of the acoustic diaphragm is adapted to be supported by the lower flange member **3** which may be formed integrally with the male die member **2** or may be fastened thereto in any suitable manner. The supporting assembly **1** is carried on a frame member **4** which is preferably elevated from the floor by a tubular member **5** which is fastened to the floor and bolted to the frame member **4** by means of bolts **6**, **6** as shown in Figure 2.

Vertical guide rods **7**, **7** are threaded at one end and fastened by means of nuts or other suitable fastening means **8**, **8** to the frame member **4**.

The neck and shoulder forming mechanism generally indicated at **9** is carried by a movable carriage or frame **10** which is affixed at opposite ends to sleeves **11**, **11** which in turn are mounted for movement on guide rods **7**, **7**.

The neck and shoulder forming mechanism **9** is made from the parts generally illustrated in Figure 3 and consists of a hollow tubular sleeve member **12** to one end of which is fastened a neck and shoulder forming die **13**. The opposite end **14** of the hollow tubular sleeve member **12** is clamped to a member **15** by means of a clamp screw **16**. The clamp member **15** is provided with a projecting portion **17** having a recess or hole **18** which is adapted to receive a ball pivot member **19** fastened to the end of lever **20**.

The sleeve member **12** is rotatably mounted in another sleeve member **21** which is provided with an external thread **22**. The external thread **22** is adapted to engage with internal threads in a hole **23** formed in frame member **10** and in a hole **24** formed in the neck and shoulder forming frame member **25**.

The lower portion of the threaded member **21** is provided with a flange **26** which is threaded at **27** to engage threads in an annular member **28**. The annular member **28** is provided with a number of peripheral openings or holes **29** which are adapted to receive a wrench **30** as illustrated in Figure 1.

The entire neck and shoulder forming mechanism **9** can be raised and lowered by turning the annular member **28** with the wrench **30**. When the desired setting is obtained the clamp screw **31** in the clamp **32** is tightened so that the threaded member **21** will no longer turn or rotate. However, the sleeve member **12** with its associated neck and shoulder forming member **13** is still free to rotate in response to movement of the lever **20**.

The frame member **10** is fastened in any suitable manner, for example, by bolts to a yoke member **33** which in turn is bolted at its central portion to the lower end of a piston rod **34**. The piston rod **34** is moved axially up and down by air pressure against the piston **35**, the movement being controlled by air introduced through an air valve **36**. The air valve **36** is operated by means of a pedal **37** or other suitable means and serves to provide means for introducing air into conduits **38** and **39**. When the valve is turned to introduce air into conduit **38** the air pressure causes the piston **35** and the mechanism associated therewith to move downwardly. When air is introduced into conduit **39** the air pressure against the lower part of the piston **35** causes the piston and its associated mechanism to move upwardly. In this manner the neck and shoulder mechanism **9** is moved up and down to engage with the acoustic diaphragm **40** (Figure 2) which is carried on the support member **2**.

As previously indicated, an important feature of the present invention is the provision of means for turning the neck and shoulder forming mechanism as it engages the portion of the diaphragm on which the neck and shoulder are to be formed. This turning operation is

accomplished through the lever 20 which is pivotally connected by a ball and socket joint 41 to the lever 42. The lever 42 is fastened by means of bolts to a square rod 43 which is rotatably supported at one end by a support 44 fastened to frame member 10 and is partially supported by an arm 45 fastened to frame member 46. An arm 47 is fastened by means of a set screw or other suitable means to the square rod 43 and is pivotally connected at 48 to a piston rod 49 which in turn is fastened to a piston (not shown) in the air cylinder 50.

The air cylinder 50 is connected by means of conduits 51 and 52 to a double acting solenoid operated air valve 53 which in turn is connected to a source of air supply by a conduit 54. The solenoid or valve 53 is connected by suitable electrical connections carried in conduit 55 to an electric switch generally indicated at 56. The switch 56 is provided with an operating arm 57 on the end of which is a cam roller 58. When the piston 35 descends carrying with it the frame 10 and the square rod 43 the actuating member 59 mounted on the end of the square rod 43 acts as a cam against the cam roller 58 thereby closing the switch 56 and causing the solenoid valve 53 to open and introduce air from conduit 51 through air cylinder 50. The piston in air cylinder 50 then causes piston rod 49 to move axially and turn arm 47 which rotates the square rod 43. As the square rod 43 rotates it moves arm 42 which in turn moves arm 20 and causes the tubular member 12 and its associated forming head 13 to rotate. The cam 59 is so positioned that this rotation occurs just as the member 13 engages the top of the diaphragm 40 and the turning continues for about a quarter of a turn during which time the neck and shoulder forming mechanism moves downwardly over the outer surface of the diaphragm 40 to form a shoulder 60 and a neck 61 adapted to receive the voice coil of a loudspeaker.

The neck and shoulder forming die 13 is heated by means of hot air which is produced by a circular gas burner 62 in a manifold 63 provided with a diffusing baffle 64 having a large number of perforations or holes 65. The hot air produced by the burner 62 passes through the holes 65 and thence through the interior of the tubular member 12 and the hole 13*a* in the neck and shoulder forming die 13. Since the die 13 is preferably formed of a heat conducting material such as metal it will be thoroughly heated. Hence, when it engages the apical portion of the diaphragm and is simultaneously turned the result is an ironing effect which produces a smooth uniform outer surface on the apical portion of the diaphragm and a relatively sharp shoulder 60 on which the voice coil can be seated and aligned without difficulty. The hot air passing through the hole 13*a* assists in drying the apical portion of the diaphragm.

The operation of the apparatus may be summarized briefly as follows:

A diaphragm is accreted from pulp or similar fibrous material onto a porous form, for example, as described in U. S. Patents 1,872,583, 1,952,168, 1,952,169 and 1,984,019, or in any other suitable manner with a neck portion which generally conforms to the desired finished shape of the diaphragm but is relatively rough and unsuited to receive the voice coil of a loudspeaker. The accreted diaphragm while still containing some moisture is transferred to the supporting member 2 of the apparatus herein described. In the first operation of the apparatus the height of the forming die 13 is adjusted by the turning of the annular member 28 with the wrench 30 until the desired height is obtained. The clamp screw 32 is then tightened and the pedal 37 is moved to open the air valve 36 permitting air to enter through cylinder 66 through conduit 38 above piston 35 thereby forcing piston 35 downwardly.

As piston 35 moves downwardly piston rod 34 being fixed to frame 10 causes the latter to move downwardly which in turn causes downward movement of the neck and shoulder forming mechanism generally shown at 9.

Since the arm 44 is also fixed to frame 10 it moves downwardly and carries with it the square rod 43. At a point where the neck and shoulder forming die 13 is about to engage the top of the acoustic diaphragm 40 the cam member 59 engages the cam roller 58 on switch lever 57 thereby closing switch 56 and causing the solenoid valve 53 to admit air from a source of air supply through conduit 54 and conduit 51 to air cylinder 50. The piston in air cylinder 50 moves the piston rod 49 which moves the lever 47 around pivot 48. Lever 47 then turns the square rod 43 which causes the arm 42 to turn and pull the arm 20. As the arm 20 is pulled by the arm 42 it turns the internal sleeve 12 which rotates the neck and shoulder forming die 13. Due to the cylindrical surface 67 of the cam 59 the switch 56 remains closed long enough to permit the desired amount of turning on the die 13.

After the neck and shoulder forming die 13 has reached the desired point in its travel necessary to form the neck and shoulder on the diaphragm the diaphragm is allowed to remain in the apparatus until dry whereupon the air valve 36 is reversed by pushing pedal 37 causing the air to flow through conduit 39 and move the piston 35 upwardly. As the piston 35 moves upwardly the frame 10 and its associated mechanism is carried upwardly. At the same time the cam roller 58 slides off of the cam 59 reversing the switch 56 and causing air to flow through the air solenoid valve 53 and conduit 52 to the opposite side of the piston in air cylinder 50 thus restoring the piston to its initial position shown in Figure 1. The reverse movement of the piston rod 49 also restores the square rod 43 and the elements associated therewith to their initial positions. The diaphragm is then removed from the supporting member 2 and the operation is ready to be repeated.

Figures 4 and 5 illustrate the operation diagrammatically. In Figure 4 the piston 35 is shown at the top of its stroke while in Figure 5 it is shown at the bottom of its stroke. The position shown in Figure 4 is the initial position and that shown in Figure 5 is the operating position of the mechanism.

The invention provides for the first time a method and apparatus for automatically forming a uniform neck and shoulder on an acoustic diaphragm. Since acoustic diaphragms are relatively delicate and uniformity of sound reproduction is one of their essential functions, it is important that they be formed in such a manner as to accomplish this function. The present invention makes it possible to accomplish this by automatic means with a degree of uniformity that cannot otherwise be obtained.

Although the invention is particularly applicable to the manufacture of accreted molded diaphragms of the seamless type it will be understood that it can also be applied in the manufacture of diaphragms that are formed from blanks of paper or other material and which may contain a seam. Although the neck and shoulder portion of the diaphragm are essentially circular in cross-section in order to be adapted to receive the voice coil of a loudspeaker, it will be understood that the invention is not necessarily limited to the manufacture of conical diaphragms. The neck and shoulder portions as herein described may be formed on diaphragms of other shapes, for example, eliptical diaphragms, in which case, however, the supporting member 2 would necessarily have a shape conforming to the shape of the diaphragm.

It will be recognized that other variations and modifications may be made in the apparatus and method described without departing from the invention.

The invention is hereby claimed as follows:

1. An apparatus for forming a neck and shoulder portion of an acoustic diaphragm comprising a diaphragm support member having an apical cylindrical neck portion and adapted to support an acoustic diaphragm, a frame assembly supporting said diaphragm support, a die support member mounted on said frame assembly and rela-

tively movable axially with respect to said diaphragm support member, said die support member housing a die shaped to the desired form of said neck and shoulder portion of said diaphragm, means to move said members one with respect to the other to impress said die upon the apical portion of said diaphragm, cam means, and means actuated by said cam means during axial movement by said die support member to cause said die to rotate about its axis as it is impressed upon said apical portion of said diaphragm.

2. An apparatus for forming a neck and shoulder portion of an acoustic diaphragm comprising a diaphragm support member having an apical cylindrical neck portion and adapted to support an acoustic diaphragm, a frame assembly supporting said diaphragm support, a die support member mounted on said frame assembly and relatively movable axially with respect to said diaphragm support member, said die support member housing a die shaped to the desired form of said neck and shoulder portion of said diaphragm, means to move said members one with respect to the other toward and away from each other to impress said die upon the apical portion of said diaphragm and thereafter to withdraw from said apical portion, and means to rotate said die in said housing during said movement only as it is being impressed on said apical portion, said last named means comprising a cam and means actuated by said cam during axial movement of said die support member and connected to said die to cause said die to rotate a fraction of a turn.

3. An apparatus for forming a neck and shoulder portion of an acoustic diaphragm comprising a diaphragm support member having an apical cylindrical neck portion and adapted to support an acoustic diaphragm, a frame assembly supporting said diaphragm support, a die support member mounted on said frame assembly and relatively movable axially with respect to the neck and shoulder portion to be formed on said diaphragm, a piston rod connected to said die support member and mounted on said frame for moving said die support member axially with respect to said diaphragm support member, a rotatable die mounted on said die support member adapted to form said neck and shoulder of said diaphragm when moved axially into contact with the apical portion of a diaphragm carried on said diaphragm support member, cam means mounted to move with said die support member, and means actuated by said cam means during axial movement of said die support member to cause said die to rotate about its axis as it forms said neck and shoulder portion of said diaphragm.

4. An apparatus for forming a neck and shoulder portion of an acoustic diaphragm comprising a frame assembly, an acoustic diaphragm support member, a die support frame, a heating chamber positioned anteriorly of

the die support frame and surrounding same, said frame assembly supporting the diaphragm support member, the die support frame and said heating chamber, said acoustic diaphragm and said acoustic diaphragm support member having an apical cylindrical neck portion, a fluid driven piston affixed to said die support frame, a hollow tubular die adapted to form a neck and shoulder upon said diaphragm mounted upon said die support frame, means to actuate said piston to cause said die support frame and said die to move axially toward and away from the apical cylindrical neck portion of said diaphragm support member, cam means mounted to move with said die support frame, and means actuated by said cam means during axial movement of said die support frame to cause said die to rotate about its axis as it engages the apical portion of a diaphragm mounted on said diaphragm support member.

5. An apparatus for forming a neck and shoulder portion of an acoustic diaphragm comprising a frame assembly, an acoustic diaphragm support member, a die support frame, and a heating element, said frame assembly supporting the diaphragm support member, the die support frame and the heating element, said acoustic diaphragm and the acoustic diaphragm support member having an apical cylindrical neck portion, said die support frame being affixed to a fluid driven piston and housing a hollow tubular die designed to form a neck and shoulder upon said diaphragm, said die support frame being downwardly rotatably movable with respect to said frame assembly and axially with respect to the neck and shoulder portion to be formed on the diaphragm, cam means movable axially with said die support frame, cam actuating means actuated by said cam means during said movement, said downward movement being imparted to said die support frame by said piston affixed to said frame thereby placing said cam actuating means into operation, said cam actuating means bringing into operation a second source of fluid pressure adapted to rotate the die support frame, said downward and rotating movement causing said die to engage the diaphragm so as to form the diaphragm shoulder, said heating element being positioned anteriorly of the die support and means for circulating heated air into said die to heat the die and to dry the diaphragm neck and shoulder.

References Cited in the file of this patent

UNITED STATES PATENTS

751,300	Kinnard	Feb. 2, 1904
1,122,393	House	Dec. 29, 1914
1,253,316	Weiland	Jan. 15, 1918
1,824,216	Kopp	Sept. 22, 1931
2,332,926	May et al.	Oct. 26, 1943