July 16, 1929. H. HELMEKE 1,721,449

FIRE HOSE NOZZLE HANDLING AND DIRECTING IMPLEMENT

Filed April 12, 1928 2 Sheets-Sheet 1

Fig. 1.

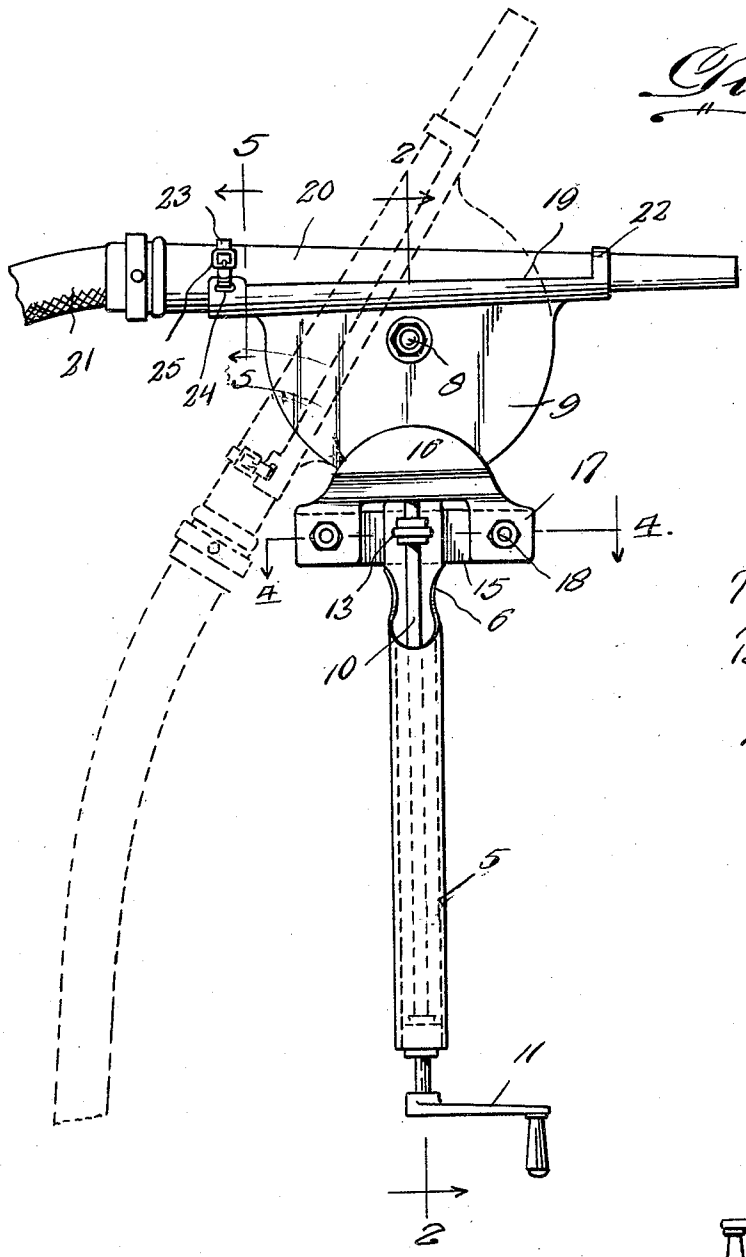

Fig. 2.

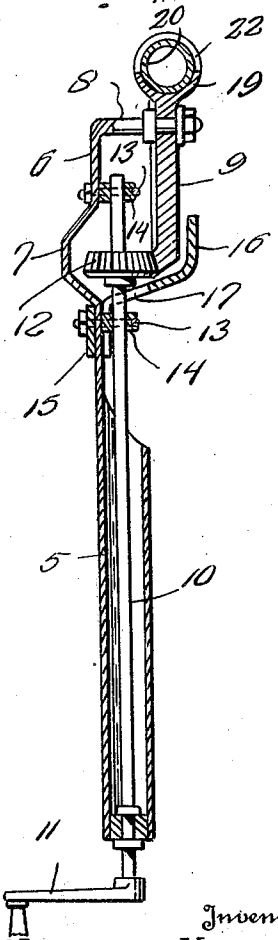

Inventor
Herman Helmeke

By J. Stanley Burch
Attorney

July 16, 1929. H. HELMEKE 1,721,449

FIRE HOSE NOZZLE HANDLING AND DIRECTING IMPLEMENT

Filed April 12, 1928 2 Sheets-Sheet 2

Fig. 3.

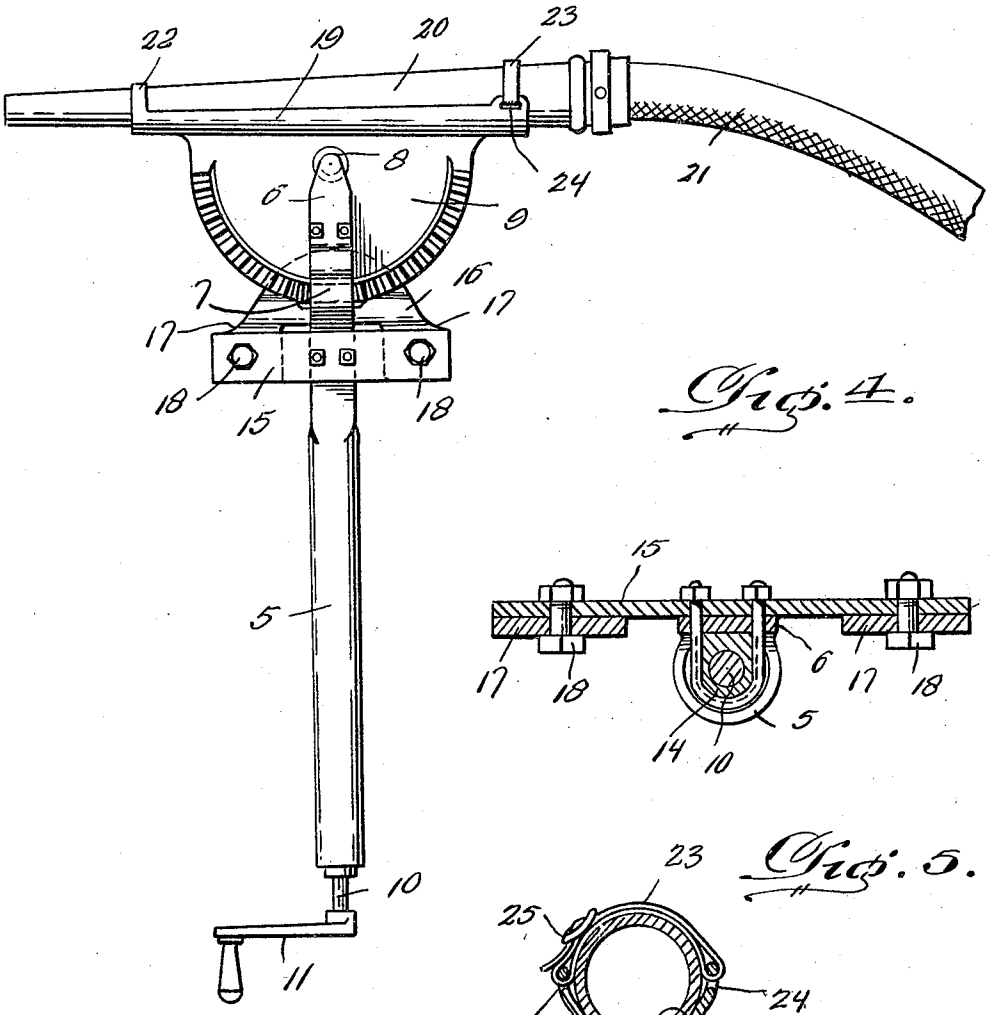

Fig. 4.

Fig. 5.

Inventor

Herman Helmeke,

By J. Stanley Burch

Attorney

Patented July 16, 1929. 1,721,449

UNITED STATES PATENT OFFICE.

HERMAN HELMEKE, OF CHASKA, MINNESOTA.

FIRE-HOSE-NOZZLE HANDLING AND DIRECTING IMPLEMENT.

Application filed April 12, 1928. Serial No. 269,408.

My invention relates to an implement for handling and directing the nozzle of a fire hose in extinguishing a fire in a basement, attic, or the like.

When a fire is encountered in a basement, attic, or the like, the heat is often so intense, or the smoke is often so dense, that it is impossible for the firemen to enter and direct the nozzle of the fire hose toward corners and other inaccessible places for effectively extinguishing the fire.

The primary object of the present invention, therefore, is to provide an implement for handling and directing the nozzle of a fire hose from a point outside the basement or attic after the nozzle is positioned within the basement or attic through a door, window or other opening, whereby the stream of water may be readily directed into corners or the like for safely and quickly extinguishing the fire.

A further object is to provide an implement of the above kind which is light and easy to handle or place in use, simple and durable in construction, and efficient in use.

The invention consists in the novel form, combination and arrangement of parts hereinafter more fully described, shown in the accompanying drawings and claimed.

In the drawings:

Figure 1 is a side elevational view of a fire hose nozzle handling and directing implement embodying the present invention, and illustrating the nozzle operatively associated with the implement.

Figure 2 is a longitudinal section on line 2—2 of Figure 1.

Figure 3 is a view similar to Figure 1, looking at the opposite side of the implement.

Figure 4 is an enlarged transverse section on line 4—4 of Figure 1; and

Figure 5 is an enlarged detail section through the nozzle and the nozzle rest on line 5—5 of Figure 1.

Referring more in detail to the drawings, 5 indicates an elongated staff or handle of hollow or tubular form and provided at one end with a longitudinal side extension 6 having an outwardly offset intermediate portion 7 and a laterally directed inwardly projecting free outer end portion 8 upon the terminal end of which is journaled a segment gear 9.

Extending axially through and journaled in the staff 5 is a shaft 10 having an operating handle or crank 11 on its inner projecting end and having a pinion 12 secured on its outer end portion. The pinion 12 is disposed at the inner side of and meshes with the segment gear 9, the offset portion 7 providing operating clearance for the pinion. Fastened by staples or U-bolts 13 to the inner side of the extension 6 are bearings 14 arranged at opposite sides of the pinion 12 and having the shaft 10 journaled therein.

A cross bar 15 is secured to the outer side of the extension 6 inwardly of the pinion 12 by the inner one of the U-bolts 13, and extending around the inner edge of the segment gear 9 is a guard plate 16 having a pair of laterally directed angular legs 17 secured at their free ends to the ends of the cross bar 15 by bolts 18.

The gear 9 is arranged with its straight untoothed diametric edge outward, and rigid and co-extensive with this edge is a channel-shaped tapered rest 19 for snug reception of the nozzle 20 to which the fire hose 21 is coupled. The rest 19 has an integral cross strap 22 at its narrow end under which the small end of the nozzle is fitted, and the nozzle is held in the rest 19 at the wide end of the latter by a fastening strap 23 which is passed through slots 24 in opposite sides of the rest to form a loop extending over the nozzle and tightened by adjustably buckling the ends of the strap together, as at 25.

In use, the hose is coupled to the nozzle after the latter is secured in the rest 19, whereupon the nozzle is passed through a window or other opening into the basement or attic by using the staff 5 as a handle. The water it then turned on, and by rotating the shaft 10 the gear 9 may be oscillated or turned to direct the stream of water into corners and other inaccessible places to thereby safely and effectively extinguish the fire.

Minor changes may be made without departing from the spirit and scope of the invention as claimed.

What I claim is:

1. A fire hose nozzle handling and directing implement including a tubular staff having a transverse pivot at one end, a shaft journaled in and disposed axially of said staff, a segment gear journaled on said pivot, a pinion on the adjacent end of said shaft meshing with said segment gear, means to attach a fire hose nozzle to said segment gear,

an operating crank on the other end of said shaft, said staff having a longitudinal side extension at one end provided with a laterally directed free end portion forming said pivot.

2. A fire hose nozzle handling and directing implement including a tubular staff having a transverse pivot at one end, a shaft journaled in and disposed axially of said staff, a segment gear journaled on said pivot, a pinion on the adjacent end of said shaft meshing with said segment gear, means to attach a fire hose nozzle to said segment gear, an operating crank on the other end of said shaft, said staff having a longitudinal side extension at one end provided with a laterally directed free end portion forming said pivot, and having an outwardly offset intermediate portion providing clearance for said pinion.

3. A fire hose nozzle handling and directing implement including a tubular staff having a transverse pivot at one end, a shaft journaled in and disposed axially of said staff, a segment gear journaled on said pivot, a pinion on the adjacent end of said shaft meshing with said segment gear, means to attach a fire hose nozzle to said segment gear, an operating crank on the other end of said shaft, said staff having a longitudinal side extension at one end provided with a laterally directed free end portion forming said pivot, a cross bar fastened to said extension inwardly of said pinion, and a guard plate for said segment gear having legs fastened to the ends of said cross bar.

4. A fire hose nozzle handling and directing implement including a tubular staff having a transverse pivot at one end, a shaft journaled in and disposed axially of said staff, a segment gear journaled on said pivot, a pinion on the adjacent end of said shaft meshing with said segment gear, means to attach a fire hose nozzle to said segment gear, an operating crank on the other end of said shaft, said staff having a longitudinal side extension at one end provided with a laterally directed free end portion forming said pivot and bearings for said shaft carried by said extension at opposite sides of said pinion.

5. A fire hose nozzle handling and directing implement including a tubular staff having a transverse pivot at one end, a shaft journaled in and disposed axially of said staff, a segment gear journaled on said pivot, a pinion on the adjacent end of said shaft meshing with said segment gear, means to attach a fire hose nozzle to said segment gear, an operating crank on the other end of said shaft, said nozzle attaching means embodying a channel-shaped rest fixed to and arranged co-extensive with the diametric edge of said segment gear, and means to secure the nozzle in said rest.

In testimony whereof I affix my signature.

HERMAN HELMEKE.