March 2, 1971 R. P. WILKINSON 3,566,572

PREFABRICATED WALL STRUCTURE

Filed Sept. 6, 1968 6 Sheets-Sheet 1

Fig. 1.

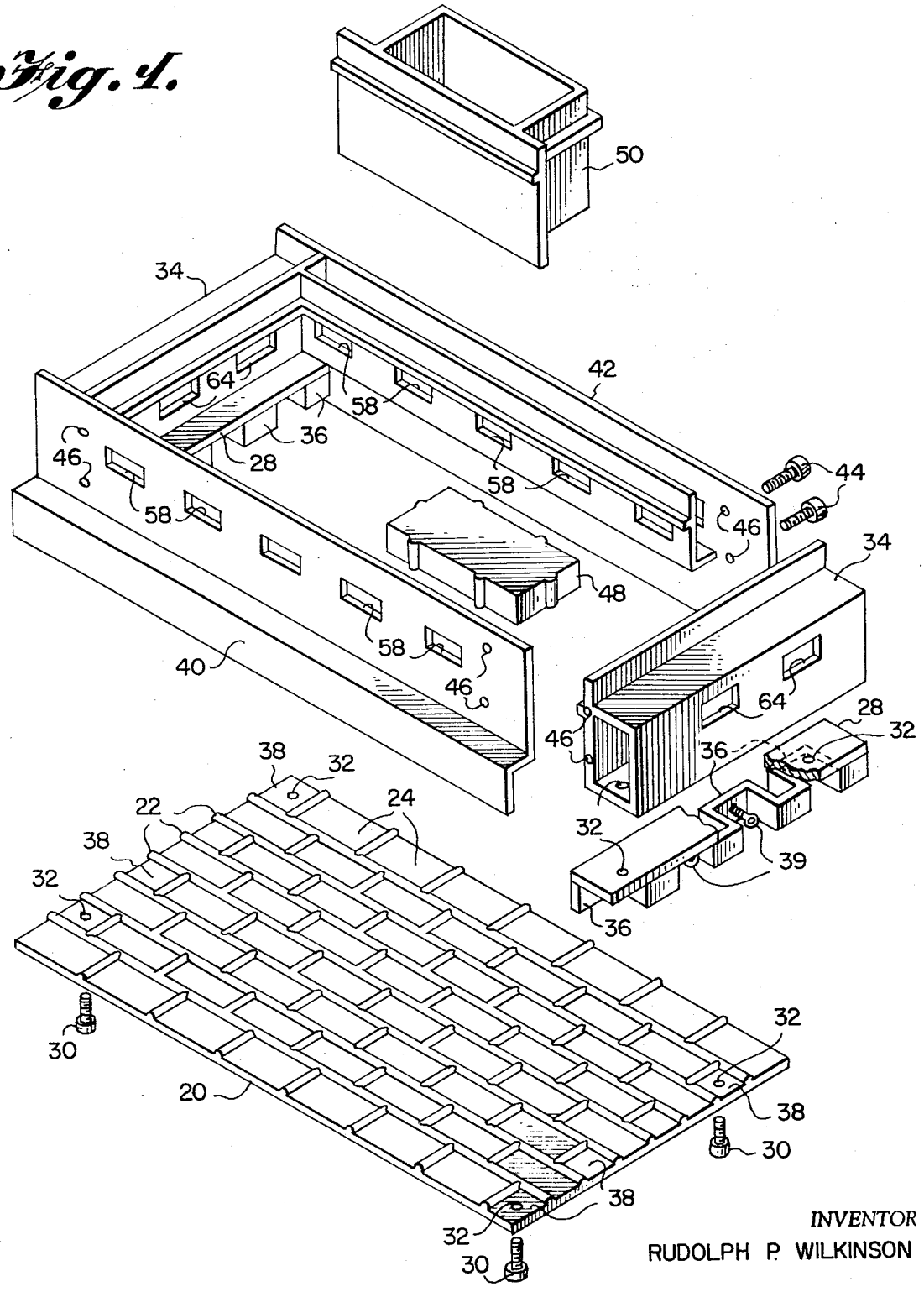

INVENTOR

RUDOLPH P. WILKINSON

March 2, 1971 R. P. WILKINSON 3,566,572

PREFABRICATED WALL STRUCTURE

Filed Sept. 6, 1968 6 Sheets-Sheet 2

Fig. 2.

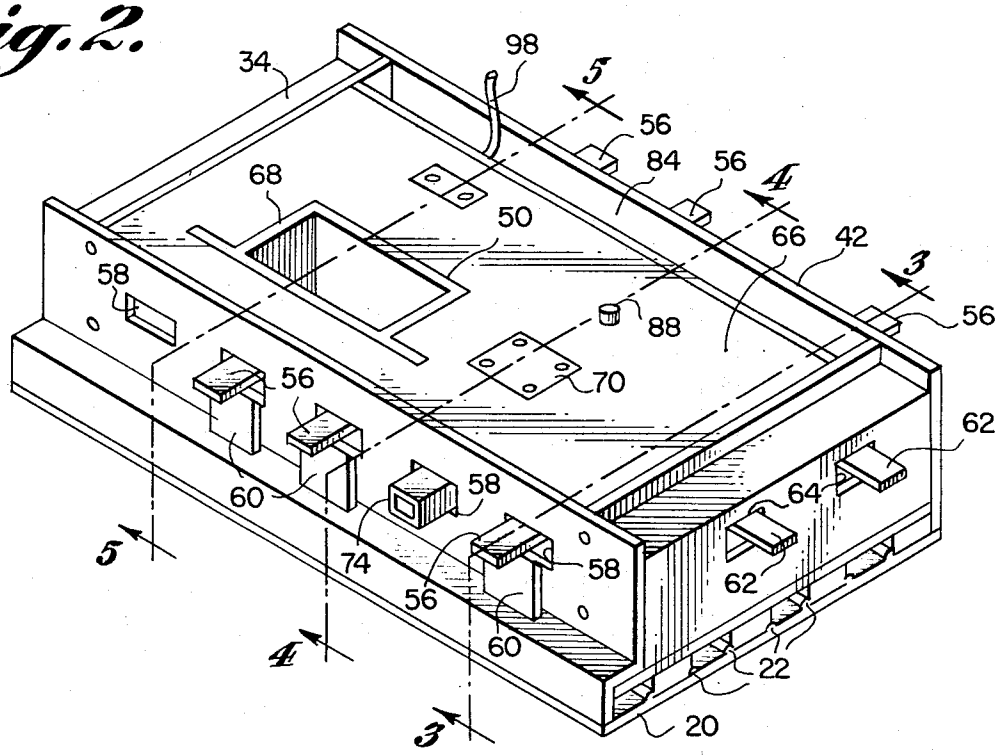

Fig. 3.

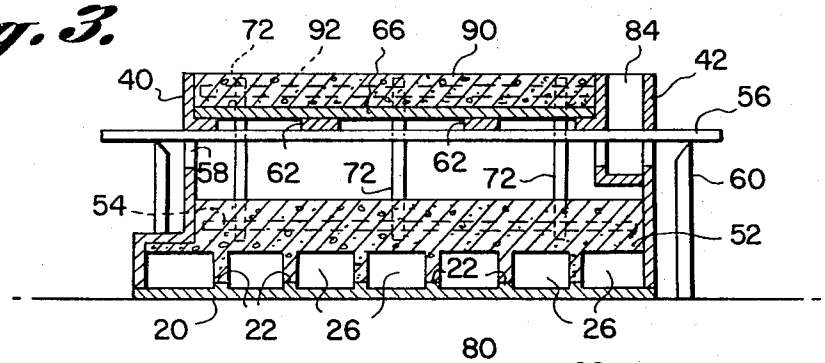

Fig. 4.

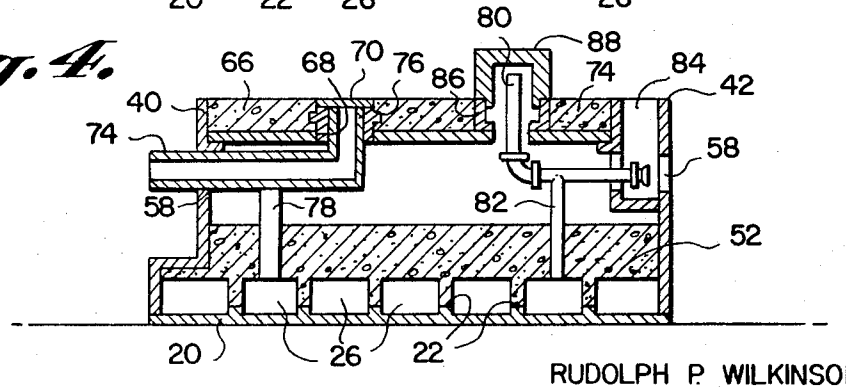

INVENTOR

RUDOLPH P. WILKINSON

March 2, 1971 R. P. WILKINSON 3,566,572

PREFABRICATED WALL STRUCTURE

Filed Sept. 6, 1968 6 Sheets-Sheet 5

Fig. 5.

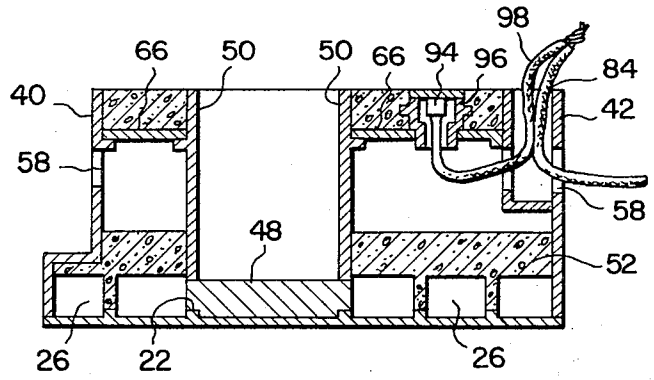

Fig. 6.

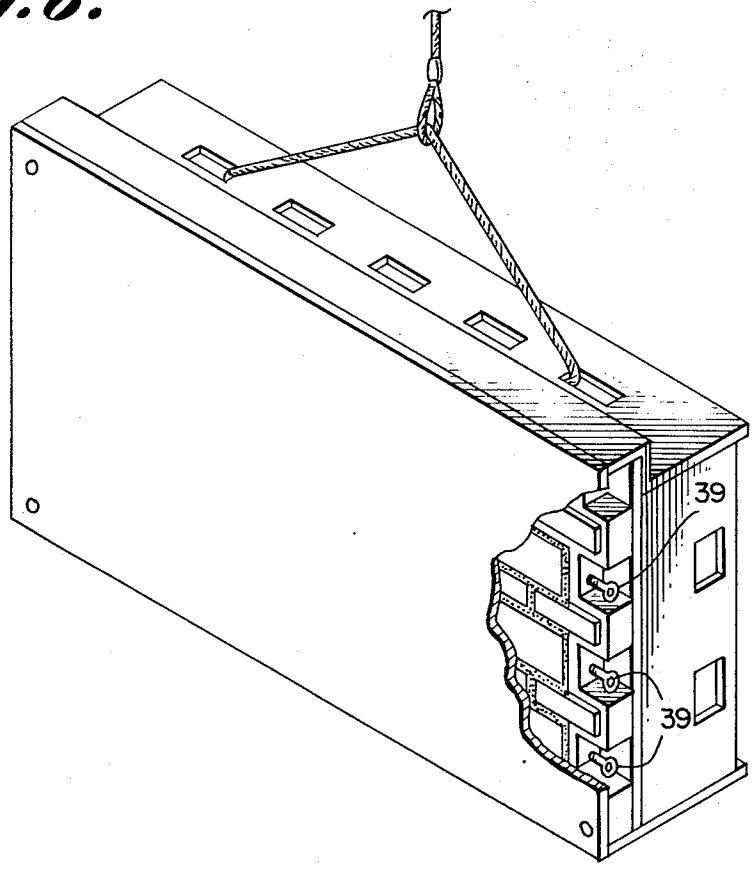

INVENTOR

RUDOLPH P. WILKINSON

March 2, 1971 R. P. WILKINSON 3,566,572

PREFABRICATED WALL STRUCTURE

Filed Sept. 6, 1968 6 Sheets-Sheet 4

Fig. 7.

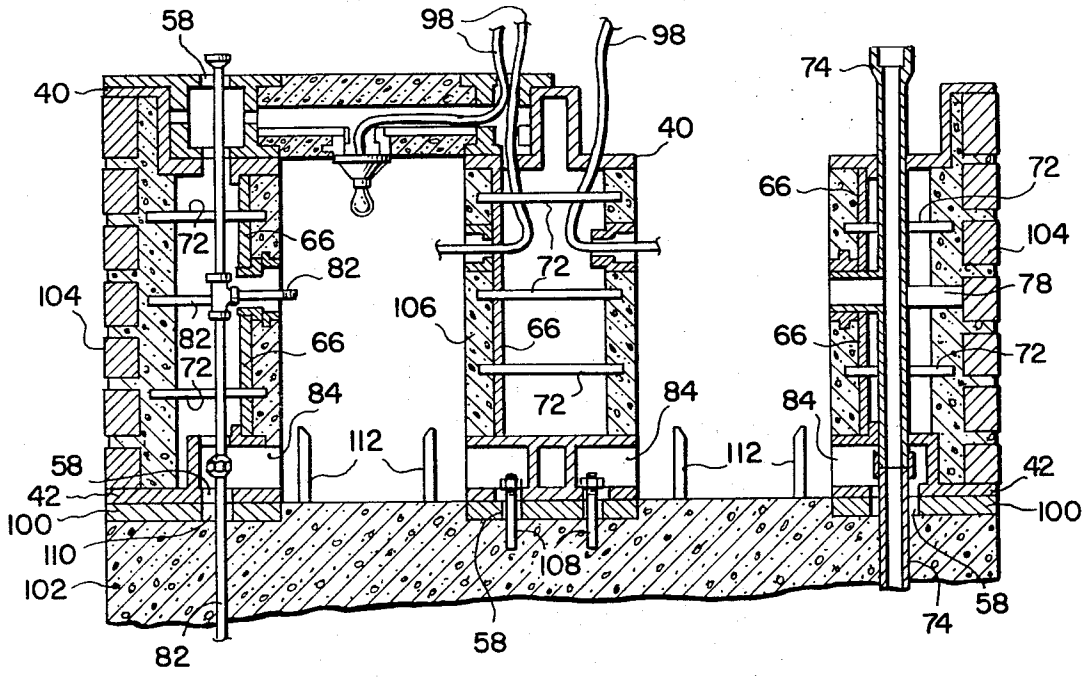

Fig. 8.

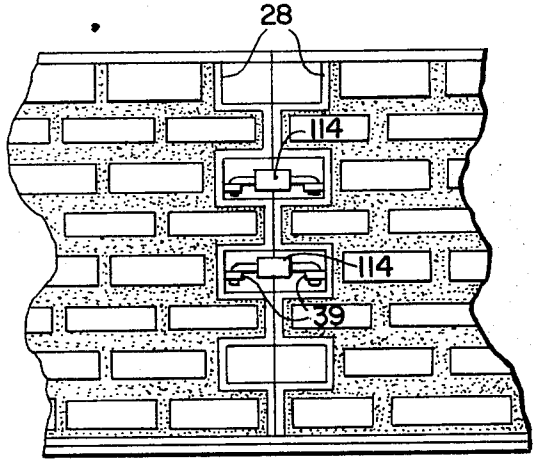

INVENTOR

RUDOLPH P. WILKINSON

March 2, 1971 R. P. WILKINSON 3,566,572

PREFABRICATED WALL STRUCTURE

Filed Sept. 6, 1968 6 Sheets-Sheet 5

Fig. 9.

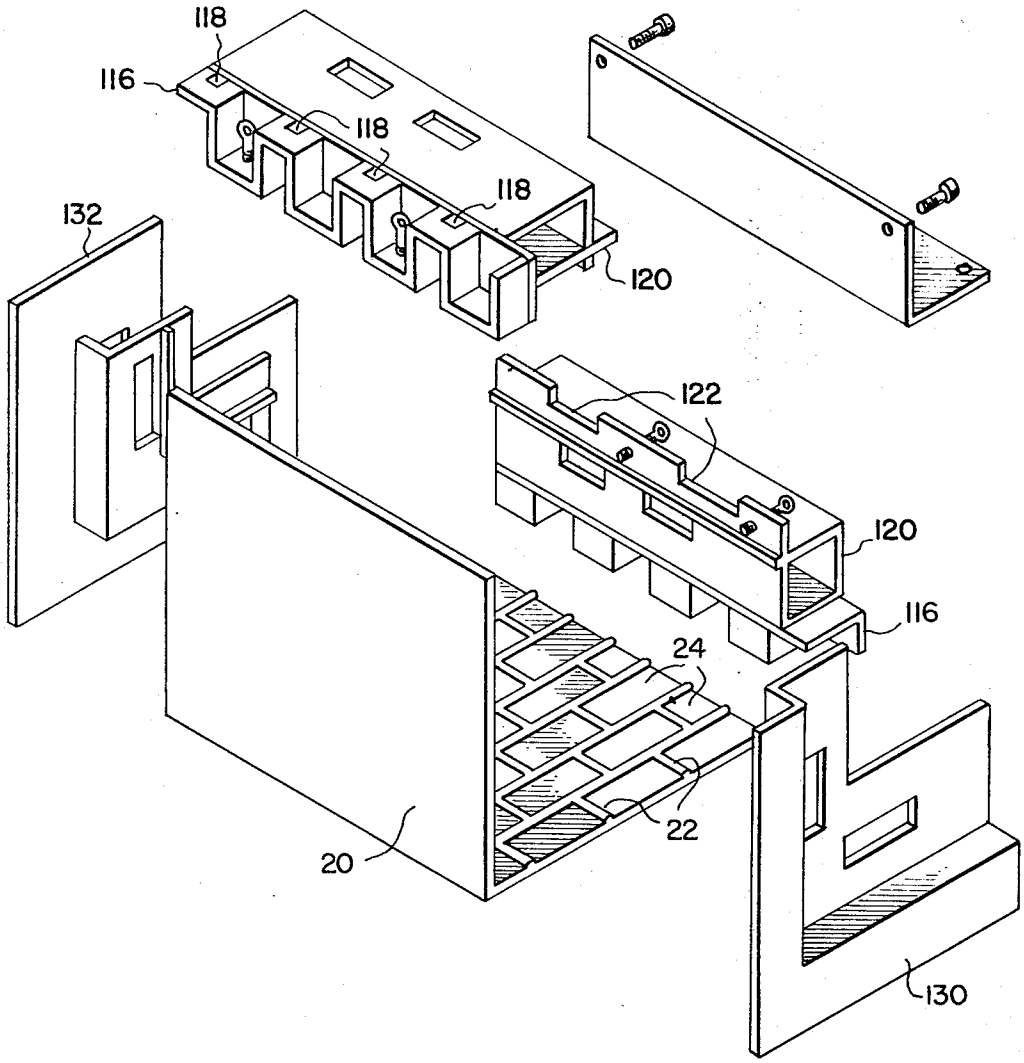

INVENTOR

RUDOLPH P. WILKINSON

March 2, 1971 R. P. WILKINSON 3,566,572

PREFABRICATED WALL STRUCTURE

Filed Sept. 6, 1968 6 Sheets-Sheet 6

Fig. 10.

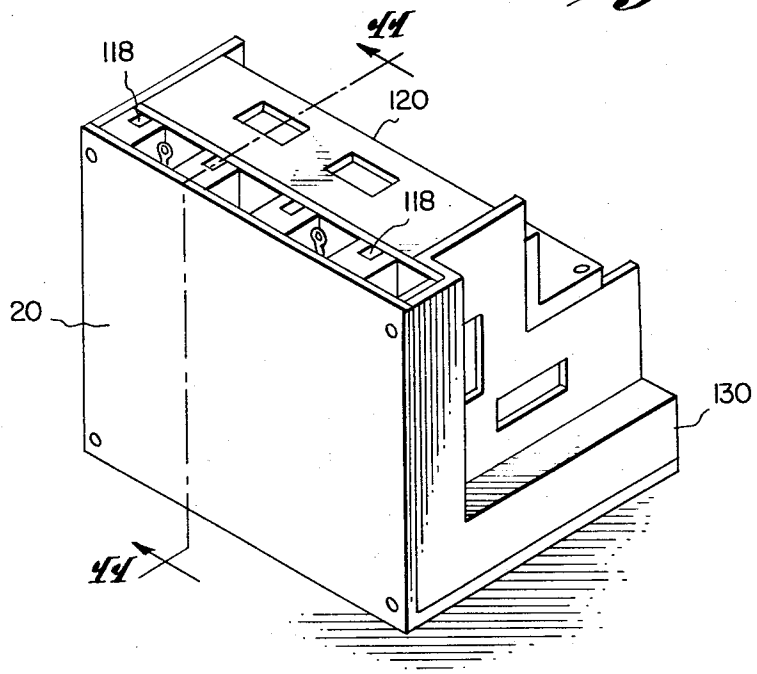

Fig. 11.

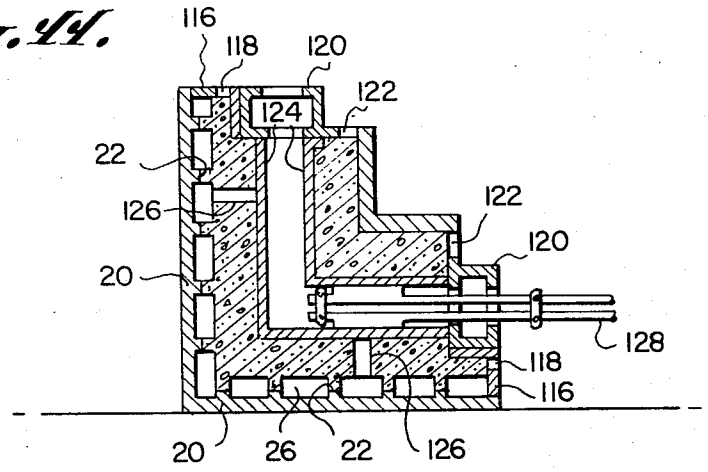

INVENTOR
RUDOLPH P. WILKINSON

United States Patent Office 3,566,572 Patented Mar. 2, 1971

3,566,572

PREFABRICATED WALL STRUCTURE

Rudolph Purifoy Wilkinson, 623 Frensley, Ardmore, Okla. 73401

Filed Sept. 6, 1968, Ser. No. 758,164
Int. Cl. E04b 2/30; E04c 2/06, 2/52
U.S. Cl. 52—745 9 Claims

ABSTRACT OF THE DISCLOSURE

A preformed, hollow wall unit which can be used as a structural form member in a completed building, and a process for making such a wall unit. The wall unit is constructed, for example, of concrete and can be formed, pre-wired, pre-plumbed and brick veneered in a horizontal position prior to being raised into the vertical position.

This invention relates to a construction of prefabricated buildings. More specifically, this invention relates to pre-plumbed, pre-wired, hollow, brick-veneered wall units for use as structural members in prefabricated buildings.

Lift-up construction is a method of building in which walls are pre-formed in a horizontal position and are raised or lifted to a vertical position at their final site. Buildings presently built by lift-up construction techniques have solid walls. As a consequence, insulation, heating, plumbing and electrical wiring must be added after the building framework is assembled in its vertical position. In addition, present methods of forming prefabricated walls for lift-up construction do not permit brick veneering. Furthermore, the form members can not be utilized as structural frame members for the finished building.

The present invention is a form of lift-up construction in which insulation, heating ducts, plumbing, and electrical wiring can be assembled within the preformed walls prior to their being lifted to a vertical position at the ultimate construction site. If desired, a brick veneer can be included in the preformed wall. To form a brick veneer wall in accordance with the present invention, bricks are placed in a spacer board and covered with concrete. Support boards are located above the concrete and support a second layer of concrete, thereby forming a hollow wall unit. Heating ducts, plumbing, and electrical wiring are located within the wall before the second concrete layer is poured. Wall units can then be raised and attached to form the finished building.

These and other aspects and advantages of the present invention are apparent in the following detailed description and claims, particularly when considered in conjunction with the accompanying drawings in which like parts bear like reference numerals. In the drawings:

FIG. 1 is a partially exploded perspective view of the principal components used in one form of the present invention suitable for making preformed walls;

FIG. 2 is a perspective view of the assembled components of FIG. 1;

FIG. 3 is a cross sectional view along plane 3—3 of FIG. 2;

FIG. 4 is a cross sectional view along plane 4—4 of FIG. 2;

FIG. 5 is a cross sectional view along plane 5—5 of FIG. 2;

FIG. 6 is a partial cutaway view of a wall unit being lifted into place;

FIG. 7 is a cross sectional view depicting the arrangement of the principal elements in a multi-story building;

FIG. 8 is an outside partial view of two joined wall units;

FIG. 9 is an exploded view of the principal components used in another form of the invention suitable for making preformed corner wall units;

FIG. 10 is a perspective view of the assembled components of FIG. 9; and

FIG. 11 is a cross sectional view along plane 11—11 of FIG. 10.

The wall form mechanism illustrated in FIGS. 1 through 5 includes brick spacing board **20** which is a large flat surface with raised brick spacers **22** defining brick receptacles **24**. Spacers **22** and receptacles **24** insure proper alignment of bricks **26** on spacing board **20** to form the desired pattern of bricks. Brick end form members **28** are secured on each end of brick spacing board **20** by suitable means such as bolts **30** which are inserted through holes **32** to extend into end wall members **34**. Each end form member **28** includes blocks **36** at the half-brick locations **38** on the end of spacing board **20**. An eye bolt **39** extends outwardly from the two centermost blocks **36**, away from spacing board **20**, and bricks are not inserted into any of the half-brick locations. Head wall member **40** and the foot wall member **42** are secured to the end wall members **34** by suitable means such as countersunk bolts **44** through holes **46**.

To form openings in the walls for windows and doors, a brick omission block **48** is placed on brick spacing board **20**. Above the brick omission block **48** is placed a framing unit **50** which might be either a window framing unit or a door framing unit, as desired. Elements **20–50** are assembled, and bricks **26** placed in each brick receptacle **24**. Concrete **52** is poured on the bricks **26**, and reinforcement rods **54** are placed in the concrete. More concrete is added to fill the spaces between the bricks **26**, binding them to the reinforcement rods **54**, the head wall member **40**, and the foot wall member **42**. The concrete **52** is then leveled.

Wall ties **72**, vertical reinforcement bars **54** and **92** and supporting boards **62** have been omitted from FIGS. 4 and 5 in the interest of clarity. In FIGS. 2 and 4 air conditioning duct **74** extends through the access port **58** and through an opening **68** in the insulating board **66**. Duct **74** is suitably secured to duct framing unit **76** and is supported by the duct support board **78**. The duct framing unit is covered by cover plate **70**. Plumbing pipe **80** is supported by pipe support board **82** so that pipe **80** extends from baseboard access channel **84** through the insualting board **66** at hole framing unit **86**. Pipe **80** terminates beneath cover cap **88**. As depicted in FIG. 5, electrical fixtures such as outlet box **94** may be pre-wired and fitted into an electrical box **96**. The electrical wires **98** then extend through the baseboard access channel **84**.

Support boards **56** are inserted through access ports **58** in the head wall member **40** and the foot wall member **42**. The support boards **56** are held firmly in place by wedge blocks **60**. Support boards **62** are inserted through the access ports **64** in the end wall members **34**. An insulating board **66** is placed above the support boards **62**. Insulating board **66** includes openings such as opening **68** to accommodate framing unit **50**, heat duct framing cover **70**, and plumbing and electrical conduits. Wall tie bars **72** are inserted through the insulating board **66** into the concrete **52** in the outer chamber of the hollow wall. The top chamber of the wall form mechanism is then filled with concrete **90**, and reinforcement bars **92** are placed in the concrete. The concrete is then leveled and allowed to harden. When the concrete is hard, the wedge blocks **60** are removed, allowing the withdrawal of support boards **56** and **62**. After the concrete has hardened and the wall has been erected, the final electrical connections can be made through the baseboard access channel **84**.

Once each wall section has hardened, it is lifted to its vertical position by means such as a crane, as depicted in FIG. 6. The wall sections are positioned on wall guide

bars **100** which are suitably secured in a level position to foundation **102**, as shown in FIG. 7. Brick spacing board **20** is removed, leaving a framed brick veneer hollow insulated wall **104**. For interior building walls on which no bricks are required, a plane spacing board is utilized, and the concrete is poured directly on the board, providing a hollow concrete wall such as interior wall **106**. Pipes **82**, air conditioner ducts **74**, and anchor bolts **108** extend upward from the foundation **102** through access ports **110** in the wall guide bars **100**. The pre-formed, pre-wired, and pre-plumbed hollow walls **104** and **106** are aligned in vertical positions above the wiring and plumbing elements extending upward from the foundation **102** and are lowered into their final position so that access ports **110** in wall guide bars **100** correspond with access ports **58**. The plumbing, heating, and wiring elements from foundation **102** are then joined to their proper counterparts in the walls **104** and **106**, and nuts **111** are tightened on bolts **108**, firmly securing the wall units in place. This joining of the plumbing, heating and wiring is accomplished through baseboard access channels **84**. When all the proper connections are made, baseboards **112** are suitably secured to the walls covering the access channels **84**.

The foot wall members **42** fit above the wall guide bars **100** and are parallel to them. With the foot wall members **42** level and in their final position, the walls **104** and **106** are in a vertical position. In multi-story construction the head wall member **40** also serves as the wall guide bar for the wall and floor elements immediately above.

When the walls are in their final position, eye bolts **39** of the adjacent brick end form members **28** are in adjacent positions, as shown in FIG. 8. Turnbuckles **114** are inserted through the adjacent eye bolts **39** and are tightened to secure adjacent wall sections. Once the walls are secured, bricks, suitably shaped, are placed within the openings to cover the turnbuckles and eye bolts and to cover the wall joints.

The form members used to form corner wall sections are depicted in FIGS. 9, 10, and 11. Each brick corner end form member **116** includes openings **118** to permit concrete to be poured into the outer chamber of the corner form unit. The vertical corner member **120** has notches **122** which permit concrete to be poured into the upper chamber of the hollow wall. The upper and lower chambers are separated by insulating boards **124** which are held in place by insulating supports **126** and a collapsible support **128**. Corner head wall member **130** and corner foot wall member **132** complete the unit. When the concrete hardens, the collapsible supports **128** are collapsed and withdrawn from the wall leaving a hollow-walled corner unit ready to be lifted into place.

Although the present invention has been described with reference to preferred embodiments, obviously numerous changes and modifications in the form, construction, arrangement, and combination of the several parts of the lift-up building can be made and substituted for those herein shown and described without departing from the nature, scope, and principle of the invention.

What is claimed is:

1. A process of forming a building structure wall unit comprising the steps of:

(a) assembling a double wall forming member including a horizontal spacing board and relatively thin vertical wall members, each wall member having access openings intermediate its height;

(b) covering the spacing board with concrete to bind together the spacing board and the vertical wall members into a first wall portion;

(c) inserting support boards through said access openings into said wall forming member to extend beyond the wall members and spaced above the concrete;

(d) wedging said support boards against vertical movement;

(e) placing a horizontal insulating board upon said support boards;

(f) covering the insulating board with concrete to bind together the insulatory board and the vertical wall members into a second wall portion spaced above said first wall portion; and

(g) permitting the concrete to harden.

2. The process of claim **1** further comprising the step of placing bricks in a pre-arranged pattern on said spacing board prior to step (b).

3. The process of claim **2** further comprising the step of placing an omission block in said wall forming unit prior to placement of bricks therein to form an opening in the wall.

4. The process of claim **1** further comprising the step of inserting reinforcement rods into the concrete before hardening.

5. The process of claim **4** further comprising the step of inserting tie bars into the concrete to join the first and second wall portions.

6. The process of claim **5** further comprising the step of locating heating ducts, plumbing pipes and electrical cables above said first wall portion prior to step (f).

7. The process of claim **6** further comprising the steps of lifting the wall unit into a vertically disposed orientation, positioning the wall unit on a foundation having heating and plumbing connections corresponding to said heating ducts and plumbing pipes, bolting the wall unit to the foundation, connecting the heating and plumbing connections to the corresponding heating ducts and plumbing pipes, and removing the spacing board.

8. The process of claim **7** in which at least a portion of said wall members include eye bolts extending outwardly away from and parallel with the plane of said spacing board and further comprising the steps of inserting turnbuckles into adjacent eye bolts of adjacent wall units, tightening the turnbuckle to secure the adjacent units, and covering the turnbuckles to complete the brick pattern.

9. The process of claim **8** in which the wall unit is placed upon a previously installed wall unit to form a multi-story building.

References Cited

UNITED STATES PATENTS

1,362,069	12/1920	Witzer	52—745
1,562,707	11/1925	Lake	264—253
1,809,504	6/1931	Carvel	52—745
2,413,990	1/1947	Muntz	52—584
2,611,262	9/1952	Dodson et al.	52—584
2,630,615	3/1953	Moore	264—253
2,825,221	3/1958	Brouk	264—261

FOREIGN PATENTS

147,328	6/1949	Australia	264—256

HENRY C. SUTHERLAND, Primary Examiner

U.S. Cl. X.R.

52—173, 220; 264—35, 253