July 24, 1934. W. F. MOELLER 1,967,717

PROCESS FOR PURIFYING LIQUEFIED GASES

Filed April 23, 1932 2 Sheets-Sheet 1

Fig. 1

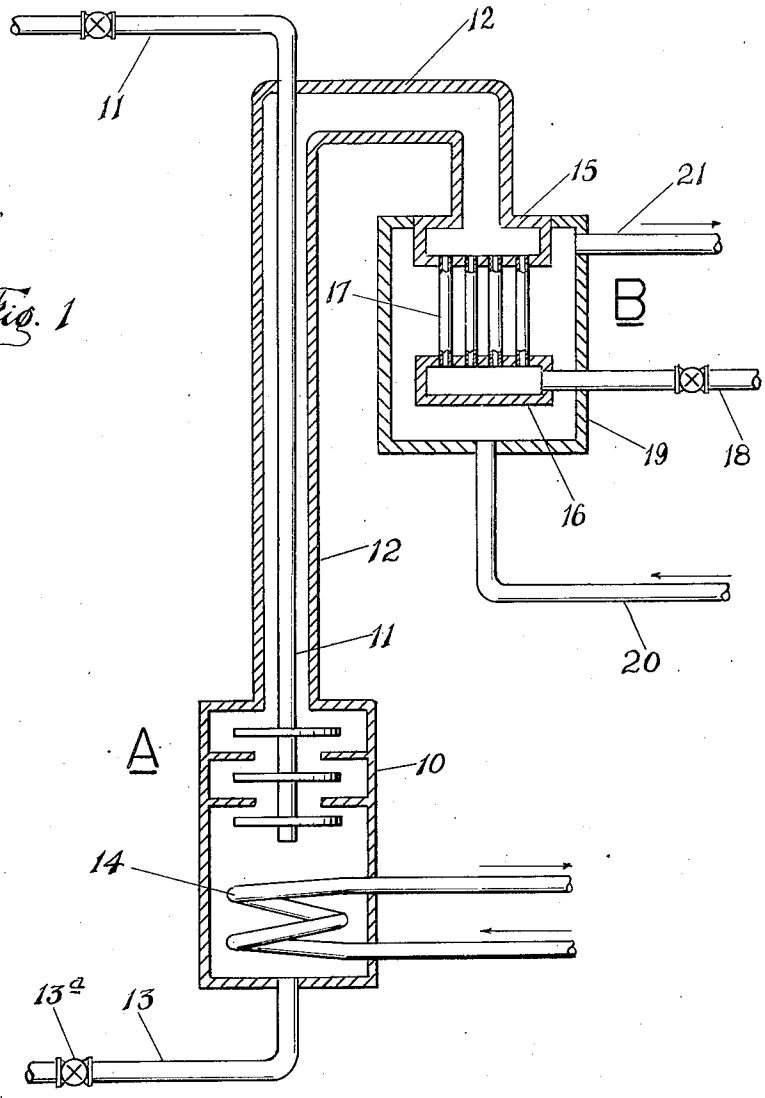

INVENTOR

BY Walter F. Moeller

Watson, Bristol, Johnson & Leavenworth

ATTORNEYS

July 24, 1934. W. F. MOELLER 1,967,717

PROCESS FOR PURIFYING LIQUEFIED GASES

Filed April 23, 1932 2 Sheets-Sheet 2

Fig. 2.

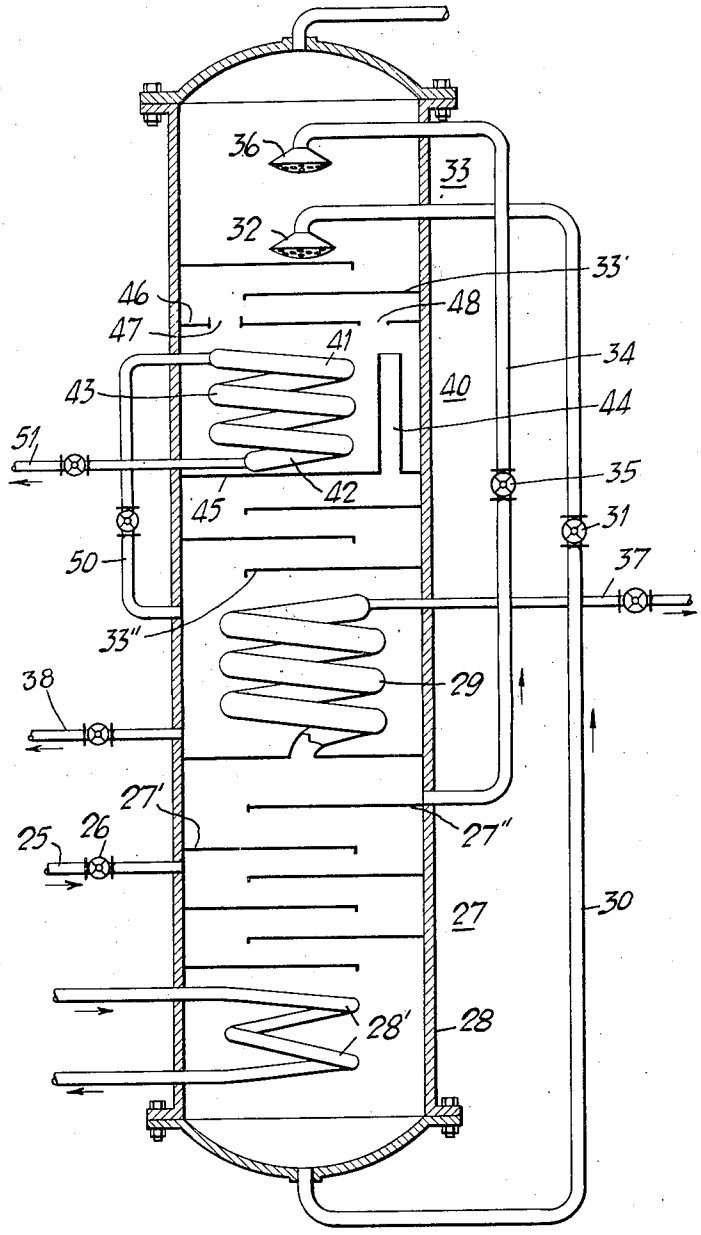

INVENTOR

Walter F. Moeller

BY

Watson, Bristol, Johnson & Leavenworth

ATTORNEYS

Patented July 24, 1934 1,967,717

UNITED STATES PATENT OFFICE

1,967,717

PROCESS FOR PURIFYING LIQUEFIED GASES

Walter F. Moeller, Buffalo, N. Y., assignor, by mesne assignments, to The Linde Air Products Company, New York, N. Y., a corporation of Ohio

Application April 23, 1932, Serial No. 607,032

4 Claims. (Cl. 202—51)

This invention relates to a process and apparatus for purifying liquefied gases, particularly liquefied gases having low boiling points, such as liquid oxygen, nitrogen, and the like, which are produced in a manufacturing cycle, where they are generally contaminated with undesirable impurities and has for its main object an improved procedure whereby such impurities are readily and expeditiously removed.

More specifically, the invention relates to the provision of suitable steps for concentrating undesired impurities occurring in the production of liquefied gases of the character indicated in a manner in the cycle of production such that the impurities may be separated readily by mechanical means, whereby a gas product is finally obtained in the liquid phase from which substantially all impurities are practically completely removed.

Another object is to produce a liquefied gas in a purified condition with an expenditure of a relatively small amount of additional energy and at relatively little additional cost.

Still another object is to separate the desired liquefied gas from the undesired impurity by the step either of partial evaporation or partial condensation and thereafter causing the gas material to revert to the liquid phase with an expenditure of a relatively small amount of energy.

Other objects of the invention will in part be obvious and will in part appear hereinafter.

The invention accordingly comprises the several steps and the relation of one or more of such steps with respect to each of the others, and the apparatus embodying features of construction, combinations of elements and arrangement of parts which are adapted to effect such steps, all as exemplified in the following detailed disclosure, and the scope of the application of which will be indicated in the claims.

For a fuller understanding of the nature and objects of the invention reference should be had to the following detailed description taken in connection with the accompanying drawings, in which:

Fig. 1 is a view mainly in vertical cross section showing a simple form of apparatus adapted for carrying out the process of the present invention; and

Fig. 2 is a view mainly in vertical section showing a gas production apparatus incorporating purifying apparatus arranged for the practice of the present invention.

In the production of a purified liquefied gas from which undesirable impurities are substantially completely removed, the purification may be accomplished with the expenditure of relatively little energy by taking the gas material in the liquid phase and treating it by the step of partial evaporation to produce two phases and then separating the phases. Such a process is generically set forth in the copending application filed in the name of Lawrence J. Bowditch on April 23, 1932, Serial No. 607,074, where it is proposed to remove those impurities which occur in relatively small amounts in liquefied gases such as liquid air, oxygen, carbon dioxide, and the like, the concentration being such that they do not materially change the boiling point of the liquefied gas, but are otherwise objectionable and impair the commercial qualities of the gas product.

There are certain types of impurities commonly incorporated with the gas material, on account of the source from which the gas is obtained and on account of the manufacturing steps commonly employed, which are less volatile than the gas material, i. e. have melting points materially above the boiling point of the gas material. To accomplish the removal of such impurities, it is proposed to bring the gas material containing the undesired impurity in a single phase by the step of fractioinal evaporation or condensation under conditions of temperature and pressure where the vapor pressure of the impurity is of a negligible value. Two phases are thus produced that may be separated physically while the impurities remain in the liquid or solid phase.

Here it is proposed to practice these steps in conjunction with a step of condensation, in order finally to obtain a liquefied gas such as liquid oxygen in substantially pure condition, this step being preferably practiced so as to accomplish the condensation by the utilization of a by-product from another portion of the cycle of production.

Referring now to the drawings, and particularly to Fig. 1, A denotes generally a part of the apparatus into which the gas material in liquid phase that is to be purified is passed and caused to evaporate partially by the application of heat, while B denotes a second part located at such a distance from part A that the vapor pressure of the high boiling point impurity or impurities is negligible serving to condesnse the vapor produced in part A, which is conducted thereto and recondensed by bringing it into thermal contact with a fluid of lower temperature than

the condensing temperature of the gas material being purified.

The vaporizing portion of part A consists of a vessel 10 having an inlet conduit 11 for the liquefied gas, an outlet conduit 12 for the vapor, and a drain conduit 13 with a control valve 13a. In the lower part of vessel 10 is a suitable heating means, for example a coil 14 provided with inlet and outlet connections adapted to be supplied with a heating agent. This agent may be any convenient vehicle that will pass without difficulty at the low operating temperatures here employed, for example, compressed air. In the preferred form of the apparatus, the vapor outlet conduit 12 surrounds the inlet conduit 11 in order to effect heat exchange and separation of the liquid from the gas phase; the vapor thus separated being led from the top of the evaporating vessel 10 over refluxing means to the condenser.

The condenser shown in connection with part B consists of an upper header 15 and a lower header 16 connected by condenser tubes 17. The conduit 12 is here shown as discharging the vapor to be condensed into the upper header 15, while a conduit 18 is connected to the lower header to withdraw the reliquefied gas. The condenser is disposed within a chamber 19 having inlet and outlet conduits 20 and 21, respectively, for the purpose of circulating a cooling medium, for example, liquefied oxygen, or a cold gaseous material that may be a by-product drawn from another part of the manufacturing cycle; the cooling medium carrying away the heat from the condenser so that re-liquefaction is readily accomplished in the condenser.

The operation of the process in the apparatus described is as follows: In previous portions of the manufacturing cycle, certain impurities are not entirely removed and hence appear though in relatively small quantities in the liquefied gas which enters the vaporizer A through conduit 11. The flow of liquid into the vaporizer and the rate at which heat is supplied by the heating fluid passing through the coil 14 are adjusted by the operator to maintain a certain liquid level in the evaporator. The supply of heat causes evaporation of the liquid to occur, but the impurities, which are solid or in solution have a negligible vapor pressure at the temperature of the evaporating liquid, and remain in the liquid and are concentrated at this point in the cycle. The concentrated impurities may be drawn off at will through conduit 13 by means of valve 13a, together with some of the liquefied gas.

The vapor is conducted through conduit 12 into the condenser at its upper header 15 whence it passes into the tubes 17 and is condensed because it loses heat through the tube walls to the fluid of lower temperature surrounding the tubes. The liquefied gas collects in the lower header 16 from which it is withdrawn through conduit 18 in a purified state.

In the modified form of apparatus shown in Fig. 2, a heat interchanger for the manufacture of liquefied oxygen is modified and arranged to separate out the impurities which have relatively high boiling points and are in general inflammable, and then recondense the purified oxygen in order to supply it in the liquid phase. Here a conduit 25 provided with an expansion valve 26 is arranged to supply compressed air drawn from a suitable high pressure source to the rectifying column shown generally at 27. This rectifying column is provided with a kettle or evaporator 28 at its lower end and a condenser 29 at its upper end. A conduit 30 provided with an expansion valve 31 and distributor 32 is arranged to draw liquid from the evaporator 28 and to discharge it into the upper portion of a second rectifying column 33 disposed above the column 27 and arranged to be in heat exchanging relation with the condenser 29. Each of these columns is provided with suitable counter-current contact cooling means, for example, a series of perforated trays, as shown at 27' in the column 27 and at 33' in the column 33. The evaporator 28 associated with the column 27 is provided with suitable heating means, for example a heating coil as shown at 28'.

Within the column 27 is a tray 27'' arranged to collect the condensate which drips from the condenser 29 and to convey the same to a conduit 34 having a controlling valve 35 and a distributor 36 discharging into the top of the column 33, the distributor 36 being preferably disposed above the distributor 32. From the top of the condenser 29 is a gas withdrawal conduit 37 which is arranged for withdrawing non-condensible vapors, while a liquid withdrawal conduit 38 is arranged to withdraw liquid from the base of the column 33 from about the condenser 29.

From this arrangement, it is seen that the compressed air introduced into the column 27 is liquefied by the passage through the expansion valve 26 and through the trays 27'; the liquid collecting in the evaporator 28. Gas or vapor rising through the column 27 passes into the condenser 29 where the less volatile portion is recondensed and produces a reflux in the column 27. Liquid nitrogen collects in the tray 27'', whereas the liquid in the evaporator 28 comprises a relatively large percentage of liquid oxygen. Any non-condensible vapor that is more volatile than liquid nitrogen or oxygen is withdrawn through the conduit 37. Liquefied gas comprising mainly liquid oxygen and the impurities of relatively high melting point are withdrawn through the conduit 30 and introduced into the column 33 through the distributor 32.

In order to effect the final stage of purification, in accordance with the present invention, a second condenser shown generally at 40 is incorporated at a point in the column 33 where the vapor pressure of the undesired impurity is negligible. This condenser comprises upper and lower portions 41 and 42, connected by an intermediate portion 43. One or more passages or flues 44 are associated with the condenser in order to establish communication between the space above the condenser with the space below; a chamber for this condenser being preferably provided in the column by means of a partition 45 disposed transversely in the column below the condenser and a second partition 46, which is disposed above the condenser. This chamber occupies a space normally occupied by refluxing means such as counter-current contact cooling trays, and preferably has trays both above and below the same, those shown below being denoted 33''.

The partition 46 is provided with one or more passages 47 that permits communication with the flues 44 so as to establish communication in the column 33 for the space on the two sides of the condenser chamber containing condenser 40. The partition 46 is also provided with one or more liquid drains 48 which allow liquid to

drain from the partition into the chamber about the condenser 40. Gaseous oxygen to be recondensed and which has been evaporated by the condenser 29 is led from a point near the lower end of the column 33 from the chamber about the condenser 29 by means of a conduit 50 and passed into the portion 41 of condenser 40. Here liquid oxygen collects in a purified state and is withdrawn from the lower portion 42 through a conduit 51.

The operation of this latter form of apparatus is seen to be as follows: The compressed air from which oxygen in the liquid phase and in a purified state is desired to be obtained is introduced into the rectifying column 27 either with or without previous partial purification. This is then passed through the conduit 30, the expansion valve 31 and the distributor 32 into the column 33, where the cooled oxygen condenses out and passes down through the trays 33' and through the drain 48 into the chamber about the condenser 40. When the desired liquid level is attained in this chamber, the cooled liquid overflows through the by-pass 44 into the lower portion of the column 33 over the trays 33'' and finally collects in the chamber about the condenser 29. Here the heat absorbed from the condenser 29 in effecting refrigeration for the column 27 vaporizes a portion of the liquid which is now a high concentrate of liquid oxygen contaminated with the impurities of relatively high melting point. The oxygen vaporized in this chamber is substantially pure oxygen gas which is withdrawn through the conduit 50 and passed into the condenser 40, where it is recondensed by the heat abstracted by the liquid in the chamber about the condenser 40. Thus it is seen that liquefied oxygen in the purified state desired collects in the portion 42 and is withdrawn by the conduit 51.

The liquid which collects in the chamber about the condenser 40 is seen to comprise a mixture of oxygen and nitrogen in the liquid phases, together with any substances that may be present either as solids or in solution. The vaporization which takes place in this chamber is of a fractional nature, the more volatile nitrogen being boiled off and passed up through the flues 47 into the upper portion of the column 33. This liquid nitrogen is seen to be supplied to the column mainly from the conduit 34; thus the cooling of the condenser 40 is seen to be accomplished by means of a cooling agent that is withdrawn from another portion of the cycle of production. The vaporized nitrogen is seen to pass from the top of the column 33 in the usual manner.

The agents here used for heating the liquid in the evaporators and for extracting heat from the vapor in the condensers, in order to conserve energy, are thus with advantage both taken from some other portions of the cycle of production, and since no change has occurred therein other than a change in the quantity of absorbed heat, they may be returned, if desired, to the cycle substantially without loss.

Since certain changes in carrying out the above process and in the constructions set forth, which embody the invention may be made without departing from its scope, it is intended that all matter contained in the above description or shown in the accompanying drawings shall be interpreted as illustrative and not in a limiting sense.

Having described my invention, what I claim as new and desire to secure by Letters Patent, is:

1. The process of removing inflammable impurities from oxygen during the commercial production of liquid oxygen, which process comprises collecting oxygen substantially in the liquid phase and containing the undesired impurity, said impurity occurring in the collected liquid oxygen at a concentration such that the boiling point of the liquid oxygen is not substantially changed thereby and having a melting point materially above the boiling point of liquid oxygen, heating said collected liquid oxygen without substantially changing the attendant temperature and pressure during the entire distillation whereby a gas phase is evolved while the vapor pressure of said impurity remains negligible, separating the gas phase from the liquid phase whereby said impurity remains wholly in the liquid phase, and recollecting, withdrawing and recondensing the gas phase whereby substantially all of the condensate is withdrawn as pure liquid oxygen.

2. The process of removing inflammable impurities from oxygen during the commercial production of liquid oxygen, which process comprises collecting oxygen substantially in the liquid phase and containing the undesired impurity, said impurity occurring in the collected liquid oxygen at a concentration such that the boiling point of the liquid oxygen is not substantially changed thereby and having a melting point materially above the boiling point of liquid oxgen, heating said collected liquid oxygen without substantially changing the attendant temperature and pressure during the entire distillation whereby a gas phase is evolved while the vapor pressure of said impurity remains negligible, separating the gas phase from the liquid phase while maintaining the vapor pressure of said impurity at a substantially negligible value whereby said impurity remains wholly in the liquid phase, collecting and condensing the separated gas in a region at a lower temperature than that to which the collected liquid oxygen is heated, and thereafter withdrawing substantially all of the condensate.

3. The process of removing inflammable impurities from oxygen during the commercial production of liquid oxygen, which process comprises collecting oxygen substantially in the liquid phase and containing the undesired impurity, said impurity occurring in the collected liquid oxygen at a concentration such that the boiling point of the liquid oxygen is not substantially changed thereby and having a melting point materially above the boiling point of liquid oxygen, causing evaporation of said liquid oxygen to take place in a heat exchanger without substantially changing the attendant temperature and pressure during the entire distillation whereby liquid and gas phases coexist therein, refluxing the gas phase with condensate, leading off the washed vapors at a point where the vapor pressure of said impurity is negligible, collecting and condensing said led-off washed vapors at a temperature lower than the liquid oxygen being evaporated, and withdrawing substantially all of the condensate without interference from reflux material.

4. The process of removing impurities from oxygen which occur in small amounts therein when obtained from the atmosphere in the commercial production of liquid oxygen, which process comprises collecting oxygen substantially in the liquid phase and containing the unde-

sired impurity, said impurity occurring in said liquid oxygen at a concentration such that the boiling point of the liquid oxygen is not substantially changed thereby and having a melting point materially above the boiling point of liquid oxygen, bringing said liquid oxygen containing said impurity in a heat exchanger to a temperature and pressure corresponding substantially to a point of the liquid-gas phase equilibrium curve where it remains during substantially the entire distillation while at the same time reducing the vapor pressure of said impurity to a substantially negligible value, adding heat to the introduced oxygen in a manner such that both liquid and gas phases co-exist while said impurity is contained wholly within the liquid phase of the oxygen and the vapor pressure of said impurity remains substantially unaltered, thereafter separating oxygen by the withdrawal of gas material in the gas phase, collecting and condensing the withdrawn material in the gas phase in a region at lower temperature than the temperature to which the liquid oxygen was brought in said heat exchanger, and withdrawing substantially all of the resulting condensate without interference from reflux material.

WALTER F. MOELLER.