Oct. 12, 1926. 1,602,970

J. FISKOW

CLOTHES PRESSING MACHINE

Filed July 14, 1924 7 Sheets-Sheet 1

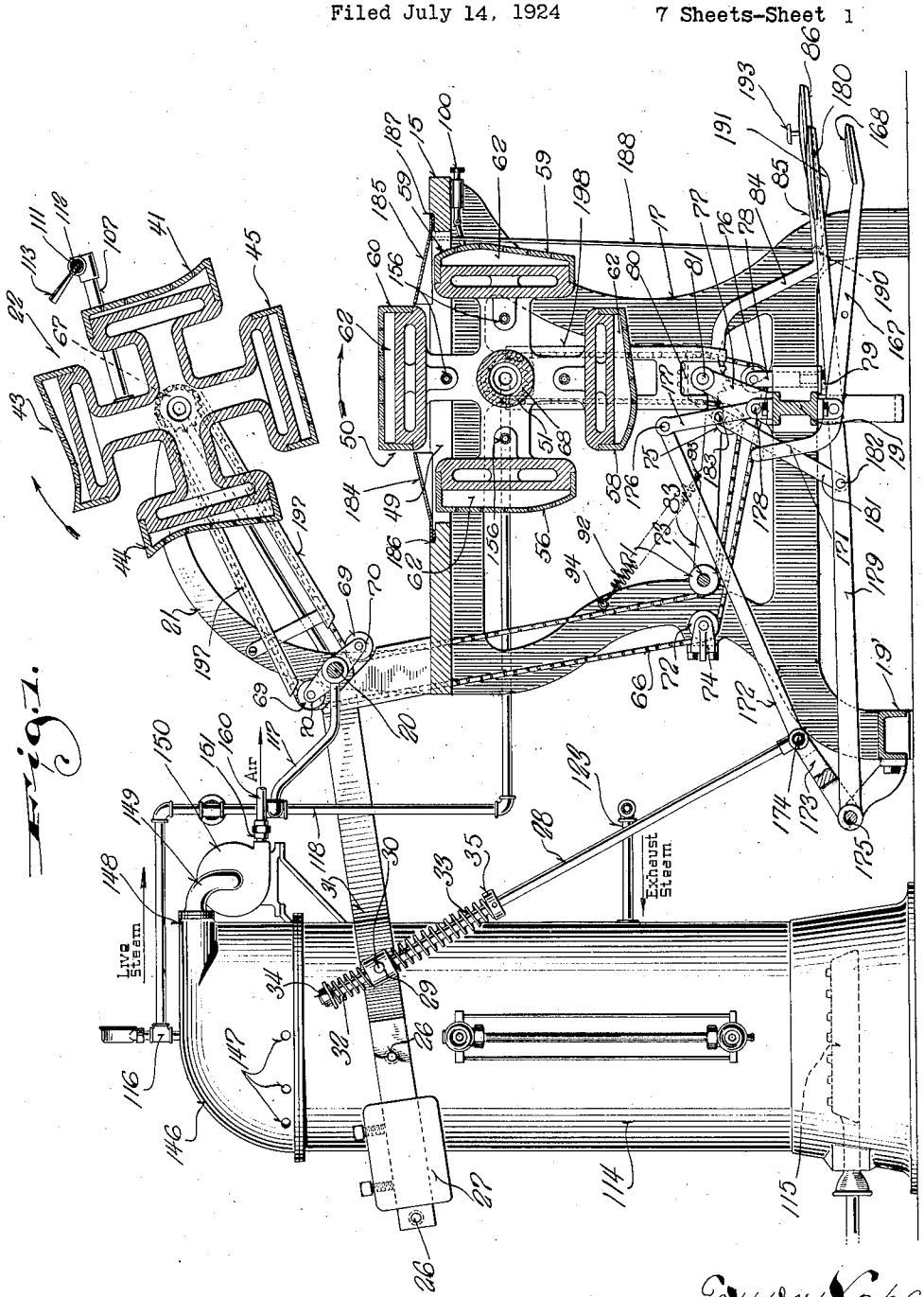

Fig. 1.

Inventor
James Fiskow
By Ira M. Jones.
Attorney

Oct. 12, 1926. 1,602,970

J. FISKOW

CLOTHES PRESSING MACHINE

Filed July 14, 1924 7 Sheets-Sheet 2

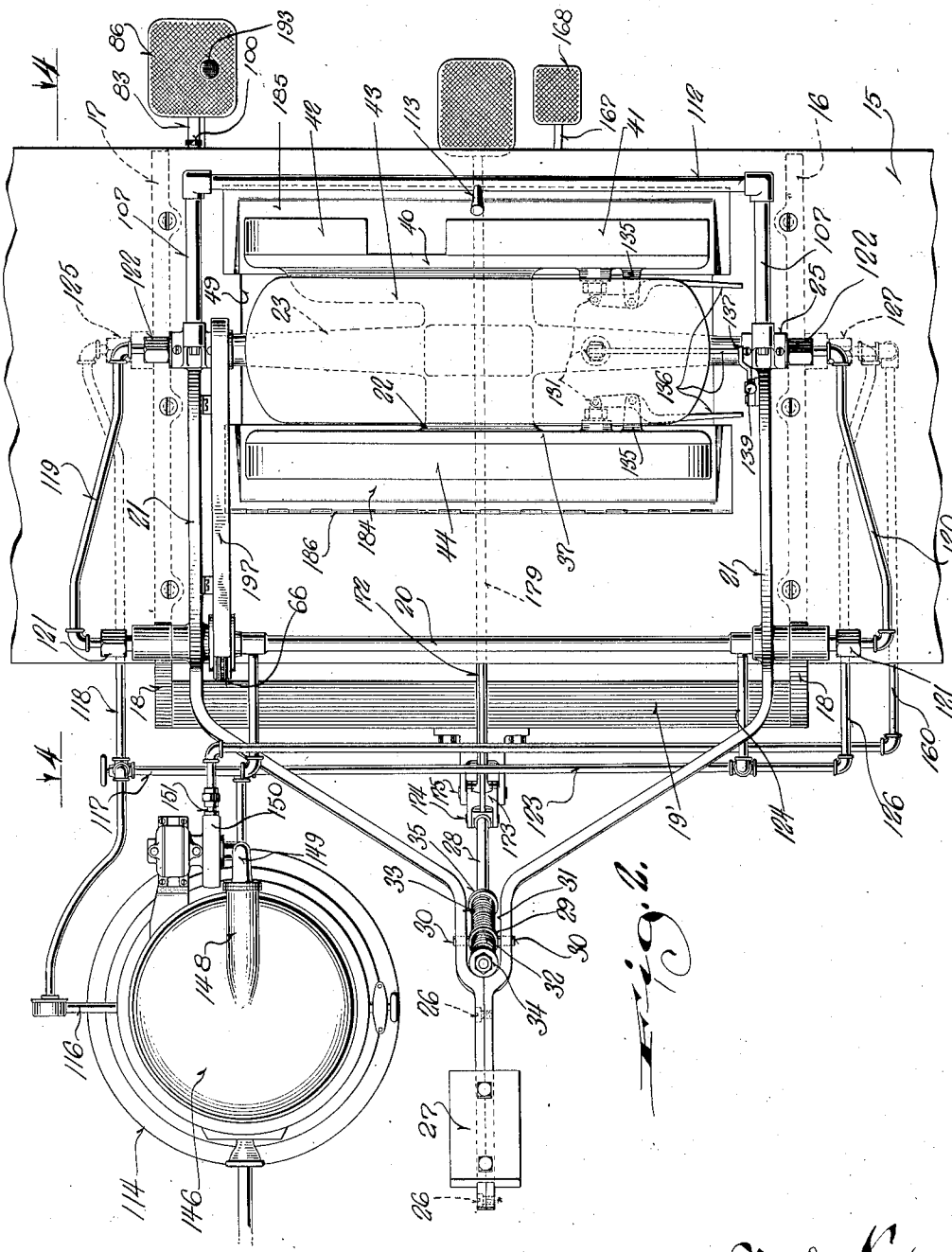

Fig. 2.

Witness:

James Fiskow

By Ira M. Jones.

Attorney

Oct. 12, 1926. 1,602,970

J. FISKOW

CLOTHES PRESSING MACHINE

Filed July 14, 1924 7 Sheets-Sheet 5

Fig. 3.

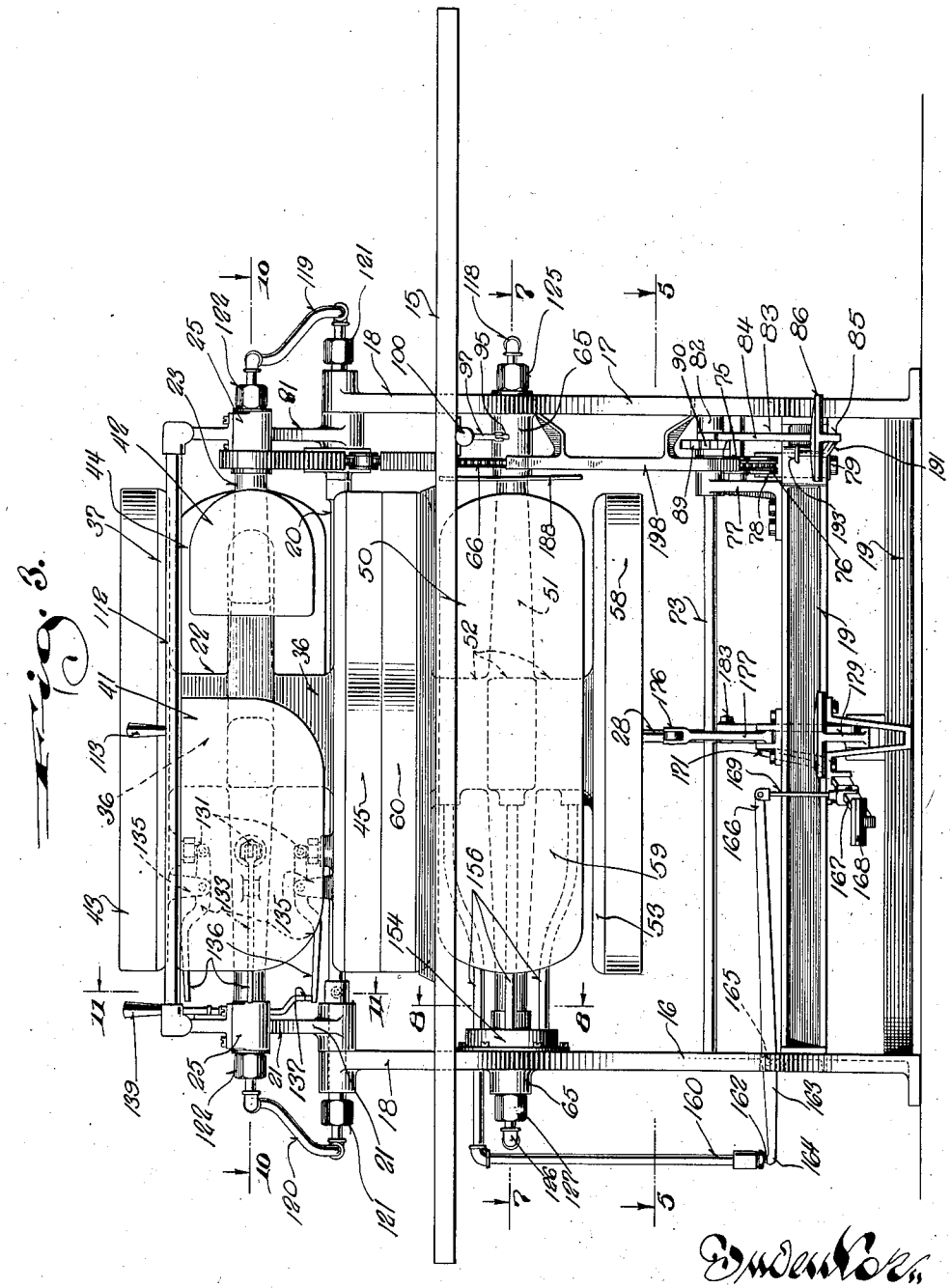

Inventor,
James Fiskow
By Ira M. Jones.
Attorney

Oct. 12, 1926. 1,602,970

J. FISKOW

CLOTHES PRESSING MACHINE

Filed July 14, 1924 7 Sheets-Sheet 4

Fig. 4.

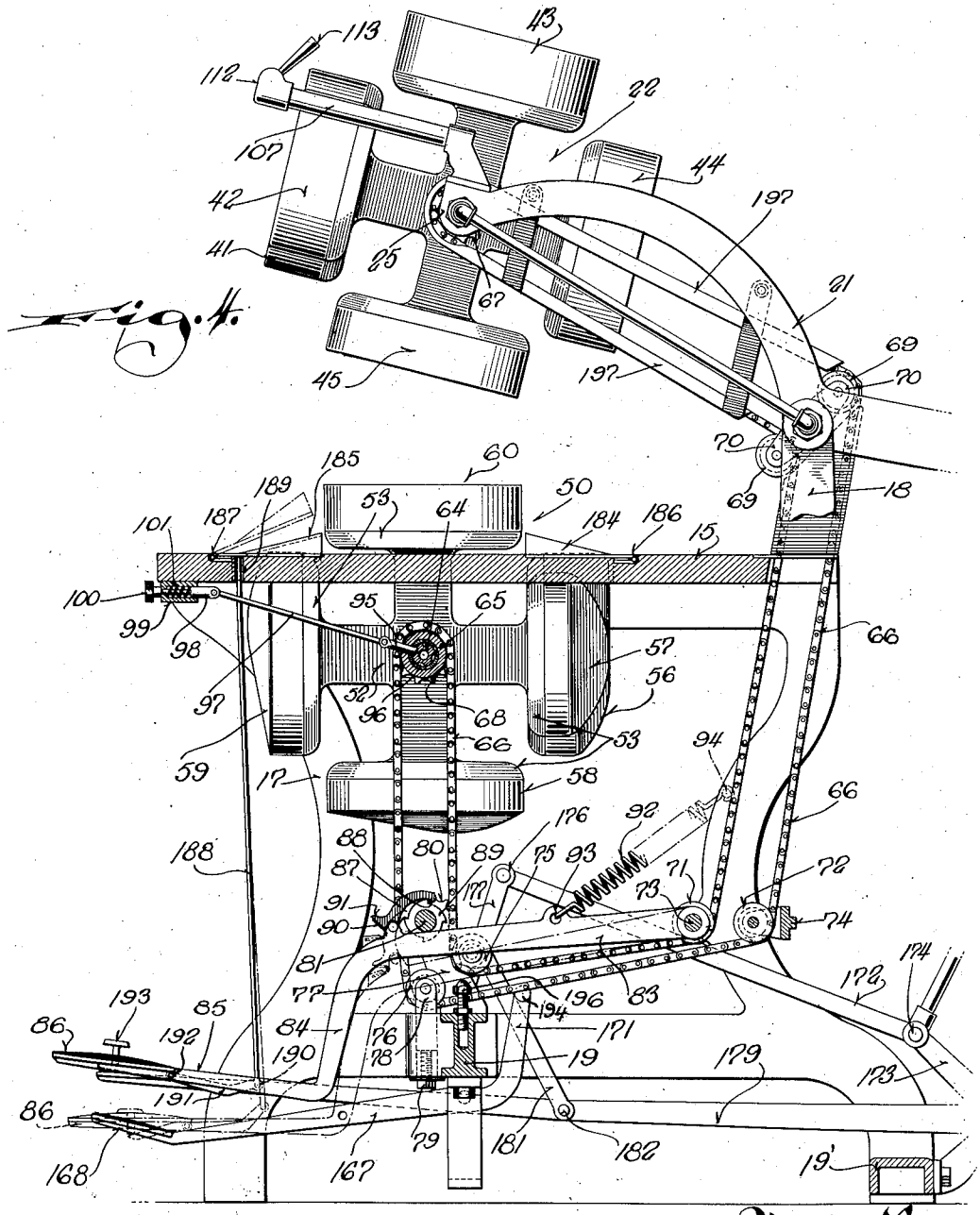

Inventor,

James Fiskow

By Ira M. Jones.

Attorney

Oct. 12, 1926. 1,602,970

J. FISKOW

CLOTHES PRESSING MACHINE

Filed July 14, 1924 7 Sheets-Sheet 5

Fig. 5.

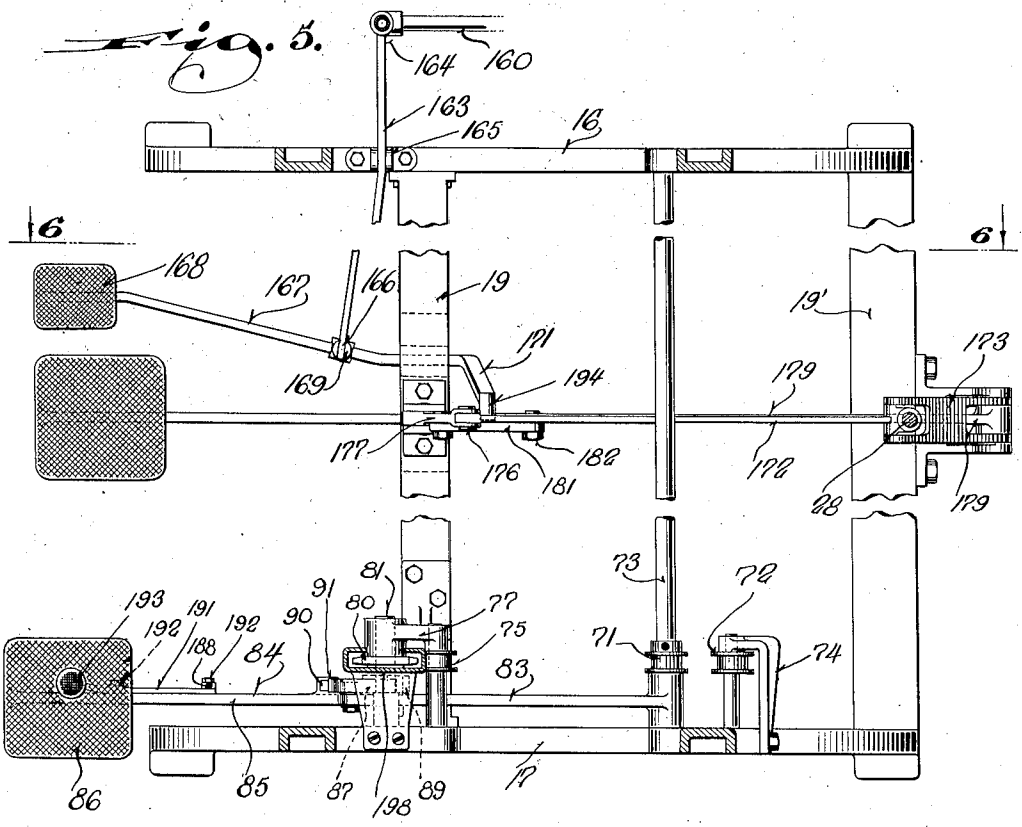

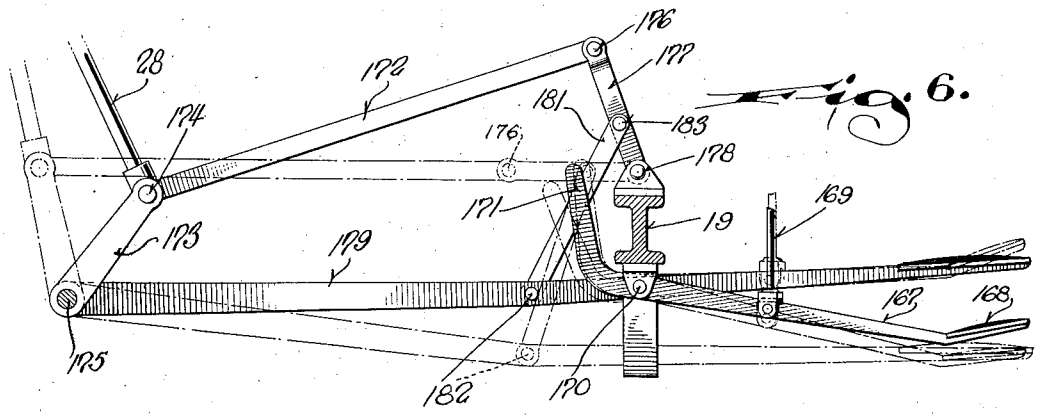

Fig. 6.

Inventor.

James Fiskow

By Ira M. Jones.

Attorney

Oct. 12, 1926. 1,602,970

J. FISKOW

CLOTHES PRESSING MACHINE

Filed July 14, 1924 7 Sheets-Sheet 6

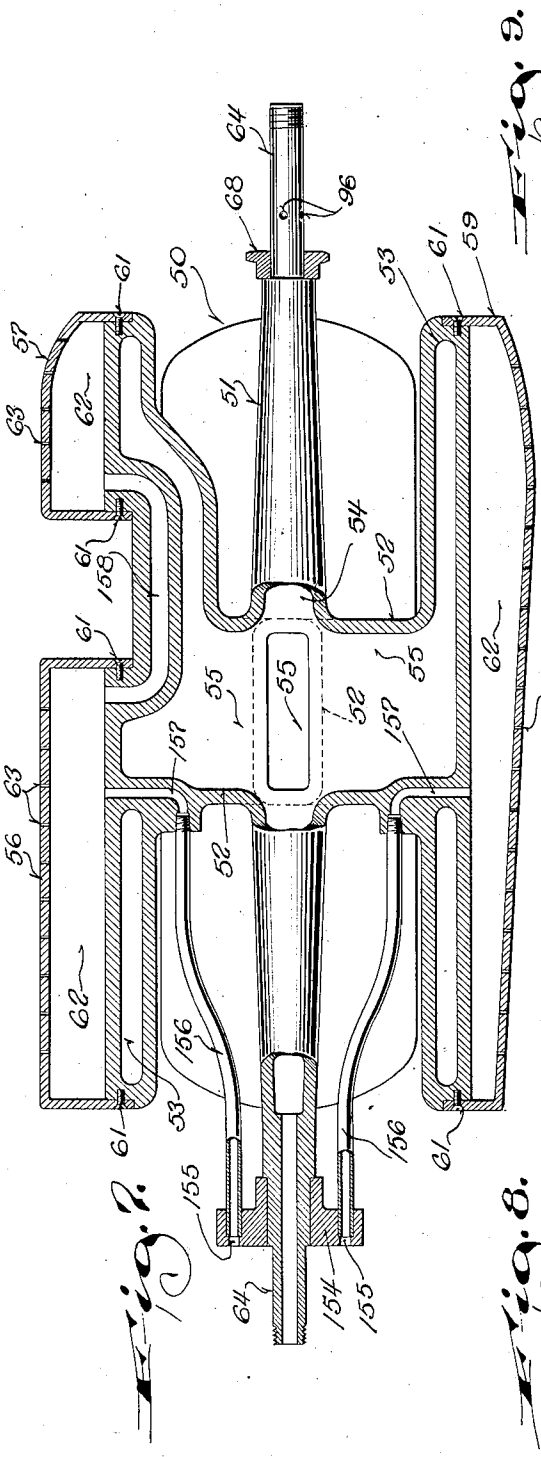

Fig. 2.

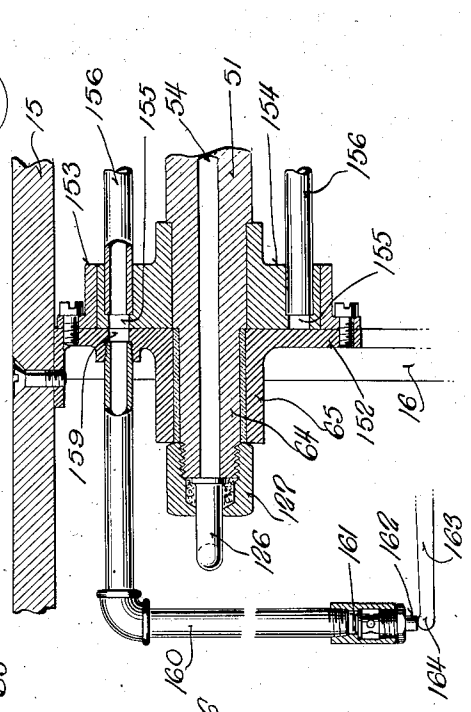

Fig. 9.

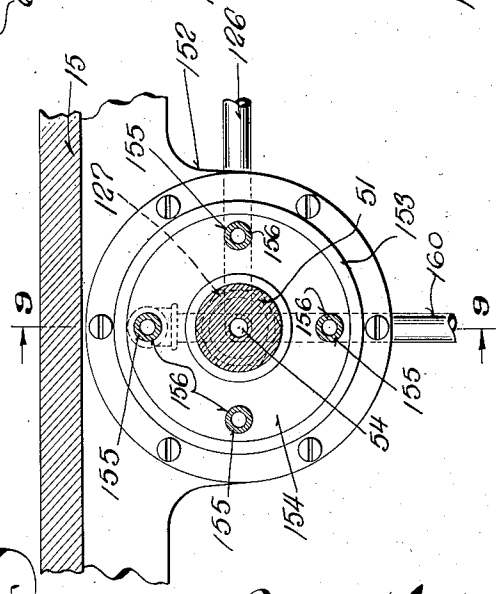

Fig. 8.

Inventor
James Fiskow
By Ira M. Jones.
Attorney

Oct. 12, 1926. 1,602,970

J. FISKOW

CLOTHES PRESSING MACHINE

Filed July 14, 1924 7 Sheets-Sheet 7

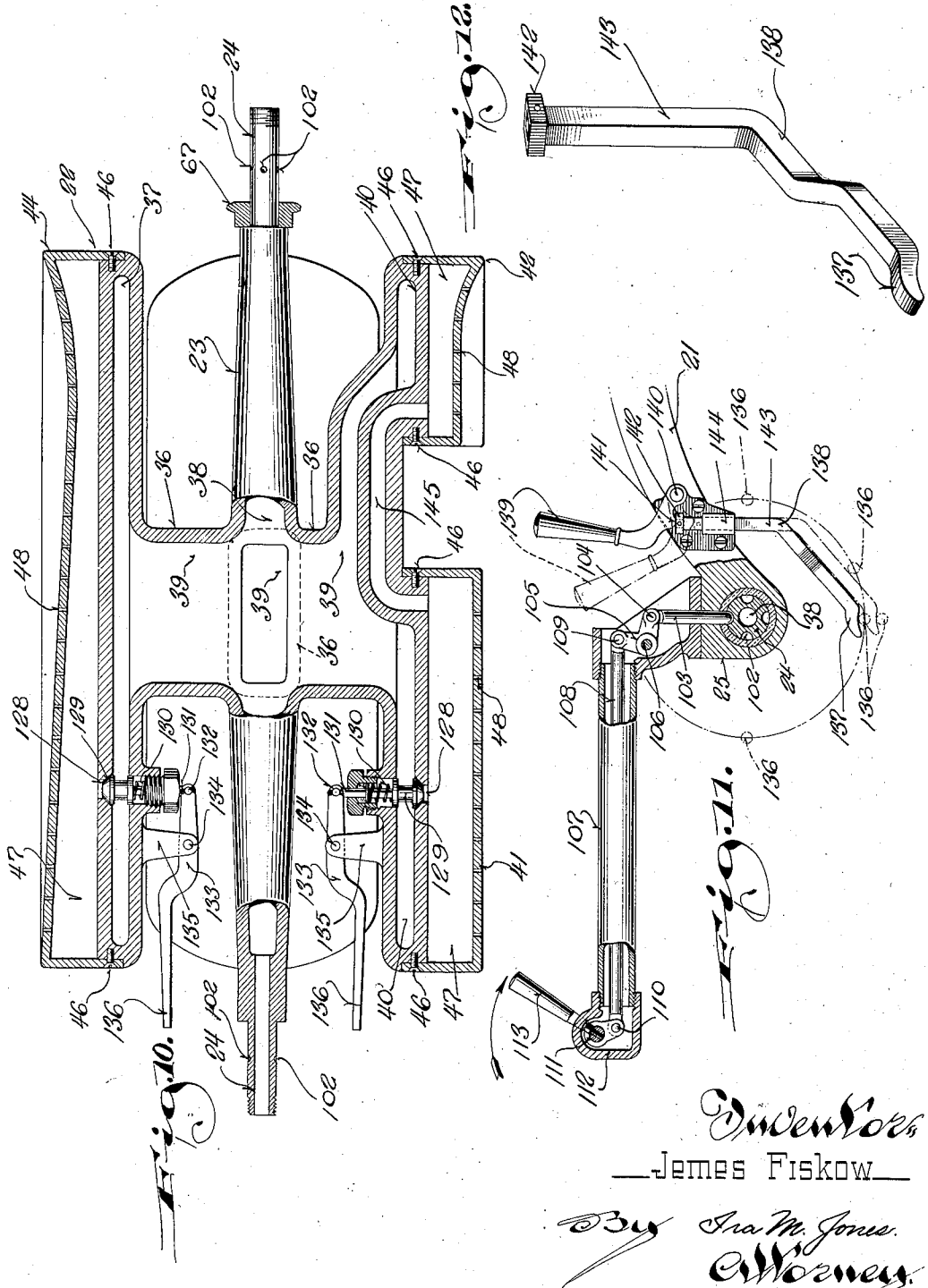

Fig. 10.

Fig. 11.

Fig. 12.

Inventor
James Fiskow
By Ira M. Jones.
Attorney.

Patented Oct. 12, 1926. 1,602,970

UNITED STATES PATENT OFFICE.

JEMES FISKOW, OF MILWAUKEE, WISCONSIN, ASSIGNOR OF ONE-THIRD TO ANTHONY S. BARANOWSKI AND ONE-THIRD TO STANISLAUS BARANOWSKI, BOTH OF MILWAUKEE, WISCONSIN.

CLOTHES-PRESSING MACHINE.

Application filed July 14, 1924. Serial No. 725 925.

This invention relates to certain new and useful improvements in clothes pressing machines of that type employing two mating pressing members between which the work to be pressed is placed and subjected to a pressing action while having live steam applied thereto.

Heretofore, it has been necessary to employ as many as five different types of machines in large establishments, requiring a large amount of invested capital and a large amount of floor space.

Having this objection to the use of machines for pressing work in mind, this invention contemplates as one of its objects the provision of a clothes pressing machine embodying all the mating presser members or heads necessary for pressing all parts of various wearing apparel, such as coats, trousers and other garments thus eliminating the provision of extra machines and, consequently, reducing the floor space required and the amount of capital invested.

Another objectionable feature of the pressing machines heretofore employed is that even tho as many as five types of machines are used, it has been necessary to finish portions of coats and other garments by hand, which materially reduces the number of garments one man can press in a given period of time. The former types of pressing machines, by reason of the fact that portions of the garments could not be pressed thereon, required the services of a bushelman, in addition to the machine operator, for doing the hand work.

With these additional objectionable features of the former types of pressing machines in mind, it is another object of this invention to provide a machine of the character described in which all portions of coats and other garments may be pressed thereon, thus eliminating the services of a bushelman and increasing the number of garments an operator can press in a given period of time.

This invention has as another object the provision of a machine of the character described having a plurality of pairs of mating presser members or heads adapted to be aligned and operated to press work therebetween.

Another objectionable feature of the clothes pressing machines now generally used is that after the live steam has been passed through the work during the pressing action, it is necessary to briskly brush the work to remove the moisture therefrom and this invention contemplates as another object the provision of means for drying the work after the same has been pressed and had steam passed therethrough.

This invention has as a further object the provision of a plurality of mated presser members or heads adapted to be brought together to press work placed therebetween and adapted to be locked in pressing engagement and having means operable automatically upon the release of the presser heads to remove the moisture accumulated on the work during the pressing operation.

A still further object of this invention resides in the provision of pairs of coordinated presser heads having means for aligning the mating presser heads in operative positions.

With the above and other objects in view which will appear as the description proceeds, my invention resides in the novel construction, combination and arrangement of parts substantially as hereinafter described and more particularly defined by the appended claims, it being understood that such changes in the precise embodiment of the hereindisclosed invention may be made as come within the scope of the claims.

In the accompanying drawings, I have illustrated one complete example of the physical embodiment of my invention constructed according to the best mode I have so far devised for the practical application of the principles thereof, and in which:—

Figure 1 is a view, partly in side elevation and partly in vertical section, taken transversely through a clothes pressing machine or apparatus constructed in accordance with my invention;

Figure 2 is a top plan view thereof;

Figure 3 is an elevational view thereof looking at the front of the machine;

Figure 4 is a view, partly in side elevation and partly in transverse section, taken through Figure 2 on the plane of the line 4—4;

Figure 5 is a fragmentary view, partly in top plan and partly in horizontal section, taken through Figure 3 on the plane of the line 5—5;

Figure 6 is a fragmentary view illustrating the levers for actuating the drying mechanism and the movable mandrel head, said view being taken through Figure 5 on the plane of the line 6—6;

Figure 7 is a view of the bottom presser member or head carrying buck detached from the machine, said view being partly in section and partly in elevation and taken through Figure 3 on the plane of the line 7—7;

Figure 8 is a fragmentary view, partly in section and partly in elevation, taken through the hot air supply end of the bottom presser members or heads on the plane of the line 8—8 of Figure 3;

Figure 9 is a view, partly in elevation and partly in section, taken through Figure 8 on the plane of the line 9—9;

Figure 10 is a view similar to Figure 7 taken through the upper presser member or head carrying buck on the plane of the line 10—10 of Figure 3;

Figure 11 is a fragmentary view, partly in section and partly in elevation, of the upper buck carrying frame and the mechanism for locking the upper buck in position with its lower-most presser head in pressing engagement with the upper-most presser head of the lower buck, and the means for ejecting steam upwardly through one of the engaged presser heads, said view being taken through Figure 3 on the plane of the line 11—11, and

Figure 12 is a perspective view of the actuating lever or finger for connecting the steam control lever with the steam valve of the lower-most presser head of the upper buck.

Referring now more particularly to the accompanying drawings, in which like numerals designate like parts throughout the several views; the numeral 15 designates a substantially horizontal table or work board which is supported adjacent its ends by a pair of standards 16 and 17 each carrying at their rear ends an arm 18 which extends above the table 15 adjacent the rear edge thereof. The standards are tied together and braced near their lower ends by horizontal frame members 19 and 19' which may be cast integral with the standards 16 and 17 or else made separate therefrom and secured in position by bolts or other fastening means to insure rigidity of construction and afford means for mounting the machine actuating instrumentalities, to be hereinafter described.

Connecting the standard projections 18 is a shaft 20 on which is medially journaled the side arms or members 21 of an upper buck frame, the forward ends of which are curved or arched upwardly and then downwardly and have an upper buck 22 rotatably mounted therebetween in the manner hereinafter described. The buck 22 has a central tubular shaft member 23, the ends 24 of which are journaled in bearings 25 carried by the outer end portions of the arms. The rear portions of the upper buck frame are inclined toward each other with their extreme rear ends parallel and secured together by fastenings 26 to provide an adjustable support for a counter-weight 27.

The upper buck frame is rocked on its shaft 20 to raise and lower the upper presser heads, by a rod 28 having a sleeve or collar 29 slidable on the upper end portion thereof and pivotally connected with the buck frame by trunnions 30, extended from opposite sides of the collar and pivotally secured in the frame side members within a pocket or space 31 formed adjacent the point where the side members 21 are connected. The rod 28 is yieldably connected with the sleeve or collar by expansile springs 32 and 33 coiled about the rod and confined between the sleeve and a washer or collar 34 secured to the outer end of the rod and a collar or stop 35 fixed on the rod 28 below the sleeve 29, respectively.

A plurality of tubular, radial arms 36 extend laterally from the tubular shaft of the upper buck and carry elongated steam chests or heating chambers 37 which are connected with the bore 38 of the shaft 23 by the bores 39 of the radial arms. One chest 40 is divided into two sections mounting collar and shoulder presser heads or members 41 and 42, respectively, the remaining steam chests having right breast or front, left breast or front and straight presser heads or members 43, 44 and 45, respectively, secured thereto.

The presser heads are preferably of polished metal and are removably secured over their respective steam chests or heating chambers by fastenings 46, with their outer walls spaced from the tops of the steam chests to provide chambers 47 into which steam is injected to be discharged through perforations 48 in the presser heads, means, to be later described, being provided to prevent the release of steam from the chamber of any but the lowermost presser head.

Rotatably mounted between the standards 16 and 17, and registering with a cut-away portion or opening 49 in the table 15, is a lower buck 50 of similar construction to the uppermost buck 22 and having a tubular central shaft 51 from which a plurality of tubular radial arms 52 extend carrying elongated steam chests or heating chambers 53 at their outer ends communicating with the bore 54 of the shaft through the bores 55 of the radial arms. One of the chests 53 is divided in two sections or parts over which collar and shoulder pressing heads or members 56 and 57, respectively, are secured, the remaining steam chests having right breast

or front, left breast or front and straight presser heads or members 58, 59 and 60, respectively, secured thereto.

The presser heads of the lower buck are preferably of polished metal and shaped and designed to mate with their respective upper presser heads to have a snug fit therewith when brought into pressing relationship. Fastening members 61 secure the lower heads on their respective steam chests with their outer walls spaced from the steam chests to provide air chambers 62 from which heated air is expelled through perforations 63 in the presser heads to remove any moisture accumulated on the work during the pressing operation.

The ends 64 of the lower buck shaft are journaled in bearings 65 carried by the standards 16 and 17, as best illustrated in Figure 9, and the upper and lower bucks are connected for coordinated step by step rotation to insure the mating, at all times, of the presser heads. The bucks are rotated by a sprocket chain 66 trained about a sprocket 67 on one end of the tubular shaft of the upper buck and about a sprocket 68 on the adjacent end of the tubular shaft of the lower buck. The intermediate portion of the sprocket chain is trained about idle wheels 69 mounted in bracket members 70 mounted on the shaft 20, an idle wheel 71 journaled on a shaft or rod 73 connecting the standards 16 and 17 near the lower rear ends thereof, an idle wheel 72 journaled in a bracket member 74 secured to the adjacent standard in a suitable manner, and about idle wheels 75 and 76 positioned substantially beneath the sprocket 68. The idle wheel 75 is journaled in a bearing bracket formed on one arm of a bearing bracket 77 supported from transverse beam 19 and the idle wheel 76 is journaled in a bearing bracket 78 adjustably secured to the beam 19 by a tension screw 79.

As best illustrated in Figures 1 and 4, the idle wheels 75 and 76 are so positioned as to draw the stretches of the chain thereabove together and maintain them in engagement with the opposite sides of an actuating sprocket wheel 80 positioned therebetween and fixed to a stub shaft 81 journaled in the upper end of the bracket arm 77 and a bearing 82 carried by the standard 17. The screw 79 provides means for maintaining the sprocket chain 66 under the desired tension to accommodate stretching thereof and rotation of the actuating sprocket 80 simultaneously advances or rotates the bucks to disalign and align their respective pairs of presser heads.

As the presser heads must be in true horizontal positions when in operative position it is essential that means be provided to insure their rotation but a single step each time it is desired to change the pair of presser heads to be used. This is accomplished by an actuating lever 83 having its inner end pivotally mounted on the shaft 73 and its outer end portion directed downwardly, as at 84 and then laterally, as at 85, with an actuating pedal 86 on its extreme end. A dog or pawl 87 is pivotally mounted on the lever 83 adjacent the upper end of the portion 84 thereof, with a lip or ratchet engaging end 88 on the outer free end thereof normally yieldably urged to engagement with a ratchet wheel 89 by force of gravity and an expansile spring 90 confined between an extended end 91 on the pawl and the lever 83. The ratchet wheel 89 is secured to the stub shaft 81.

The ratchet 89 has as many stops or teeth as there are presser heads on each buck, and lever 83 is normally yieldably urged to its full line position illustrated in Figures 1 and 4 by a spring 92, one end of which is secured to the lever as at 93 and the other end to the standard 17, as at 94. Depression of lever 83 to its dotted line position illustrated in Figure 4 causes the pawl to advance or rotate the ratchet wheel 89 one stop or tooth, simultaneously advancing the bucks to register the next presser heads.

The bucks 22 and 50 are readily releasably locked against rotation in order to insure their constant alignment and prevent their accidental rotation. The lower buck is readily releasably locked against rotation by a locking bolt or finger 95 (Figs. 3, 4 and 7) passed through one of the bearings 65 and engageable with one of the four locking notches or recesses 96 in the adjacent end 64 of the buck shaft. The bolt 95 has a link 97 pivotally connected therewith which is pivotally connected with a plunger 98 slidably mounted in a housing 99 secured to the under side of the table 15 adjacent its forward edge and provided with a knurled head or operating button 100 to facilitate its actuation. The plunger 98 is normally urged by a spring 101 to extend the bolt 95 into the bearing 65 to engage in the locking notch 96 in register with the opening through which the bolt passes.

The upper buck is readily releasably locked against rotation in a similar manner having locking notches 102 in one end of the shaft thereof adapted to register with an opening in the adjacent bearing 25 and through which a locking bolt or pin 103 is passable. The locking pin or bolt is pivotally connected, as at 104, with one arm of a bell-crank 105 which is pivoted, as at 106, in the adjacent inner end of a yoke frame 107 connecting the outer ends of the members 21, one end of an actuating link 108 being connected with the other arm of the bell-crank, as at 109. The link 108 is concealed within the adjacent side portion of the yoke 107 and has its outer end piv-

otally connected, as at 110, with a crank arm mounted on a rod 111 journaled in the outer closed portion 112 of the yoke and having an actuating lever or finger 113 medially secured thereto so that movement of the lever 113 in the direction of the arrow in Figure 11 disengages the bolt 103 from its locking notch to permit rotation of the buck

As herein described, each presser head is mounted over a steam chest or heating chamber the interior of which is connected with the bore of the tubular shaft and live steam is constantly supplied thereto from a steam generator or boiler 114. A gas burner or other heating means 115, is employed and a steam outlet 116 leads from the boiler near its top and is branched as at 117 and 118, branch 117 being connected with the upper buck and branch 118 with the lower buck in the manner now about to be described.

The ends of the shaft 20 are tubular and connected with the adjacent ends of the upper buck shaft by inlet and outlet pipes 119 and 120, respectively, the ends of the pipes being connected with the shafts 20 and 23 by packing glands 121 and 122, respectively. The branch 117 of the steam supply line is connected with the tubular end of the shaft 20 having the pipe 119 connected therewith so that steam from the boiler enters the upper buck through the pipe 119 and the bore of the tubular shaft 23, circulating through the steam chest, heating the heads and returning to the boiler through the outlet pipe 120, the adjacent bored end of the shaft 20, to an exhaust return 123 through a branch duct 124.

The steam enters the lower buck in a somewhat similar manner, the supply branch 118 being connected with the adjacent end of the tubular shaft 51 thereof by a packing gland 125 and an exhaust return 126 being connected with the other end of the lower buck by a packing gland 127, in a manner similar to that illustrated in Figure 9, the exhaust return 127 being connected with return 123 to insure the proper circulation.

At the time of pressing the work, it is desirable to inject live steam therethrough to produce a cleaning action and supply the moisture necessary to insure proper creasing, and leading from each steam chest or heating chamber 27 of the upper buck to the chambers 47 of the pressers heads are ports 128 normally closed by valves 129 normally held closed by springs 130. Each valve 129 has a stem 131 extended exteriorly of the steam chest and pivotally connected, as at 132, with the inner end of a lever 133 medially pivotally mounted, as at 134, to a lug or ear 135 carried by the lower wall of the adjacent steam chest and having its outer end 136 adapted to lie within the path of the end 137 of an actuating member 138 when the presser head carrying the same is lowermost. Depression of the actuating member 138 by means of a handle 139 pivoted, as at 140, to the side 21 of the upper buck frame and having a projection 141 normally engaged with the upper end 142 of the actuating lever, depresses the end 136 of the valve lever 133, as illustrated in dotted lines in Figure 11, opening the valve and permitting live steam to enter the chamber 47 from which it passes through the perforations 48 in the presser head.

As illustrated in Figure 11, the member 138 is of an irregular shape to prevent its interference with the rotation of the upper buck and the vertical portion 143 thereof is slidably but non-rotatably mounted in a guide 144 fixed to the adjacent side arm of th upper buck frame. As one steam chest is divided into two sections to accommodate the collar and shoulder presser heads, the chambers 47 thereof are connected by a by-pass or duct 145, in the manner illustrated in Figure 10, so that but a single valve 129 is required to connect the collar and shoulder presser head chambers with the source of steam.

After live steam has been passed through the work, there is considerable moisture which should be removed, and heretofore it has been customary to briskly brush the work to remove this mosture and, in the accompanying drawings, I have illustrated means for quickly removing moisture from the work by ejecting heated air therethrough.

The upper end of the boiler 114 is closed by a hood 146 provided with a plurality of air inlet ports 147 and an air outlet 148 with which the inlet 149 of a blower fan 150 is connected, the outlet 151 of the blower fan being connectible with the chamber 62 of the upper-most presser head of the lower buck in the manner now about to be described. The bearing 65 at the exhaust end of the shaft 51 is formed with a flange or plate 152 carrying on its inner face a retaining ring 153 between which, and the inner face of the flange 152, a collar plate 154 fixed to the adjacent end of the shaft 52 is snugly but rotatably mounted. The collar 154 is provided with four equi-spaced ports 155 which are connected with the adjacent chambers 62 by pipes 156 leading therefrom to ducts or passages 157 in the spider arms 52 connected with the chambers 62. The chamber 62 of the collar and shoulder presser heads 56 and 57 are connected by a by-pass or duct 158 in a manner similar to that of the collar and shoulder heads of the upper buck. The flange 152 of the bearing 65 has a port 159 therein which is adapted to register with the port 155 of the upper-most presser head of the lower buck when in operating position and the

port 159 is connected with the outlet of the blower fan by a supply pipe 160.

The supply of air is normally closed by a valve member 161 therein having an actuating plunger or stem 162. The valve 161 is operable by a lever 163, the end 164 of which is normally engaged with the valve stem or plunger 162 and which is medially pivotally secured to the standard 16, as at 165, with its other end 166 pivotally connected with the lever 167 of an actuating pedal 168 by a link 169. The lever 167 is pivotally mounted in a bearing bracket 170 (Fig. 6) carried by the beam 19 and is extended rearwardly of the bracket 170 and directed upwardly to provide an upper buck head release arm 171 to be later described.

The lower end of the rod 28 is pivotally connected with the inner ends of a long and a short link 172 and 173, respectively, by a common pivot 174, the outer end of the short link 173 being pivotally supported from a shaft 175 carried by a bracket arm secured to the beam 19' and the outer end of the long link 172 being pivotally connected, as at 176, with one end of a link 177, the other end of which is pivotally connected with the beam 19, as at 178. A buck locking lever 179 has its rear end pivotally mounted on the shaft 175 and its forward end extended to the front of the machine and provided with an actuating pedal 180, a lever or link 181 having one end pivotally connected with the medial portion of the lever 179, as at 182, and its other end pivotally connected, as at 183, with the medial portion of the link 177. This arrangement assists in the lowering of the upper buck against the counter-weight 27 and in the readily releasably locking of the upper buck in its lowered position with its lower-most presser head in engagement with the upper-most presser head of the lower buck, in the manner hereinafter described.

That portion of the opening 49 in the table 15 on each side of the upper-most presser head of the lower buck is normally covered by guards 184 and 185 hingedly connected with the table, as at 186 and 187, respectively, to permit their swinging upwardly out of the path of the presser heads of the lower buck as the same is rotated to bring another presser head into working position. The guard 184 is swung to open position by the next presser head during rotation of the buck, as will be readily obvious, and means are provided to swing the guard 185 to a position out of the path of the presser head. The means of opening guard 185 comprises a rod 188, the upper end of which passes through an opening 189 in the table to engage the under side of the guard and the lower end of which is pivotally connected, as at 190 (Fig. 4), with the inner end of a lever 191 medially pivotally connected, as at 192, with the lower buck rotating lever 85, the outer end of the lever 191 being engageable with a depressing button 193. Placing of his foot by the operator on the pedal 86 to rotate the head, first depresses button 93 to swing the guard 185 free of the lower buck presser heads through the medium of the lever 191 and the rod 188.

When it is desired to press straight work, the bucks are rotated to position the presser heads 45 and 60 in operative relationship and the operator places the work over the exposed presser head of the lower buck, which may or may not be provided with a suitable covering, depending on the material of the work, and lowers the upper buck by pulling downwardly on the yoke member 107, simultaneously depressing pedal 180. As the presser head 45 engages the presser head 60 with the material therebetween, the links 172 and 177 straighten out with the pivot 176 dropping slightly below dead center. Spring 33 being under compression, the upper buck is thus locked in engagement with the lower buck and produces a firm pressing action on the work between the presser heads. The operator then moves the lever 139 to its dotted line position illustrated in Figure 11 causing end 137 of the member 138 to depress the end 136 of the lever 133 of the presser head 45 connecting the chamber 47 thereof with the steam supply, causing steam to be injected through the work.

When the desired volume of steam has been passed through the garment, lever 139 is returned to its full line position and the pedal 168 depressed, engaging a projection 194 on its end 171 with the link 177 to move the pivot 176 above dead center and permit the raising of the upper buck by the release of the stored energy of the spring 32 and the counter-weight 27. Simultaneous with the release of the upper buck, the air inlet 161 is opened through the levers 163 and 169 connecting chamber 62 of the presser head 60 with the source of heated air by reason of its pipe 155 being in register with the port 159 of the flange 152. The heated air is forced outwardly through the apertures 63 of the presser head 60 and through the garment, as long as the pedal 168 is depressed.

When it is desired to press either the collar or shoulder of a garment, the operator releases the locking bolt 103 of the upper buck and the locking bolt 95 of the lower buck, in the manner previously described and depresses the pedal 86 which automatically swings the guard 185 to its open position and simultaneously rotates the bucks one step, the depression of the lever 83 being adjustably limited by a screw stop 196 as illustrated in Figure 4. After the pedal 86 has been depressed and the bucks rotated to align the desired presser heads, the operator removes his foot from pedal 86 which is re-

turned by spring 92 and locks the bucks against rotation by the pins 95 and 103. The operator then moves the guards 184 and 185 to lowered position if they have not dropped of their own weight and the work is then placed over the presser head and the operation previously described repeated.

The sprocket chain 66 is protected at the upper buck carrying frame by a suitable guard 197 and in the main frame by a suitable guard 198 to prevent the catching of the work being handled therein, as will be readily obvious.

From the foregoing description taken in connection with the accompanying drawings, it will be readily apparent to those skilled in the art to which an invention of this character appertains that I provide a unitary machine for pressing all types of work, which is of simple construction and efficient in operation and which will not require excessive floor space.

What I claim as my invention is:

1. A machine of the character described, comprising a buck and a head, a plurality of presser members carried by each, said buck and head being simultaneously rotated to register certain presser members in operative position, and means for bringing the registered pressing members together to press work placed therebetween.

2. A machine of the character described, comprising a buck and a head, a plurality of presser members carried by each, means common to both for rotating said buck and head to bring certain presser members carried by one in operative position with those carried by the other, and means for bringing the presser members together to press work placed therebetween.

3. A machine of the character described, comprising a buck and a head, a plurality of presser members carried by each, said buck and head being rotatable to register certain presser members in operative position, and means for simultaneously rotating said buck and head to register certain presser members thereof.

4. A machine of the character described, comprising a rotatable buck and head, presser members carried by each, said buck and head being rotatable to register certain presser members in operative position, means for bringing the presser members into pressing engagement, and means common to both for releasably locking the buck and head against rotation.

5. A machine of the character described, comprising a buck having a plurality of presser members, means for rotating the buck to bring any one of said members into action, a pressing head movable to engagement with the buck and having a plurality of presser members adapted to act with those carried by the buck, and means for rotating the buck and head together so that certain of the presser members carried by each may cooperate for the engagement of certain portions of work therebetween.

6. In a machine of the character described, a rotatably mounted head, a plurality of heating chests carried thereby, presser members carried by the heating chests, means for selectively positioning the presser members in operative position, and means operable to eject steam from the presser member in operative position on to the work being pressed.

7. In a machine of the character described, a rotatably mounted head, a plurality of heating chests carried thereby, presser members carried by the heating chests, means for rotating the head to selectively position the presser members in operative position, means for supplying a heating medium to the heating chests, ports connecting the heating chests with the presser members, valve members normally closing said ports, and means operable to open the valve member of the presser member in operative position to permit a portion of the heating medium to enter said presser member.

8. In a machine of the character described, a rotatably mounted head, a plurality of heating chests carried thereby, presser members carried by the heating chests, means for rotating the head to selectively position the presser members in operative position, means for supplying a heating medium to the heating chests, chambers located between the heating chests and the presser members, ports connecting the heating chests with the presser member chambers, valve members normally closing said ports, and means operable to open the valve member of the presser member in operative position to permit a portion of the heating medium to enter the corresponding presser member chamber.

9. In a machine of the character described, a rotatably mounted buck, a plurality of presser members carried by the buck, means for rotating the buck to selectively position the presser members in operative position, a source of heated air, air branch ducts leading to the presser members, a valve normally closing said heated air supply, and means connecting said heated air supply only with the presser member in operative position upon opening of said valve.

10. A machine of the character described, comprising a rotatable buck and head, presser members carried by each, said buck and head being rotatable to dispose certain presser members thereof in working position, means for bringing the presser members of the buck and head into pressing engagement, means for simulta-

neously rotating the buck and head step by step to position other presser members in working positions, and means for independently locking the buck and head against rotation.

11. In a machine of the character described, a supporting frame, a work table mounted on the frame and having an elongated opening therein, a buck rotatably mounted in the frame, a plurality of presser members carried by the buck and adapted to be selectively positioned in the opening of the work table, a movable guard closing said opening at the side of the presser member in register therewith, means for rotating the buck to register the respective presser member with the work table opening, and means operable to move said guard out of the path of the presser member extended through the opening prior to the rotation of the buck.

12. In a machine of the character described, a supporting frame, a work table mounted on the frame and having an elongated opening therein, a buck rotatably mounted in the frame, a plurality of presser members carried by the buck and adapted to be selectively positioned in the opening of the work table, a movable guard closing the opening at the side of the presser member in register therewith, means for rotating the buck to register the respective presser member with the work table opening, and means operable upon actuation of the buck rotating means to move said guard out of the path of the presser member extending through the opening.

13. A machine of the character described, comprising a main frame, an auxiliary frame swingingly mounted from the main frame, a buck rotatably mounted in the main frame, a head rotatably mounted in the outer end portion of the auxiliary frame and adapted to be moved therewith into engagement with the buck, a plurality of presser members carried by said buck and head, each presser member of the buck being adapted to mate with a presser member of the head so that movement of the buck and head together brings the lower presser member of the buck into pressing engagement, means connecting the buck and head whereby rotation of one rotates the other, and an actuating lever connected to said means for simultaneously rotating the buck and head.

14. A machine of the character described, comprising a main frame, an auxiliary frame swingingly mounted from the main frame, a buck rotatably mounted in the main frame, a head rotatably mounted in the outer end portion of the auxiliary frame and adapted to be moved therewith into engagement with the lower buck, a plurality of presser members carried by said buck and head, each presser member of one being adapted to mate with a presser member of the other so that movement of the buck and head together brings the lower presser member of the head into pressing engagement with the upper presser member of the buck, means connecting the buck and head whereby rotation of one rotates the other, and actuating lever for simultaneously rotating the buck and head, and means for readily releasably locking said buck and head against rotation with the lower presser member of the head and the upper presser member of the buck in operative positions.

15. A machine of the character described, comprising a main frame, an auxiliary frame swingingly mounted from the main frame, a buck rotatably mounted in the main frame, a head rotatably mounted in the outer end portion of the auxiliary frame and adapted to be moved therewith into engagement with the buck, a plurality of presser members carried by each, each presser member of the buck being adapted to mate with a presser member of the head so that movement of the buck and head together brings the lower presser member of the head into pressing engagement with the upper presser member of the buck, means for readily releasably locking the auxiliary frame in position with the lower presser member of the head in pressing engagement with the upper-most presser member of the buck, and means for releasing said locking mechanism.

16. In a machine of the character described, a framework, a head including a tubular shaft, tubular radial arms extended from the shaft, heating chests formed on the outer ends of the radial arms and presser members carried by the heating chests but spaced therefrom to provide chambers therebetween, means rotatably mounting the ends of the tubular shaft in said frame work, means for rotating the head to dispose the presser members thereof in operative position, means for supplying a heating medium to the heating chests through the bore of said tubular shaft and the bores of the radial arms, a port leading from each heating chest to the chamber of the adjacent presser member, spring pressed valves normally closing said ports, actuating levers connected with said valves, and means engageable with the lever of the presser member in operative position to open the valve member connected therewith and permit the heating medium to pass from the heating chest into the presser member chamber.

17. In a machine of the character described, a framework, a head including a tubular shaft, tubular radial arms extended from the shaft, heating chests formed on the outer ends of the radial arms and presser members carried by the heating chests but spaced therefrom to provide chambers therebetween, means rotatably mounting the ends

of the tubular shaft in said framework, means for rotating the head to dispose the presser members in operative position, means for supplying a heating medium to the heating chests through the bore of said tubular shaft and the bores of the radial arms, a port leading from each heating chest to the chamber of the adjacent presser member, a spring pressed valve normally closing said port, an actuating lever for each valve, means medially pivotally connecting the levers with the adjacent heating chests, means pivotally connecting the inner end of said levers with the adjacent valves, the outer ends of said levers being extended beyond the heating chests, and means engageable with the outer end of the lever mounted on the heating chest carrying the presser member in operative position to pivot the same and open its valve to permit the heating medium to pass from the heating chest into the presser member.

18. In a machine of the character described, a framework, a head including a tubular shaft, tubular radial arms extended from the shaft, heating chests formed on the outer ends of the radial arms and presser members carried by the heating chests but spaced therefrom to provide chambers therebetween, means rotatably mounting the ends of the tubular shaft in said framework, means for rotating the head to dispose the presser members in operative position, means for supplying a heating medium to the heating chests through the bore of said tubular shaft and the bores of the radial arms, a port leading from each heating chest to the chamber of the adjacent presser member, a spring pressed valve normally closing said port, an actuating lever for each valve, means medially pivotally connecting the levers with the adjacent heating chests, means pivotally connecting the inner end of said levers with the adjacent valves, the outer ends of said levers being extended beyond the heating chests, a control member vertically slidably mounted in the framework, the lower end of said control member being in the path of the outer ends of said valve, actuating levers to engage the same as the presser members thereof are brought into operative position, and means for actuating the control members to open the valve connected with the lever engaged thereby and permit the heating medium to enter the presser member.

19. A machine of the character described, comprising a buck, means rotatably mounting the buck, a plurality of presser members carried by the buck, means for rotating the buck to dispose the presser members in operative position, chambers communicating with said presser members, a flange carried by the buck, a port in said flange for each presser member chamber, means connecting each port with the chamber of one presser member, and a drying medium supply connectible with the port leading to the presser member chamber in pressing position.

20. A machine of the character described, comprising a buck, means rotatably mounting the buck, a plurality of presser members carried by the buck, means for rotating the buck to dispose the presser members in operative position, chambers communicating with said presser members, a flange carried by the buck, a port in said flange for each presser member chamber, means connecting each port with the chamber of one presser member, a drying medium supply connectible with the port leading to the presser member chamber in pressing position, and means for controlling the flow of drying medium to the presser member chamber connected with the supply.

In testimony whereof I affix my signature.

JEMES FISKOW.