June 21, 1932. L. H. FENSTERMAKER 1,863,625

METAL SHELVING

Filed Nov. 1, 1929

Fig. 1

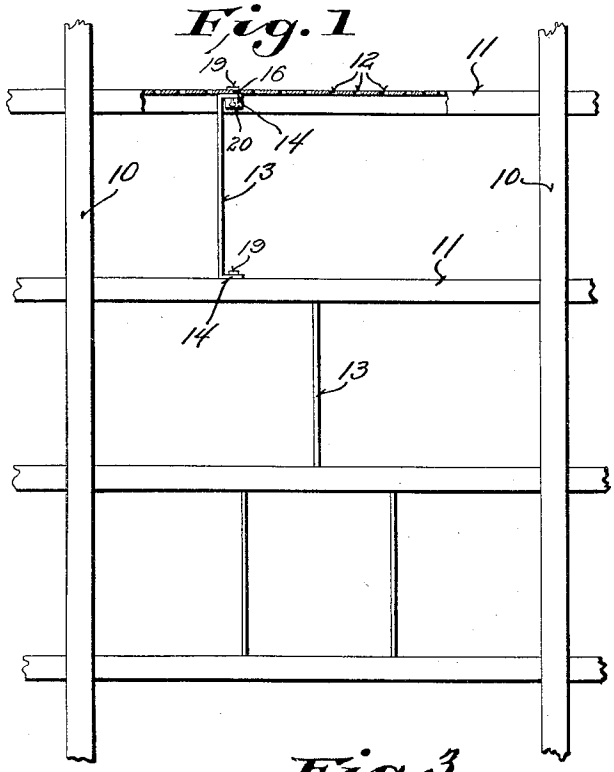

Fig. 2

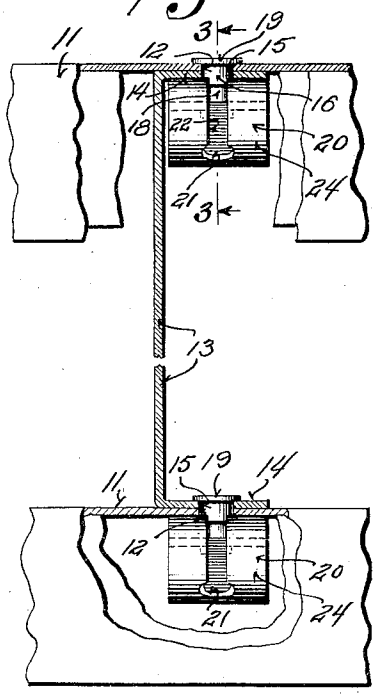

Fig. 3

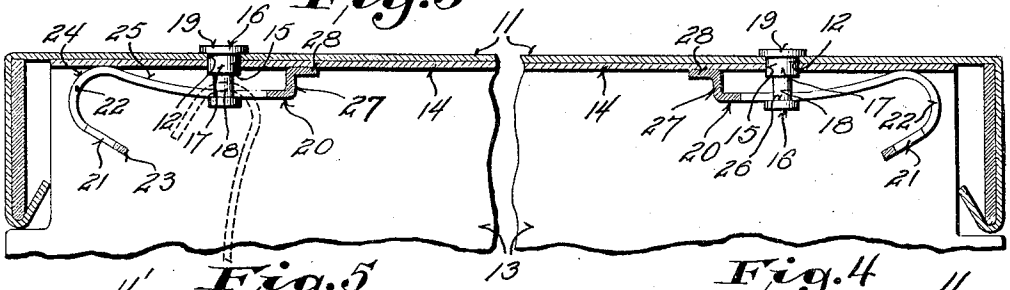

Fig. 5

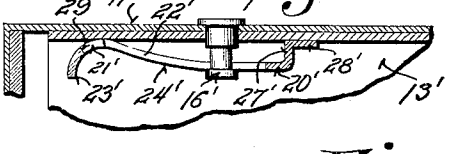

Fig. 4

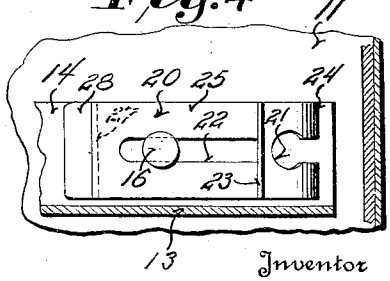

Fig. 6

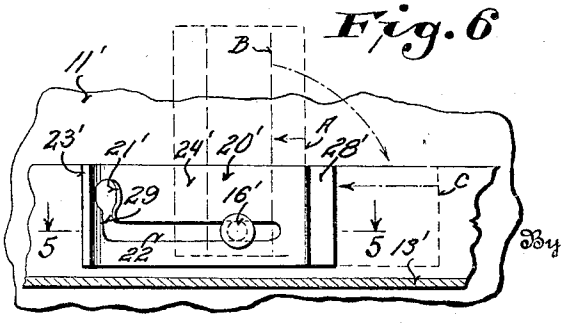

Inventor

Lloyd H. Fenstermaker

By Ralph Brown.

Attorney

Patented June 21, 1932 1,863,625

UNITED STATES PATENT OFFICE

LLOYD H. FENSTERMAKER, OF MILWAUKEE, WISCONSIN

METAL SHELVING

Application filed November 1, 1929. Serial No. 403,938.

This invention relates to metal shelving and more particularly to improved means for releasably retaining partitions in sheet metal shelving.

One object of the present invention is the provision of an improved pin and clip connection which will permit the positioning and retaining of the partition without requiring the use of nuts and bolts or other fastening means which require the use of tools for releasably retaining the several partitions in position between the shelves.

A more specific object resides in the formation of a pin and clip connector to insure against accidental separation of these elements should the clip be displaced from its retaining position.

The present invention is related to the invention disclosed in my copending application for metal shelving filed August 29, 1929, Serial No. 389,149. In that application I disclosed a sheet metal shelving which may readily be fabricated or knocked down without the use of tools and further one which could be manufactured and installed at an extremely low cost by virtue of the few essential elements and the simplicity of these elements. My present invention is related to that invention, insofar as I am now applying partitions to the shelving and providing releasable anchoring means therefor. The partitions and releasably retaining means are of simple form and may also be applied or adjusted without the use of tools.

The application of partitions to the shelving shown in my copending application, above referred to, forms a simple and effective means for dividing the shelves to form individual compartments within which material may be placed to segregate it from other materials stored.

Other objects and advantages will appear from the following description of an illustrative embodiment of the present invention.

In the drawing:—

Fig. 1 represents a front elevational view of sheet metal shelving showing the application of partitions and releasable retaining means therefor constructed in accordance with the teachings of the present invention.

Fig. 2 is an enlarged view of portions of two successive shelves broken away to show a partition and releasable retaining means therefor.

Fig. 3 is a view taken on the line 3—3 of Fig. 2 showing both front and rear retaining means in position on the shelving.

Fig. 4 is a fragmentary view of a portion of the shelf and partition showing a bottom plan of the partition retaining means.

Fig. 5 is a sectional view on the line 5—5 of Fig. 6 showing a modified form of the retaining clip.

Fig. 6 is a fragmentary view showing the bottom plan of the modified clip shown in Fig. 5.

The metal shelving to which I apply the partitions and releasable retaining means of the present invention is preferably formed in accordance with the teachings of my copending application above referred to. This shelving comprises a plurality of spaced uprights 10 preferably in the form of T beams having a series of spaced apertures for receiving anchoring means to releasably retain shelves 11 in their proper position. The shelves 11 are preferably provided with a series of spaced apertures 12 lying in vertical planes adjacent the front and rear edges thereof. Partitions 13, preferably formed of sheet metal stampings, are adapted to be releasably retained in desired position between successive shelves by the application of releasable retaining means to be hereinafter more specifically described. These partitions 13 are provided with flanges 14 turned from their top and bottom marginal edges. Apertures 15 are formed in the flanged portions 14 of the partitions 13. These apertures are so spaced that upon proper positioning of the partition between the shelves one aperture 15 will register with an aperture 12 in the series punched adjacent the forward edge of a shelf 11; while the other aperture 15 will register with an aperture 12 in the series punched adjacent the rearward edge of the shelf. When the partition has been placed in the desired position between the shelves with the apertures 15 in the top and bottom flanges of the partition registering with apertures in

the shelves it is then possible to insert retaining pins 16 through the aligned apertures. These retaining pins are formed with a shank portion 17 having a diameter sufficiently smaller than the apertures 12 and 15 to permit ready insertion of the pins through the apertures. The shank portion 17 is provided with a further reduced portion 18 in the form of a groove and for a purpose to be hereinafter more specifically described. The upper extremity of the pin 16 is provided with an enlarged head 19 to prevent the pins from falling through the apertures.

Clips 20 are preferably formed of sheet metal and stamped or bent into form from suitably shaped blanks. Prior to bending or forming the clips, a key hole 21 having an elongated slot 22 is punched from the blank. The clip is then bent into proper form so that the hole 21 lies between one end 23 of the clip and a rather sharply curved portion 24 thereof. The curved portion 24 of the clip merges into a second curved portion 25 which forms a wedge face which acts upon a shoulder 26 on the pin 16 to draw the flange 14 of the partition tightly against the shelf 11. The curved portion 25 of the clip terminates in a shoulder 27 which is provided with an outwardly directed foot 28 which forms one bearing surface for the clip. The other bearing surface for the clip lies adjacent the juncture of the curved portions 24 and 25 thereof.

The clips 20 are applied to the pins 16 by passing the key hole 21 over the lower extremity of the pin so that the end of the pin lies within the curved portion 24 of the clip. With the clip in this position it is possible to swing it so that the reduced portion 18 of the pin enters the slot 22 of the keyhole. The clip may then be swung until the foot 28 of the clip contacts with the bottom of the flange 14 formed on the partition 13. By exerting lateral pressure upon the shoulder 27 of the clip it may be forced inwardly to draw the head 19 of the pin tightly against the upper surface of the shelf by the wedging action of the curved portion 25 of the clip 20 upon the shroulder 26 of the pin 16. In this manner the several pins 16 are placed under tension by the application of the clips 20 to draw the flanges 14 of the partitions tightly against the surfaces of the spaced shelves to releasably retain them in desired position.

By application of the clips 20 in the manner hereinabove described it will readily be seen that the several partitions 13 may be securely held in place by the action of the clip on the pins 16. Should it be found desirable to alter the position of the partition to provide greater space to accommodate the material stored therein it is a very simple matter to remove the several clips 20 and pins 16 without the use of any tools whatsoever. The clips may be disengaged from the pin merely by the longitudinal displacement of the clip in order to break the wedging action between the curved face 25 thereof and the shoulder 26 of the pin. At this time the clip may be swung downwardly and turned through a sufficient angle to permit the lower extremity of the pin to be drawn outwardly through the key hole 21. The pin 16 may be removed by simply applying pressure on the lower extremity thereof to force the same upwardly through the flange 14 of the partition and also the aperture 12 in the shelf. At this time the partition may be moved into the desired position and releasably secured therein by the application of the pins and clips in a manner hereinabove described.

A modified form of clip is shown in Figs. 5 and 6 of the drawing. This clip 20′ is also formed of sheet metal and is applied to the pins 16 in a manner substantially identical to the application of the clips 20. The clip 20′ comprises a foot 28′ turned from the shoulder 27′. A curved face 24′ is directed from the outer extremity of the shoulder 27′ toward the plane of the foot 28′. The other extremity of the face 24′ merges with a downwardly turned extremity 23′. A keyhole 21′ is provided adjacent the end 23′ of the clip 20′. An elongated slot 22′ directed from a key hole 21′ differs from the slot 22 of the preferred form only insofar as it lies adjacent one edge of the clip and is provided with an angularly disposed portion 29 which is directed across the end 23′ of the clip into the keyhole 21′. The application of this clip 20′ to the pin 16′ is effected in the following manner. The key hole 21′ is passed over the lower extremity of the pin 16′ as shown by the broken line showing A of Fig. 6. The clip is then moved laterally into the position indicated by the broken line showing B. From the position B the clip is swung about the pin 16′ as a pivot to the dotted line showing C. From this position it may be forced horizontally to the full line position shown to effect a wedging action on the pin 16′. The clips 20′ serve in the identical manner as the clips 20 to releasably retain partitions 13′ between shelves 11′.

It will readily be seen from the foregoing decription of the present invention that simple and effective means have been provided for releasably retaining partitions in shelving. It will further be noted that the initial positioning and retaining of the partitions may be effected by the application of releasable retaining means in the form of pin and clip connectors without requiring the use of tools to effect anchorage of the partitions. It is also possible to effect repositioning of the partition by removing the pin and clip connector and replacing them after the partition has been moved to the desired position.

It will further be noted that should the clips 20 be accidentally displaced from their desired pin retaining position they cannot

fall from the pin but will hang downwardly as indicated in the dotted line showing of Fig. 3. By virtue of this condition the partition 13 will be retained in desired position even though one or more of the clips may be accidentally displaced.

The advantages of the present means for releasably retaining partitions in sheet metal shelving are numerous and it will suffice to say that the simplicity of the device coupled with ready and easy method of installation or adjustment provides a real improvement over known devices of the prior art. In addition to the simplicity of structure and application the present releasable retaining means for positioning the partitions serves to provide a structure of great strength and rigidity which is an essential feature in fabricated sheet metal shelving structure.

While the invention has been described in considerable detail in the foregoing specifications it is understood that various changes may be made in its embodiments without departing from or sacrificing any of the advantages hereinafter claimed.

I claim:—

1. In a sheet metal structure of knock-down type the combination of a perforated member, a second perforated member for releasable attachment thereto, a pin inserted through perforations in said members, a reduced portion on said pin adjacent one extremity thereof, a clip engaging said pin, a slot in said clip in which said reduced portion of said pin is engaged and a face on said clip coacting with said pin to releasably retain said members in attachment.

2. In a sheet metal structure of knock-down type the combination of a perforated member, a second perforated member for releasable attachment thereto, a pin inserted through perforations in said member, a reduced portion on said pin adjacent one extremity thereof, a clip applied to said pin, a slot in said clip engaging said reduced portion of said pin, a curved portion on said clip coacting with said pin to releasably retain the pin within said members, and a second curved portion on said clip coacting with said pin to insure against accidental separation of said pin and clip.

3. In a shelving structure the combination of a plurality of shelves having spaced perforations therein, a flanged partition having perforation in the flanges, means for releasably retaining said partition between said shelves, said means comprising a plurality of pins inserted through the perforations in said shelves and partition, each of said pins having a reduced portion adjacent one extremity thereof, and a clip engaging the reduced portion of each of said pins and coacting therewith to bind the flange of said partition to said shelf.

4. In a shelving structure the combination of a plurality of shelves having spaced apertures adjacent their front and rear margins, a flanged partition having perforations in the flanges, means for releasably retaining said partition between said shelves, said means comprising a plurality of pins, inserted through the apertures in said shelves and partition, a reduced portion on each of said pins adjacent one extremity thereof, a clip having an arched portion engaging the reduced portion of each of said pins, said clip coacting with said pin to bind the flange of said partition to said shelf, and means on said clip to prevent accidental separation of said pin and clip.

5. In a shelving structure the combination of a plurality of shelf members having spaced apertures therein, a flanged partition member having spaced apertures in the flanges, means for releasably connecting said partition and shelves, said means comprising a pin inserted through aligned apertures of said members, a reduced portion adjacent one extremity of said pin, a clip engaging said reduced portion of said pin to releasably retain said pin within said apertures, said clip comprising an irregularly shaped body portion, a pin receiving slot in said body portion, a curved portion on said clip coacting with said pin to releasably retain said pin against separation from said perforated members, and a second curved pin engaging portion on said clip to prevent accidental separation of said clip and said pin.

6. In a sheet metal structure of knock-down type the combination of a perforated member, a second perforated member releasably attached thereto, releasable connecting means therefor comprising a pin inserted through aligned perforations of said members, a reduced portion on said pin, a clip engaging said reduced portion of said pin to releasably retain the same in said members, a keyhole pin receiving slot in said clip having an enlarged opening adjacent one extremity of said clip, a curved portion on said clip adjacent said last named extremity, a second curved portion merging with said first named portion, said second named curved portion terminating in a shoulder to space the same from said shelf, a foot on said shoulder, said foot cooperating with said first named curved portion to provide bearing surface for said clip, said keyhole slot extended longitudinally of said clip through said first and second named curved portions, and said second named curved portion of said clip forming a wedge face cooperating with said pin to releasably retain the same in said perforated members.

7. In a sheet metal structure of knock-down type the combination of a perforated member, a second perforated member for releasable attachment thereto, releasable connecting means therefor comprising a pin inserted

through aligned perforations of said members, a reduced portion on said pin, a clip engaging said reduced portion of said pin to releasably retain the same in said members, a keyhole pin receiving slot in said clip having its enlarged portion adjacent one extremity of said clip, a curved portion on said clip adjacent said last named extremity, a second curved portion merging with said first named portion, said second named curved portion terminating in a shoulder to space the same from said shelf, a foot on said shoulder, said foot cooperating with said first named curved portion to provide bearing surface for said clip, said keyhole slot extending longitudinally of said clip through said first and second named curved portions and said first named curved portion of said clip cooperating with said pin to insure against accidental separation of said clip and pin.

In witness whereof, I hereunto subscribe my name this 18th day of October, 1929.

LLOYD H. FENSTERMAKER.