July 2, 1957 H. A. HUG 2,797,699

AUTOMATIC CUTOFF MECHANISM FOR GAS BURNER

Filed Aug. 21, 1953 2 Sheets-Sheet 1

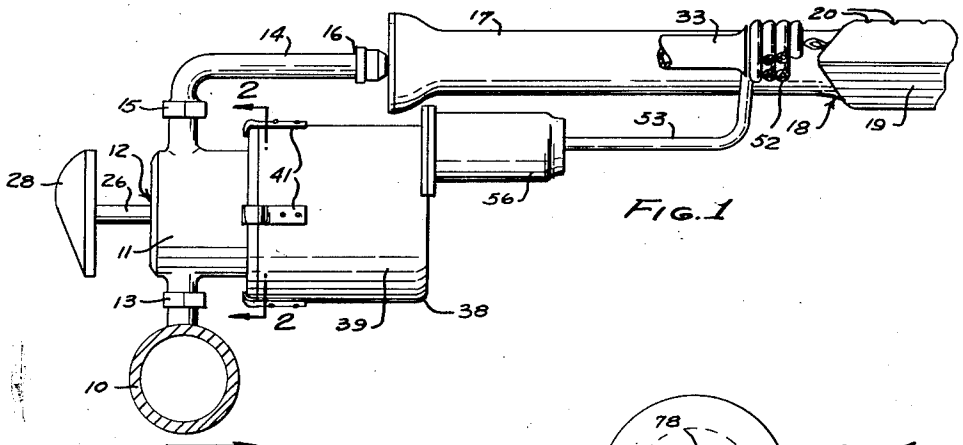

FIG. 1

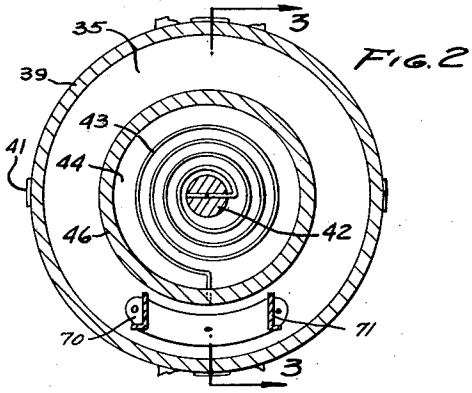

FIG. 2

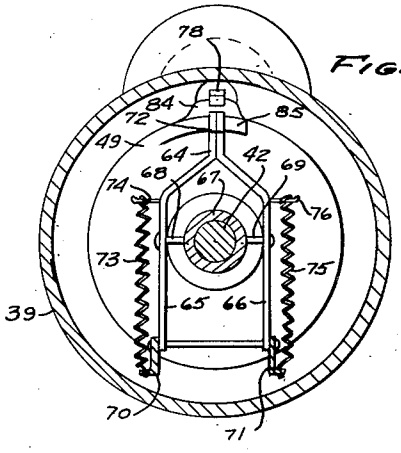

FIG. 4

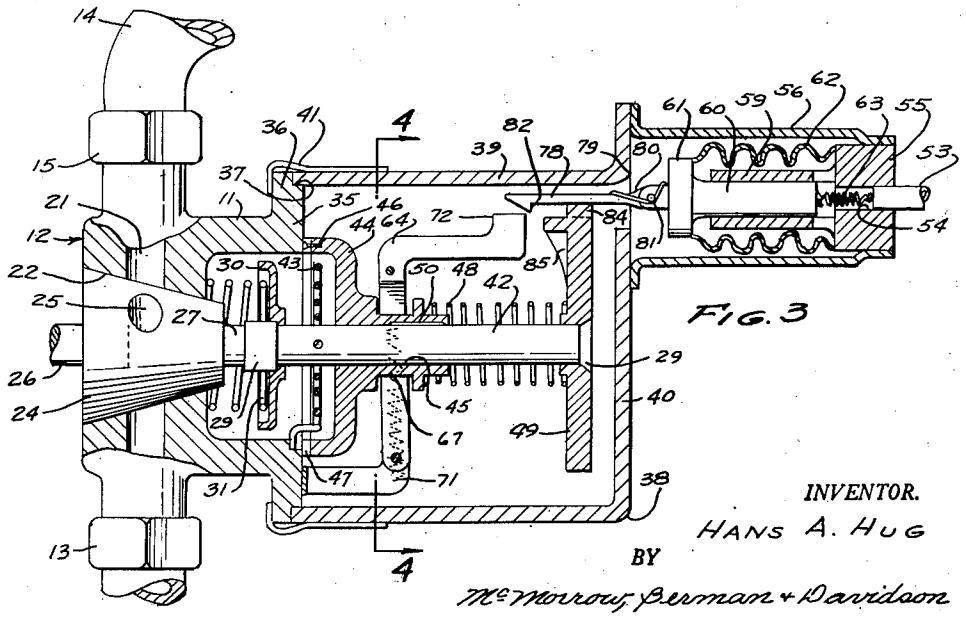

FIG. 3

INVENTOR.
HANS A. HUG
BY
McMorrow, Berman & Davidson
ATTORNEYS

July 2, 1957 H. A. HUG 2,797,699

AUTOMATIC CUTOFF MECHANISM FOR GAS BURNER

Filed Aug. 21, 1953 2 Sheets-Sheet 2

FIG. 5

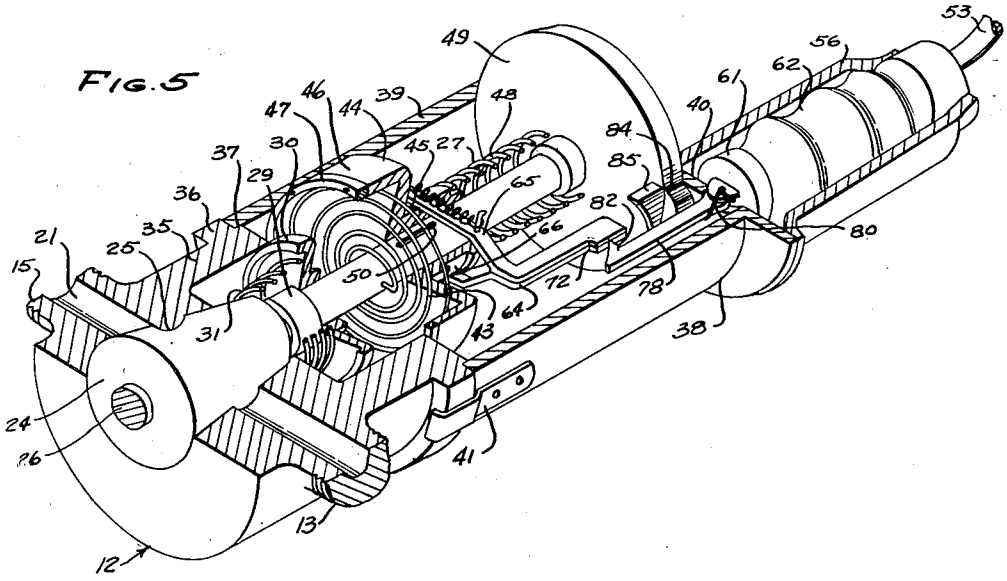

FIG. 6

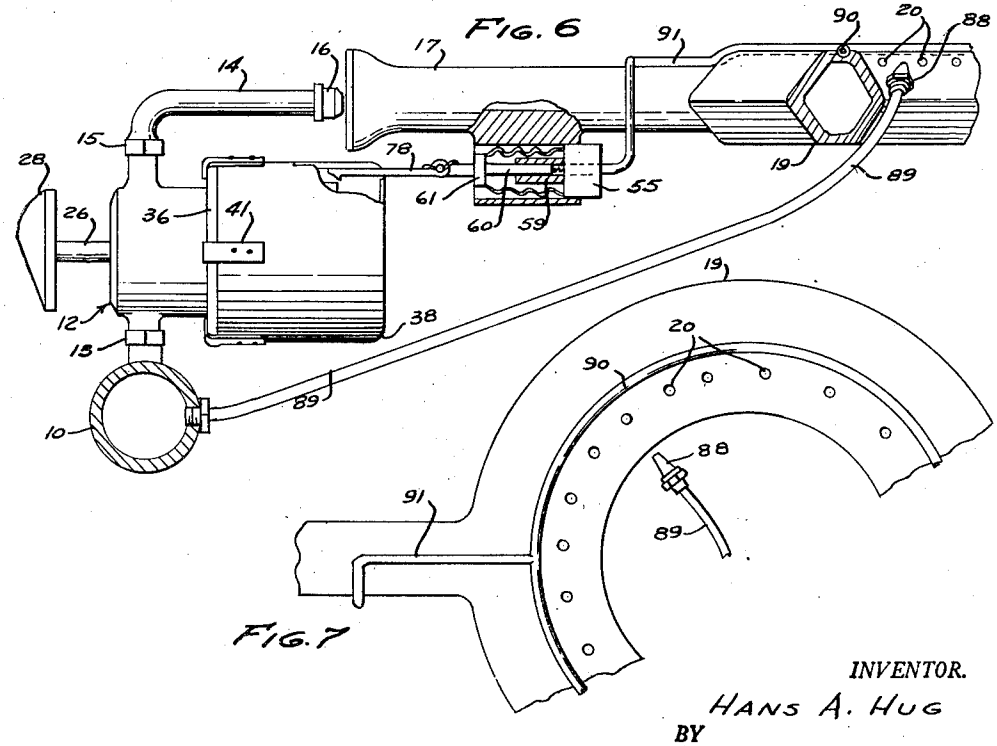

FIG. 7

INVENTOR.
HANS A. HUG
BY
McMorrow, Berman & Davidson
ATTORNEYS

United States Patent Office

2,797,699

Patented July 2, 1957

2,797,699

AUTOMATIC CUTOFF MECHANISM FOR GAS BURNER

Hans A. Hug, Boston, Mass.

Application August 21, 1953, Serial No. 375,793

3 Claims. (Cl. 137—65)

This invention relates to automatic cut off devices for gas burners and more particularly to an automatic cut off for a cookstove burner for cutting off the flow of gas to the burner in the event the burner flame is accidentally extinguished with the burner valve open.

It is among the objects of the invention to provide an improved automatic cut off mechanism for a gas burner, such as a cookstove burner, which will cut off the flow of gas to the burner if the burner flame is accidentally extinguished while the gas control valve is open; which cuts off the gas to the burner by reclosing the gas control valve; which does not interfere with the manual adjustment of the gas control valve to provide the desired height of burner flame; which automatically resets itself for manual adjustment of the control valve at the time it closes the control valve; and which is simple and durable in construction, economical to manufacture and install, and positive and reliable in operation.

Other objects and advantages will become apparent from a consideration of the following description and the appended claims in conjunction with the accompanying drawings, wherein:

Figure 1 is a side elevational view of a gas burner and associated control valve with an automatic cut off mechanism illustrative of the invention connected between the burner and the control valve;

Figure 2 is a transverse cross sectional view on an enlarged scale on the line 2—2 of Figure 1;

Figure 3 is a longitudinal cross sectional view on the line 3—3 of Figure 2;

Figure 4 is a transverse cross sectional view on the line 4—4 of Figure 3;

Figure 5 is a perspective cross sectional view of the gas valve and automatic shut off mechanism therefor;

Figure 6 is a side elevational view of a somewhat modified form of gas valve, burner and automatic cut off assembly; and

Figure 7 is a fragmentary top plan view of the modified form of the invention shown in Figure 6.

With continued reference to the drawings, a gas conduit 10 is connected to one side of the body 11 of a gas control valve, generally indicated at 12, by a union 13 of known construction, and a conduit 14 is connected by a similar union 15 to the other side of the valve body 11. A burner jet 16 extends from the conduit 14 into the open end of the sleeve 17 of a gas burner, generally indicated at 18, having at the other end of the sleeve a hollow ring 19 provided in its upper surface with perforations 20 through which the gas flows to feed the burner flame.

The valve body 11 is provided with a bore 21 extending through the body from the union 13 to the union 15 and with a tapered opening 22 intersecting the bore 21. A tapered valve plug 24 of circular cross sectional shape is disposed in the tapered opening 22 and is provided with a transverse or diametrical passage 25, which, when in registry with the adjacent ends of the bore 21, provides a continuation of the bore 21 through the valve body to

connect the gas line 10 to the conduit 14. When the plug 24 is rotated to a position at which the passage 25 is out of registry with the bore 21, the passage 25 is interrupted and the gas is cut off from the conduit 14, this being the closed position of the valve. The plug may also be turned to various selected positions of partial registry of the ends of the passage 25 with the corresponding ends of the bore 21 to provide restrictions of different degrees through the valve to control the quantity of gas flowing through the valve to the burner 18 and consequently, the height of the burner flame.

A stem 26 extends coaxially from the larger end of the plug 24 and a stem 27 extends coaxially from the smaller end of the plug. A handknob 28 is centrally mounted on the stem 26 to provide means for manually rotating the valve plug 24 to selected positions of adjustment relative to the valve body 11, and an annular enlargement 29 is provided on the outer end of the stem 27 of the valve plug. A washer 30 having a centrally disposed aperture therein is secured on the outer end of the enlargement 29 and provides a spring abutment, and a compression spring 31 surrounds the stem 27 between the washer 30 and the adjacent side of the valve housing 11 to apply to the valve plug 24 a resilient force seating the valve plug in the tapered opening 22.

With the above described arrangement, the valve 12 can be manually opened and the gas ignited at the top of the burner ring 19 to provide the burner flame. The valve can also be adjusted by turning the handknob 28 to regulate the height of the burner flame and, if desired, the burner may be automatically ignited by a pilot flame extending from a pilot tube 33 having one end disposed adjacent the burner ring 19 and its other end connected to a centrally located pilot flame housing, not illustrated. The burner ring has an aperture in the side thereof for directing gas into the adjacent end of the pilot tube when the corresponding burner valve is turned on, and the flashback of this gas ignites the burner.

Under these conditions, the burner will operate satisfactorily as long as the burner flame is not extinguished. However, if the burner flame should be extinguished in some manner, such as by a sudden draft, or by the boiling over of liquid from a cooking utensil disposed above the burner, gas would continue to flow from the burner as long as the valve 12 was left open and could produce a sufficient concentration of gas in the surrounding air to create an explosion when ignited by the pilot flame or by another burner, the flame of which has not been extinguished. Even if an explosion were not occasioned, the escape of gas is always hazardous and unpleasant, and is to be prevented insofar as possible.

The present invention provides mechanism for automatically cutting off the flow of gas to the burner in the event the burner flame is extinguished while the burner control valve is open, and includes an extension 35 on the valve body 11 surrounding the washer 30 and having at its outer end an annular external flange 36 provided in its face remote from the valve body with a peripheral groove 37. A hollow housing 38 has a cylindrical wall 39 received at one end in the annular groove 37 and closed at its other end by an end wall 40. This housing is releasably secured to the valve body 11 by the spring clips 41 angularly spaced apart around the cylindrical wall 39 of the housing at the open end thereof and engaging the side of the annular flange 36 remote from the housing, as illustrated in Figure 2.

A shaft 42 extends at one end through the central aperture in the washer 30, and is secured to the annular enlargement 29 on the stem 27 of the valve plug 24, and this shaft 42 extends into the housing 38. A spiral spring 43 surrounds the shaft 42 adjacent the washer 30

and is secured at its inner end to the shaft 42 and at its onter end to the extension 35 of the valve body 11. This spring 43 resiliently urges the shaft 42 to turn and to turn the valve plug 24 in a direction to close the valve 12. An annular clutch member 44 has a coaxial bore 45 through which the shaft 42 extends and this clutch member has at one end an annular flange 46 which surrounds the spiral spring 43 and is disposed in opposition to the adjacent annular surface of the extension 35 of the valve body 11. A ring 47 of friction material is secured to the flange 46 overlying the surface of this flange opposed to the adjacent surface of the valve body extension 35 and a compression spring 48 surrounds the shaft 42 between the end of the member 44 remote from the flange 46 and a cam disc 49 secured on the shaft 42 at the end of the shaft remote from the valve plug 24 to press the ring 47 of friction material against the adjacent surface of the valve body extension 35 and provide a frictional resistance to turning of the clutch element 44 and the shaft 42.

With this arrangement, when the valve plug 24 is turned by the handknob 28 in a valve opening direction, the spring 43 is wound or stressed and biases the valve plug in the opposite rotational direction back to its valve closing position. Movement of the valve plug by the spring 43 is, however, prevented by the frictional engagement of the friction ring 47 with the adjacent end surface of the valve body extension 35. The friction ring 47 is fixedly secured to the flange 46 of the annular member 44 and the annular member 44 is connected to the shaft 42 for limited sliding movement relative to the shaft and against rotational movement relative to the shaft by suitable means, such as the key 50 disposed in keyways extending longitudinally of the shaft 42 and annular member 44, as illustrated in Figure 3.

Mechanism responsive to the heat of the flame of the burner 19 is connected to the clutch element 44 and comprises a tubular coil 52 disposed between the burner ring 19 and the adjacent end of the pilot tube 33 and connected through a tube 53 to the outer end of a bore 54 in a plug 55 mounted in one end of a sleeve 56 secured at its other end on the end wall 40 of the housing 38. The bore 54 extends through the plug 55 and a tubular extension 59 of reduced diameter extends from the inner end of the plug 55 with its bore in longitudinal alignment with the bore 54 of the plug. The extension or sleeve 59 constitutes a guide for a plunger 60 slidably mounted in this sleeve and provided with a piston formation 61 at a location spaced from the outer end of the extension 59. A longitudinally expansible sleeve 62 of suitable resilient material, such as bronze or brass circumferentially corrugated, is secured at one end to the periphery of the piston formation 61 and at its other end to the peripherey of the plug 55.

The tubular ring 52 and the tube 53 are filled with a suitable heat expansible material, such as alcohol, and, when the flame of the burner 18 is ignited, the ring 52 is heated, expanding the material therein and forcing the plunger 60 and piston formation 61 in a direction away from the plug 55 and toward the end wall 40 of the housing 38.

If the burner flame is extinguished, the longitudinally expansible sleeve 62 contracts with the assistance of a spring 63 connected between the plug 55 and the plunger 60 to produce a force somewhat greater than the force of the spring 48, pulling the plunger 60 and piston formation 61 in a direction toward the plug 55 and away from the end wall 40 of the housing 38, for a purpose which will presently appear.

A bifurcated lever 64 has spaced apart and substantially parallel legs 65 and 66 disposed at respective opposite sides of the diametrically reduced end portion 67 of the annular member 44 adjacent the spring 48 and pivotally connected to this diametrically reduced end portion of the annular clutch member by suitable means, such as the pivot pins 68 and 69. These lever legs 65 and 66 are

spaced apart at one end of the lever and are pivotally connected at this end of the lever to the outer ends of brackets 70 and 71 secured to and extending outwardly from the outer end surface of the extension 35 of the valve body 11. The lever 64 and the brackets 70 and 71 are all disposed within the cylindrical side wall 39 of the housing 38 and, at the end of the lever remote from the brackets 70 and 71, the lever legs 65 and 66 are brought together and are extended from this end of the lever toward the end wall 40 of the housing 38, and provided with a detent formation 72 disposed adjacent the inner surface of the cylindrical side wall 39 of the housing 38.

A toggle spring 73 is connected between the outer end of the bracket 70 and a pin 74 projecting outwardly from the outer side of the lever leg 65 between the pivot pin 68 and the closed end of the lever, and a similar toggle spring 75 is connected at one end to the outer end of the bracket 71 and at its other end to a pin 76 projecting from the outer side of the lever leg 66 between the pivot pin 69 and the closed end of the lever.

An arm 78 is pivotally connected at one end to the end of the plunger 60 remote from the plug 55 and extends through an aperture 79 in the end wall 40 of the housing 38 and past the periphery of the cam disc 49. A torsion spring 80 connected between the arm 78 and the plunger 60 at the pivotal connection 81 between the arm and the plunger holds the arm firmly against the peripheral surface of the cam disc 49, and a dog 82 is provided on the side of the arm 78 adjacent the detent 72 at the side of the cam disc 49 remote from the housing end wall 40.

When the heat responsive ring 52 is heated up and the plunger 60 forced away from the plug 55, as explained above, the arm 78 is moved inwardly of the housing 38 until the dog 82 is positioned at the side of the detent 72 remote from the cam disc 49. At this time, a peripheral cam 84 on the cam disc will have moved away from the arm 78 by manual opening of the valve 12, so that the dog 82 will engage the detent 72.

Under these conditions, if the burner flame is extinguished while the valve 12 is still open, the pressure exerted by the heat expansible material in the ring 52 and tube 53 on the piston 61 will be released and the longitudinally expansible sleeve 62 and spring 63 will contract, pulling the arm 78 outwardly of the housing 38. The dog 82 on the arm 78 engaging the detent 72 on the lever 64 at this time swings the lever about its pivotal connection with the brackets 70 and 71 until the pins 74 and 76 are moved outwardly of the line of pull of the toggle springs 73 and 75, so that these toggle springs will then act to resiliently urge the lever 64 in a direction toward the cam disc 49. The lever 64 will then exert a force on the annular clutch member 44, moving this member against the force of spring 48 in a direction away from the outer end surface of the valve body extension 35 and releasing the frictional engagement between the friction ring 47 and the opposed surface of the valve body extension. With this friction released, the spring 43 will immediately turn the shaft 42 and the valve plug 24 to the valve closing position of the valve plug, thereby cutting off further flow of gas through the valve to the burner 18.

When the shaft 42 turns the valve plug 24 to its valve closing position, it also turns the cam disc 49, bringing the peripheral cam 84 of the cam disc against the arm 78 to release the dog 82 from the detent 72, and bringing a tapered cam 85 on the side of the cam disc 49 adjacent the lever 64 into engagement with the outer end of the detent 72, returning the lever 64 to its original position in which the toggle springs 73 and 75 assist the compression spring 48 in applying pressure to the friction ring 47. The cut off mechanism is now reset, and when the valve 12 is again manually opened, this valve will be maintained in various selected positions of rotational adjustment to which it is manually moved and

will be automatically reclosed if the burner flame is again extinguished.

In the modified arrangement illustrated in Figures 6 and 7 there are no pilot tubes **33** and each burner is provided with its individual pilot including a pilot flame nozzle **88** disposed adjacent the upper surface of the burner ring and connected directly to the main gas conduit **10** by a tubular conduit **89**. In this case the heat responsive element, instead of a tubular coil **52** as in the first described form of the device, comprises a tubular ring **90** extending around the top surface of the burner ring **19** adjacent the flame apertures **20** and connected to the outer end of the bore **54** in the plug **55** by a tubular conduit **91**. Otherwise the modified form of the invention is the same as that illustrated in Figures 1 to 5 inclusive and described above.

The invention may be embodied in other specific forms without departing from the spirit or essential characteristics thereof. The present embodiments are, therefore, to be considered in all respects as illustrative and not restrictive, the scope of the invention being indicated by the appended claims rather than by the foregoing description, and all changes which come within the meaning and range of equivalency of the claims are, therefore, intended to be embraced therein.

What is claimed is:

1. A safety valve for gas burners comprising: a valve body; a valve plug mounted in the body for rotatable movement between open and closed positions; a shaft connected to the plug for rotation therewith to said positions; spring means associated with the shaft and plug tensioned to normally rotate the shaft and plug to the closed position; means connected to the shaft against rotation relative thereto and spring biased longitudinally of the shaft into engagement with the body to hold the shaft and plug against rotation under the force of the spring means to said closed position; heat-responsive means mounted on said body and adapted to deflect to a first position when heated and to a second position when cooled; a pair of complementary latch elements one associated with the shaft holding means and the other with the heat-responsive means, said latch elements deflecting with the heat-responsive means on cooling of said heat-responsive means and resultant deflection thereof from the first to the second positions thereof, whereby to free the shaft and plug for rotation to said closed position under pressure of the spring means; and cam means rotatable with the shaft and arranged to disconnect the elements on rotation of the shaft and plug to said closed position, thus to free the shaft holding means for return movement into engagement with the valve body.

2. A safety valve for gas burners comprising: a valve body; a valve plug mounted in the body for rotatable movement between open and closed positions; a shaft connected to the plug for rotation therewith to said positions; spring means associated with the shaft and plug tensioned to normally rotate the shaft and plug to the closed position; means connected to the shaft against rotation relative thereto and spring biased longitudinally of the shaft into engagement with the body to hold the shaft and plug against rotation under the force of the spring means to said closed position; heat-responsive means mounted on the body and adapted to deflect to a first position when heated and to a second position when cooled; a pair of complementary latch elements one associated with the shaft holding means and the other with the heat-responsive means, said latch elements deflecting with the heat-responsive means on cooling of said heat-responsive means and resultant deflection thereof from the first to the second positions thereof, whereby to free the shaft and plug for rotation to said closed position under pressure of the spring means; and cam means rotatable with the shaft and arranged to disconnect the elements on rotation of the shaft and plug to said closed position, thus to free the shaft holding means for return movement into engagement with the valve body, said heat-responsive means deflecting between said first and second positions thereof in a direction paralleling the axis of rotation of the shaft and the path of movement of the shaft holding means longitudinally of the shaft, to bodily shift the latch elements in said direction when the elements are moving the shaft-holding means out of engagement with the valve body, said cam means extending across said path when rotated by the shaft to bias one of the latch elements laterally out of engagement with the other when the elements are to be disconnected.

3. A safety valve for gas burners comprising: a valve body; a valve plug mounted in the body for rotatable movement between open and closed positions; a shaft connected to the plug for rotation therewith to said positions; spring means associated with the shaft and plug tensioned to normally rotate the shaft and plug to the closed position; means connected to the shaft against rotation relative thereto and spring biased longitudinally of the shaft into engagement with the body to hold the shaft and plug against rotation under the force of the spring means to said closed position; heat-responsive means mounted on the body and adapted to deflect to a first position when heated and to a second position when cooled; a pair of complementary latch elements one associated with the shaft holding means and the other with the heat-responsive means, said latch elements deflecting with the heat-responsive means on cooling of said heat-responsive means and resultant deflection thereof from the first to the second positions thereof, whereby to free the shaft and plug for rotation to said closed position under pressure of the spring means; and cam means rotatable with the shaft and arranged to disconnect the elements on rotation of the shaft and plug to said closed position, thus to free the shaft holding means for return movement into engagement with the valve body, said heat-responsive means deflecting between said first and second positions thereof in a direction paralleling the axis of rotation of the shaft and the path of movement of the shaft holding means longitudinally of the shaft, to bodily shift the latch elements in said direction when the elements are moving the shaft-holding means out of engagement with the valve body, said cam means extending across said path when rotated by the shaft to bias one of the latch elements laterally out of engagement with the other when the elements are to be disconnected, said one latch element being pivotally connected to the heat-responsive means for swinging movement transversely of the direction of deflection of the heat-responsive means, to effect the lateral biasing of said one latch element.

References Cited in the file of this patent

UNITED STATES PATENTS

672,990	Shoemaker	Apr. 30, 1901
804,509	Ury	Nov. 14, 1905
1,295,495	Hein	Feb. 25, 1919
1,779,118	Deters	Oct. 21, 1930
1,930,007	Franzen	Oct. 10, 1933
2,567,123	Ray	Sept. 4, 1951