May 23, 1950 N. O. BRANTLY 2,509,184

ROTARY WING BLADE

Filed June 27, 1946 4 Sheets-Sheet 1

Fig. 1.

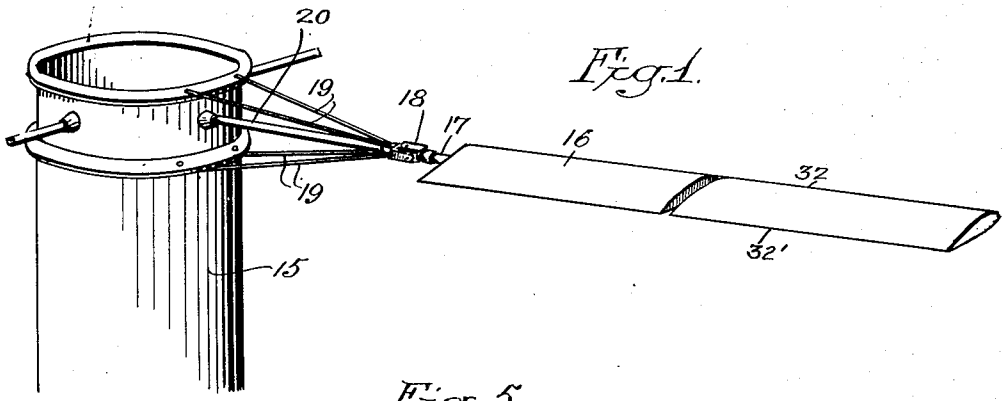


Fig. 5.

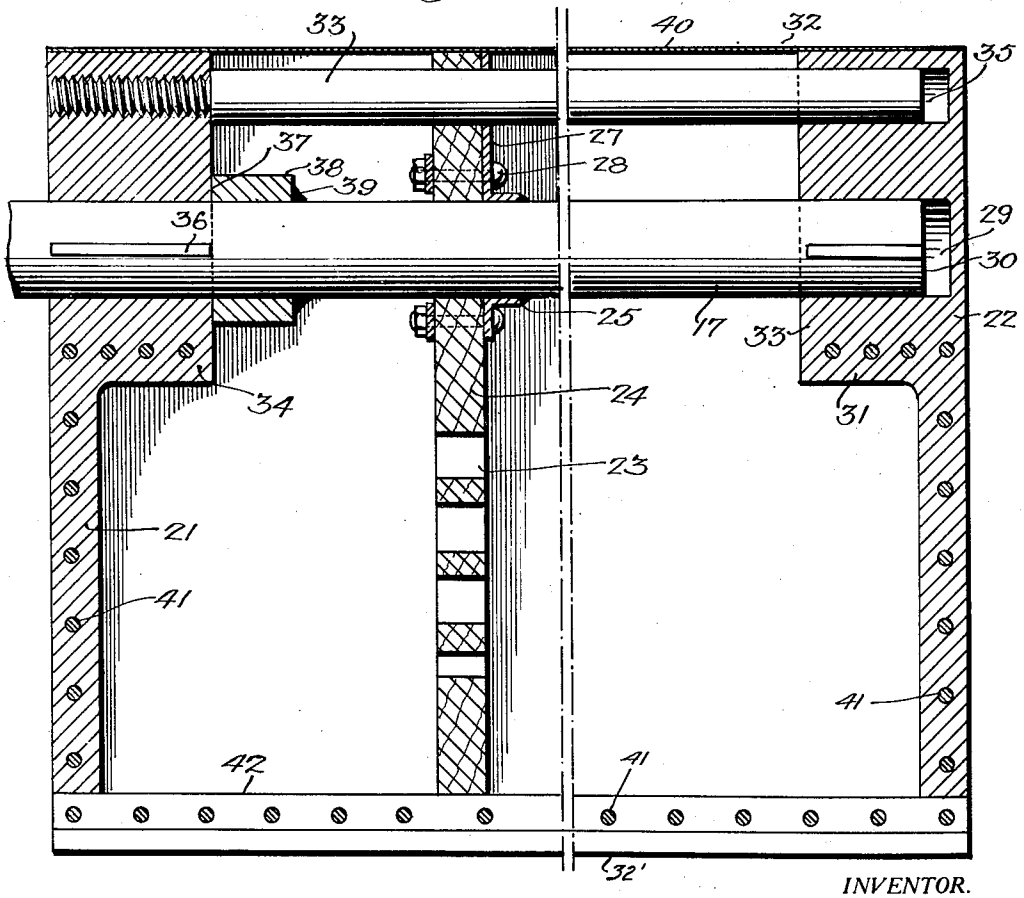


INVENTOR.
Newby O. Brantly
BY
Jackson and Son
ATTORNEYS

May 23, 1950 N. O. BRANTLY 2,509,184

ROTARY WING BLADE

Filed June 27, 1946 4 Sheets-Sheet 2

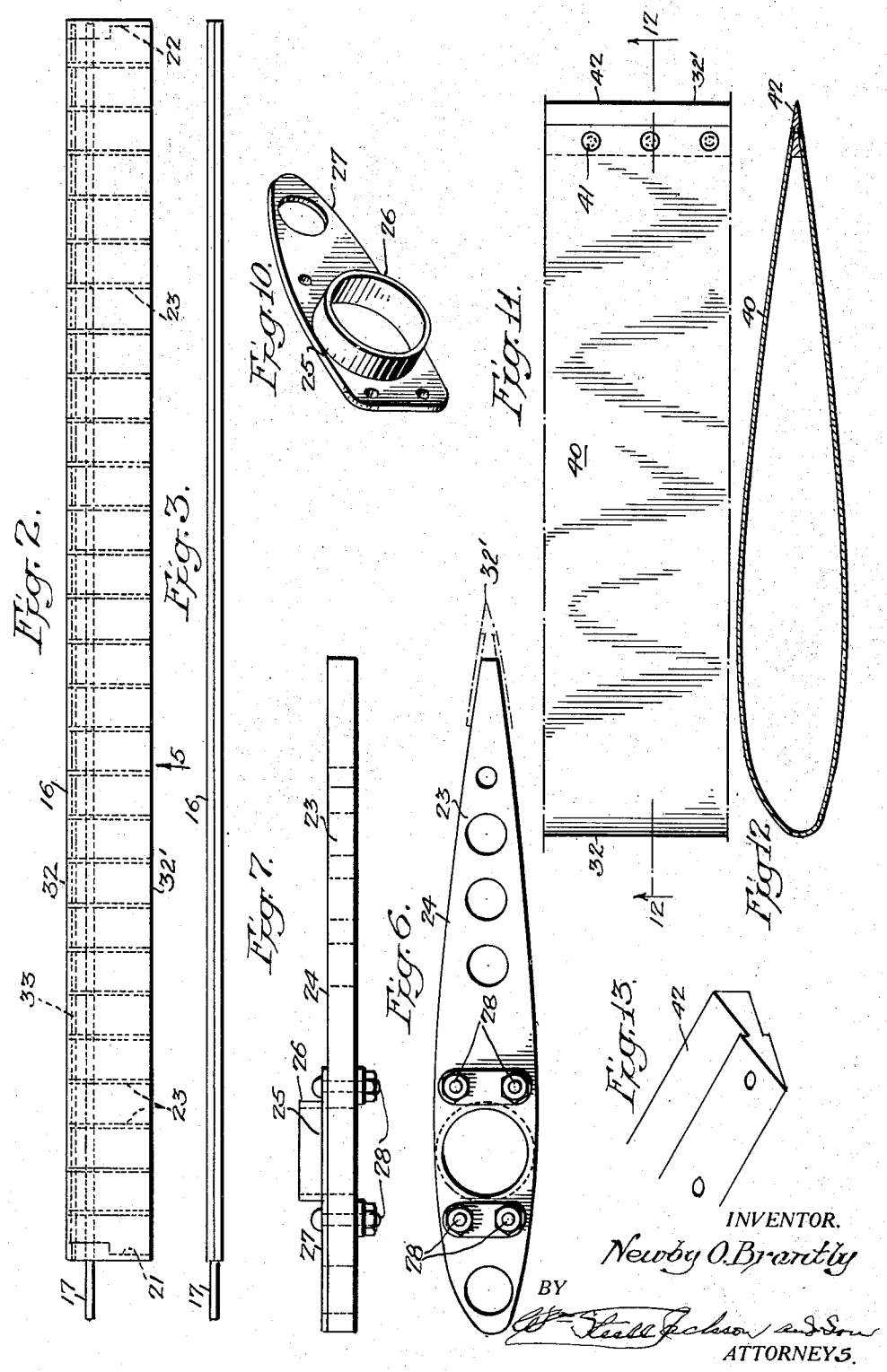


INVENTOR.
Newby O. Brantly
BY
Wm. Steele Jackson and Son
ATTORNEYS.

May 23, 1950 N. O. BRANTLY 2,509,184

ROTARY WING BLADE

Filed June 27, 1946 4 Sheets-Sheet 3

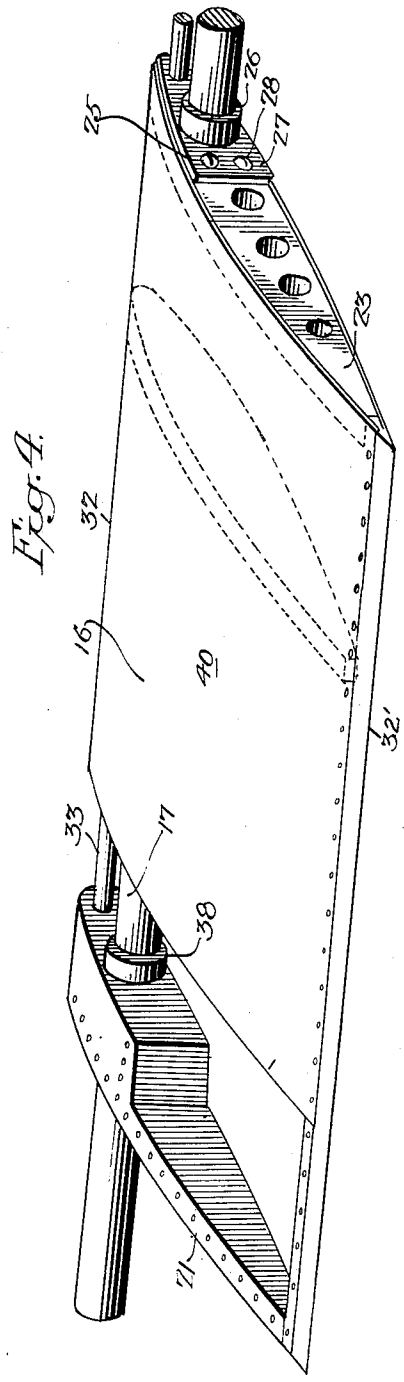


Fig. 4.

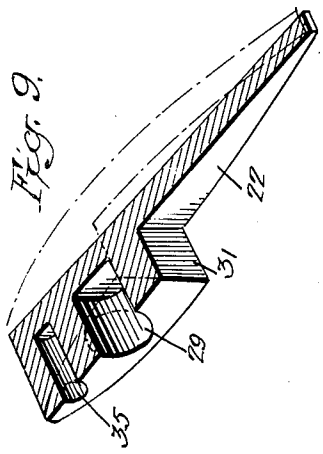


Fig. 9.

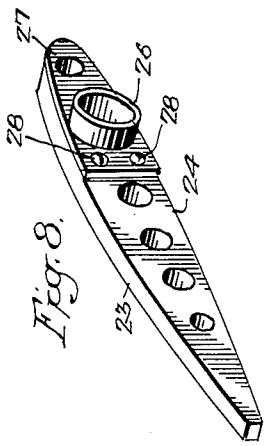


Fig. 8.

INVENTOR
Newby O. Brantly
BY
Russell Jackson and Son
ATTORNEYS.

May 23, 1950 N. O. BRANTLY 2,509,184

ROTARY WING BLADE

Filed June 27, 1946 4 Sheets-Sheet 4

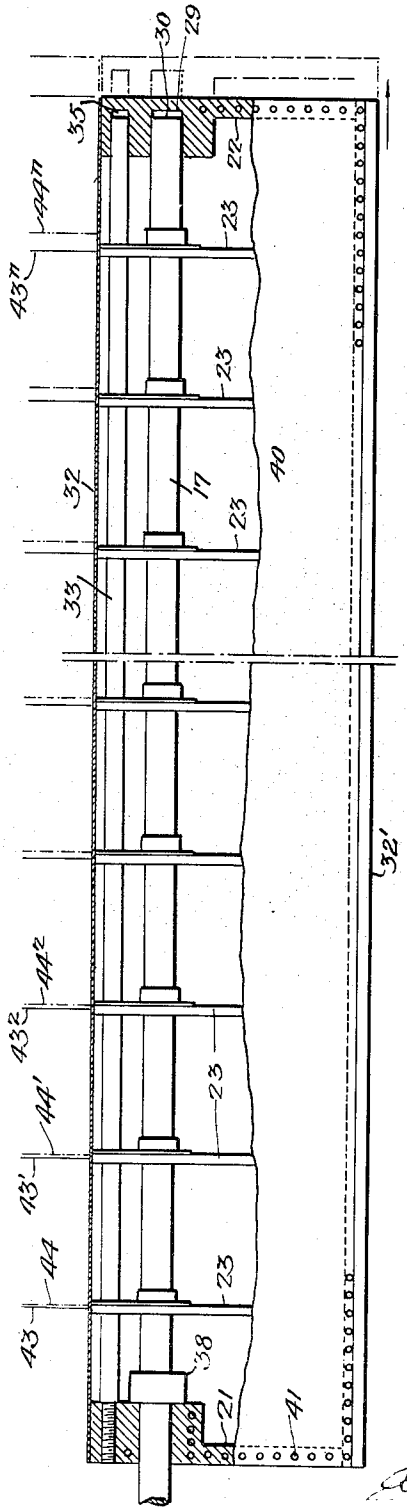


Fig. 14.

INVENTOR
Newby O. Brantly.
BY
Thos. Scott Jackson and Son
ATTORNEYS

Patented May 23, 1950 2,509,184

# UNITED STATES PATENT OFFICE

2,509,184

## ROTARY WING BLADE

Newby O. Brantly, Berwyn, Pa., assignor to Kite Aircraft Corporation, Philadelphia, Pa., a corporation of Pennsylvania

Application June 27, 1946, Serial No. 679,790

6 Claims. (Cl. 170—159)

1

My invention relates to a blade capable of use in other locations but intended primarily for use in helicopters.

The main purpose of my invention is to take care of differences in expansion or contraction between the frame of the blade and the skin or cover. The differences in expansion are due not only to differences in exposure to temperature changes and to weather conditions but to the difference in the coefficients of expansion of the individual materials employed.

A further purpose is to tie the skin or cover of a blade to an end rib of a spar at one point and to provide for different extents of expansion or contraction longitudinally of the blade elsewhere.

A further purpose is to support the blade primarily from a spar and to balance the blade by a balancing bar or other counterbalancing mechanism which is capable of movement longitudinally with respect to the skin or cover.

A further purpose is to use end ribs as anchorages or mounts for a blade skin or cover and permit free movement of the other parts of the blade as a unit along the spar within the skin or cover.

Further purposes will appear in the specification and in the claims.

Figure 1 is a perspective view of a driving column for a helicopter connected with a helicopter blade by a spar and an universal joint.

Figure 2 is a top plan view of a helicopter blade.

Figure 3 is an edge or side elevation of the helicopter blade of Figure 2, looking into the blade in the direction of the arrow in Figure 5.

Figure 4 is a perspective view of one end of the blade of Figures 1, 2, and 3 with a portion of the cover or skin broken away.

Figure 5 is a longitudinal central section of a helicopter blade through the length of its supporting spar showing portions of the blade at the ends and omitting the intervening central parts of the blade.

Figure 6 is a side elevation of one of the intermediate ribs of the blade.

Figure 7 is a top plan view of the rib of Figure 6.

Figure 8 is a perspective view of an interior rib permissibly wooden, shown in Figures 6 and 7.

Figure 9 is a longitudinal section through the center of the outer end rib, the remainder of the figure showing in dot and dash.

Figure 10 is a perspective view of a metal attachment secured to the wooden rib of Figure

2

6 or 7 to permit attachment of the wooden rib to the spar.

Figure 11 is a fragmentary side elevation showing a portion of the skin or cover forming the entire exterior surface of the blade and permissibly made of a continuous sheet of metal, and showing also an attachment edge for the sheet.

Figure 12 is a section of Figure 11 upon line 12—12 of Figure 11.

Figure 13 is a fragmentary perspective of the joint by which the edges of the skin or cover are united.

Figure 14 is a diagrammatic sectional view showing extents of expansion.

In the drawings like numerals indicate like parts.

In Figure 1 a vertical column 15 is shown which is rotated by the driving mechanism of a helicopter. At its upper end it carries a plurality of helicopter blades 16 each connected with the driving column by a spar 17 whose connection with the helicopter column is made through a universal joint 18, suitable stays 19 and blade adjusting means 20.

No novelty is claimed for this construction which therefore has not been shown in detail and needs no further description. It is sufficient to state that the blades not only are driven at the same angular rate as the column but also may be rotated concurrently each about the axis of its spar, to present the blades to the air at the same angle each at any one time but giving different lifting capacities for the blades according to the angle at which all of the blades are set.

Each spar 17 carries a blade by means of end ribs 21 and 22 and intermediate ribs 23. Only one of the end ribs is shown in Figure 4 but both are shown in Figures 2 and 5.

The end ribs 21 and 22 are preferably metal ribs, permissibly of aluminum alloy, whereas the intermediate ribs 23 are composite ribs, made up of wooden bodies 24 and metal mountings 25. The mountings are formed preferably of hubs 26 and plate flanges 27, the latter held in place upon the bodies by bolts 28.

The outer end rib 22 affords an expansion space or socket 29 for the outer end 30 of the spar 17. The socket lies in a hub 31. The spar expands and contracts into and from this socket according to the difference of the expansion and contraction of the interior frame and the skin.

Because each blade extends to a very much larger distance rearward, opposite to the direction of its intended movement through the air,

i. e., toward the rear edge or heel 32' than toward the front edge 32, I follow an existing practice of inserting a relatively heavy balancing bar 33 extending parallel to the spar as a counterbalance, to secure equalization at the front and at the back of the blade. This equalizing or balancing bar is threaded into a boss 34 in which the spar is fastened, and ends in an expansion chamber 35 in hub 31 within the outer end rib 22. It makes sliding engagement with the intermediate ribs and with the outer end rib.

The hub 34 is capable of longitudinal movement upon the spar, and the spar is splined at 36 with respect to the hub to permit this while not permitting rotation. The hub 34 is prevented from moving outwardly on the spar notwithstanding the centrifugal pressure to throw it outwardly, by engagement with the inward end 37 of a collar 38, which is welded to the spar at 39.

The metal mountings of the wooden ribs are welded to the spar through their hubs and maintain the wooden rib bodies in their preset sequence longitudinally of the blades and the angular positions of these ribs about the spar.

The metal outer casing or skin 40 is attached in any suitable way as by rivets 41 to the end ribs 21 and 22 and to an edge piece 42 to which the edges of the cover or skin are united.

The inner end rib can not revolve upon the spar and is held from excessive movement along the spar because in operation centrifugal pressure forces the inner end rib against the collar 38; but the cover or skin is allowed to expand or contract freely from and toward the inner end rib; with the result that the outer end rib moves away from and toward the inner end rib. This takes place at a different rate of expansion from that of the spar and balancing bar, resulting in the outer ends of the spar and bar entering the expansion chambers in the outer end rib to different extents with different expansions of the skin and frame respectively.

As the skin and frame expand differently the skin slides over the intermediate ribs to extents which vary with the distances of the intermediate ribs from the inner end rib, which distances are shown diagrammatically in Figure 14 by the difference at the respective intermediate ribs between the full lines 43, 43', $43^2$ to $43^n$ which are opposite centers of the ribs, and the dot and dash lines 44, 44', $44^2$ to $44^n$ which lie at the right hand of the full lines respectively.

The maximum position of the outer end rib and of the cover or skin attached to it are shown at the extreme right of this Figure 14.

As will be seen from Figure 14, the skin and the framework are free to expand independently to any different ultimate expansion represented by the depth of the expansion chambers in the outer end rib, making it possible to suit the expansion ranges of any different metals or other materials.

The collar upon the spar takes the thrust in a direction radially outward from the axis of the column.

My invention avoids stresses and strains between the spar, the intermediate ribs and the end ribs on the one hand and the skin or cover on the other, and the separate expansion of these several parts, and at the same time provides a more or less continuous and equal support of the skin or cover. The intermediate ribs are welded to the spar at 38.

The skin is supported mechanically by the intermediate ribs, from point to point notwithstanding that it slides freely over these ribs.



It will be noted also that though the skin slides over the surface of the respective intermediate ribs, these intermediate ribs continue to fit and support the interior of the skin at all times, giving the same affect of proper interior support to the skin as if the skin did not slide over the intermediate ribs.

It will be evident that I spline a controlling rib to the spar and thus determine the angular position of the blade with respect to the spar, that I press this rib against the stop to set the radial position of the blade and that I unite the skin of the blade to the end ribs only, supporting the intermediate part of the skin upon ribs which are not united to the skin, resulting in free longitudinal movement of the skin with respect to the spar.

It will be evident that freedom of expansion of the skin from a fixed point only longitudinally of the blade avoids stresses and strains in the skin as well as in the spar and intermediate ribs and equalizes the stress and strain throughout the entire blade.

It will be evident that the ability to preset the position of the blade both angularly and radially by the splining and by the stop simplifies standardization of the blade and simplifies manufacture of the individual planes.

It will be evident that the sleeve fastened to the spar and used as a stop is only one of many forms of stop which might be used.

In view of my invention and disclosure variations and modifications to meet individual whim or particular need will doubtless become evident to others skilled in the art, to obtain all or part of the benefits of my invention without copying the structure shown, and I, therefore, claim all such insofar as they fall within the reasonable spirit and scope of my claims.

Having thus described by invention what I claim as new and desire to secure by Letters Patent is:

1. In a helicopter blade, a lone spar, an end rib fixed against rotation about the spar and against longitudinal movement with respect to the spar during rotation of the blade and having a hub, a balancing bar fixed in the hub and extending generally along the length of the spar, a second end rib having a hub provided with expansion chambers for the ends of the spar and balancing bar, intermediate ribs attached to the spar and a skin attached to the two end ribs and sliding over the intermediate ribs with change of the relative lengths of the spar and skin.

2. In a helicopter blade, a framework comprising a spar, a collar fastened to the spar, an inner end rib having a hub splined to the spar and, in use, centrifugally driven against the collar, an outer rib floating on the spar without longitudinally effective connection in the neighborhood of the rib and having a hub, a plurality of composite intermediate ribs having non-metallic bodies and metallic attaching means welded to the spar, and a balancing bar, the spar and bar terminating within expansion spaces in the hub of the outer end rib.

3. A helicopter blade comprising a spar, blade end ribs, one longitudinally attached to the spar during rotation of the blade and the other free from any longitudinally effective connection to the spar, a skin connecting the end ribs and a plurality of intermediate ribs fixed to the spar

free from attachment to the skin and supporting the skin.

4. In a helicopter blade, a spar, a stop fastened to the spar, an inner end rib splined to the spar and adapted to be pressed against the stop by centrifugal force, an outer end rib at the opposite end of the spar, free of any longitudinally effective connection with the spar in the outer part of the length of the spar, a plurality of intermediate ribs rigidly secured to the spar, a balancing bar in front of and extending generally along the length of the spar and a skin fastened to the two end ribs and slidable along the surfaces of the intermediate ribs.

5. In a helicopter blade, a spar, an end rib fixed against rotation about the spar and against longitudinal movement with respect to the spar during rotation of the blade and having a hub, a balancing bar fixed in the hub and extending generally along the length of the spar, a second end rib at the opposite end of the spar having a hub provided with expansion chambers for the ends of the spar and balancing bar and free from longitudinally effective connection with the spar in the neighborhood of that end, intermediate ribs attached to the spar and a skin attached to the two end ribs and sliding over the intermediate



ribs with relative expansion of the spar and skin.

6. In a helicopter blade, a lone spar, two end ribs one of which during revolution of the blade is in fixed position on the spar and the other of which is transversely positioned by the spar but longitudinally unconnected thereto, an airfoil skin extending between the two end ribs and connected thereto, and intermediate ribs fixed to the spar and transversely supporting the skin but longitudinally unconnected thereto, whereby, despite temperature-induced longitudinal expansion and contraction of the skin relative to the spar, the blade maintains substantial freedom from resultant additional longitudinal stress.

NEWBY O. BRANTLY.


## REFERENCES CITED

The following references are of record in the file of this patent:

UNITED STATES PATENTS

| Number | Name | Date |
|---|---|---|
| 1,340,154 | Carns | May 18, 1920 |
| 1,949,785 | LaCierva | Mar. 6, 1934 |
| 2,272,439 | Stanley et al. | Feb. 10, 1942 |
| 2,412,908 | Patt et al. | Dec. 17, 1946 |