Jan. 9, 1923. **1,441,517**

A. MISKUNAS.
MACHINE GUN.
FILED NOV. 5, 1921.

4 SHEETS-SHEET 1

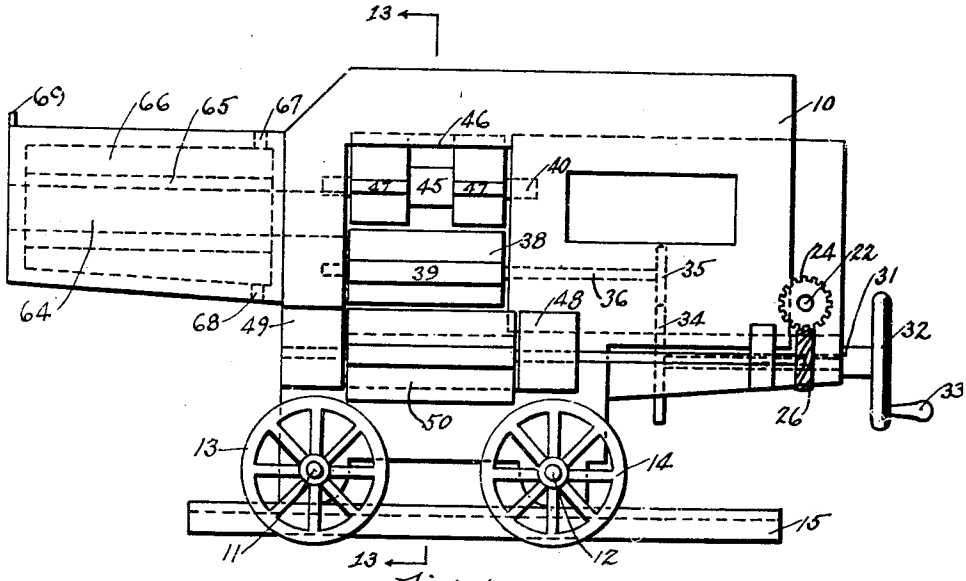

Fig. 1.

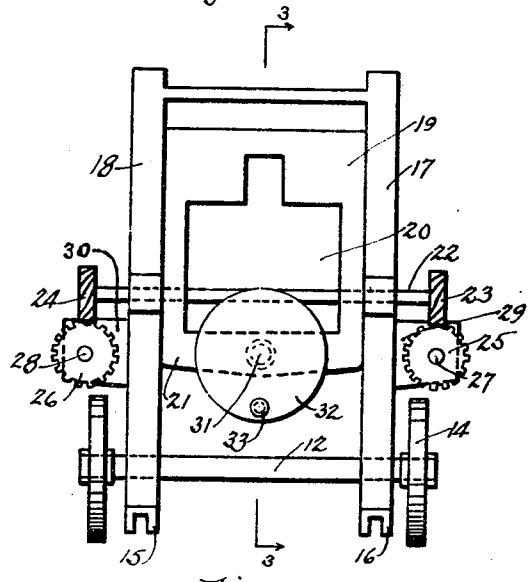

Fig. 2.

INVENTOR.
Anton Miskunas
BY
George C. Heinicke
ATTORNEY

Jan. 9, 1923. 1,441,517

A. MISKUNAS.
MACHINE GUN.
FILED NOV. 5, 1921. 4 SHEETS-SHEET 2

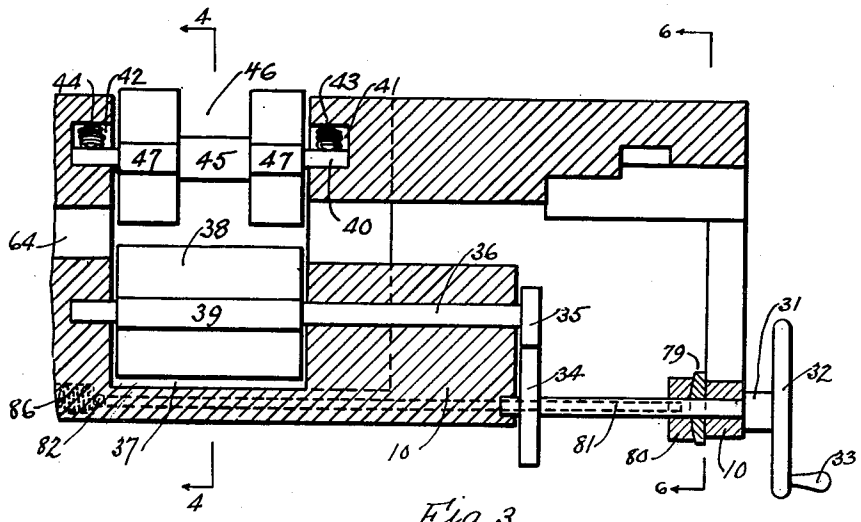

Fig. 3

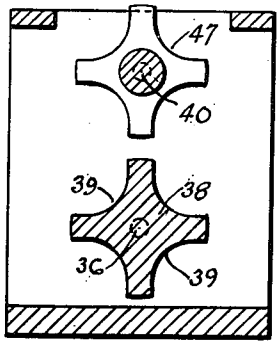

Fig. 4

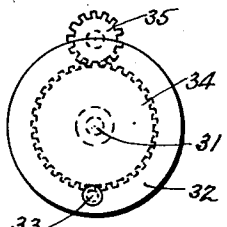

Fig. 5

INVENTOR.
Anton Miskunas
BY
George E. Heinicke
ATTORNEY

Jan. 9, 1923. 1,441,517

A. MISKUNAS.
MACHINE GUN.
FILED NOV. 5, 1921. 4 SHEETS-SHEET 3

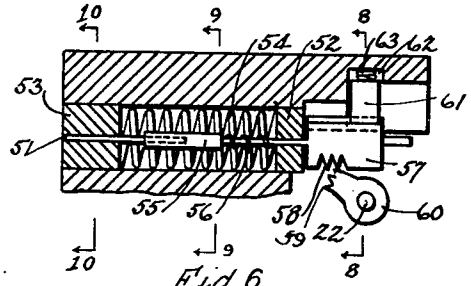

Fig. 6.

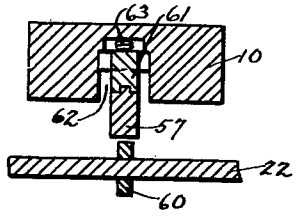

Fig. 7.

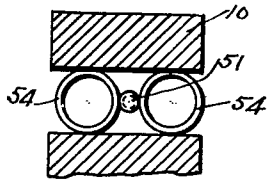

Fig. 8

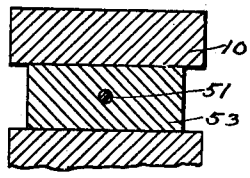

Fig. 9

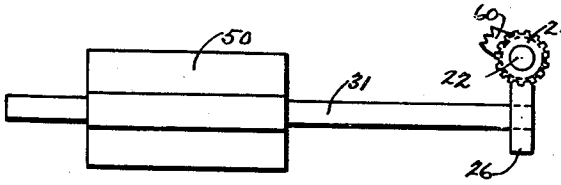

Fig. 10

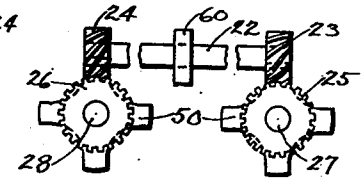

Fig. 11.

INVENTOR.
Anton Miskunas
BY
George C. Heinicke
ATTORNEY

Jan. 9, 1923.

1,441,517

A. MISKUNAS.
MACHINE GUN.
FILED NOV. 5, 1921.

4 SHEETS-SHEET 4

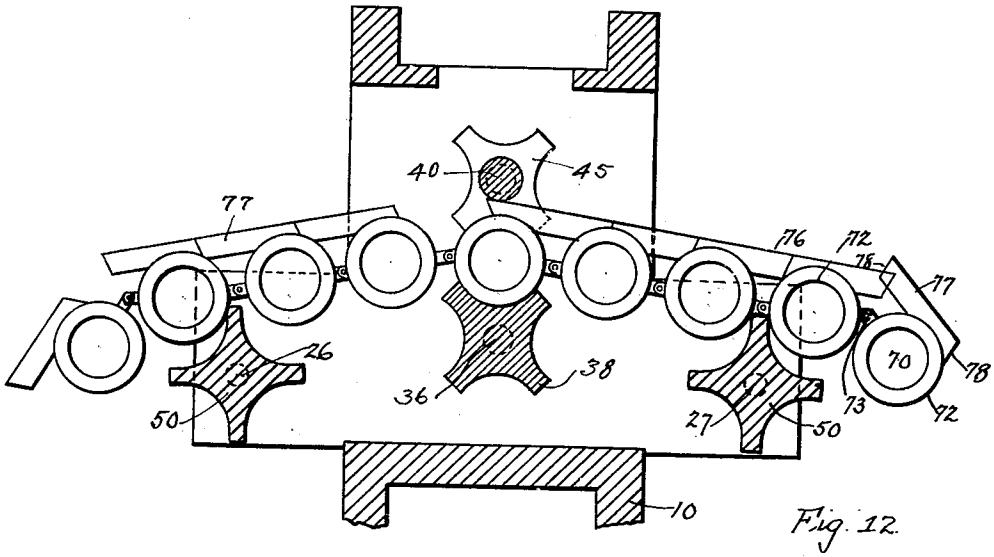

Fig. 12.

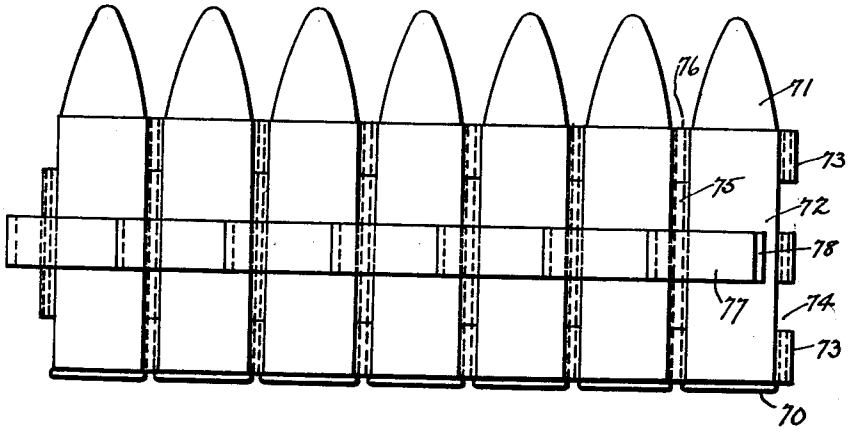

Fig. 13

INVENTOR.
Anton Miskunas
BY
George C. Heinicke
ATTORNEY

Patented Jan. 9, 1923. 1,441,517

UNITED STATES PATENT OFFICE.

ANTON MISKUNAS, OF OGLESBY, ILLINOIS.

MACHINE GUN.

Application filed November 5, 1921. Serial No. 513,100.

To all whom it may concern:

Be it known that I, ANTON MISKUNAS, a citizen of Lithuania, residing at Oglesby, county of La Salle, and State of Illinois, have invented certain new and useful Improvements in Machine Guns, of which the following is a specification.

This invention relates to improvements in machine guns, particularly guns to be used in the construction of machine gun nests, on ship board or for defensive purposes.

It is the principal object of the invention to provide a machine gun of this character which is capable of being continuously operated at its maximum speed without liability of jamming or of being otherwise rendered inoperative.

Another object of the invention is the provision of a machine gun in which the operation of the drums feeding the cartridge tape or belt operates the hammer or trigger mechanism.

The invention more particularly consists in certain novel features of construction and in the combination and arrangement of these features as more fully described in the following description and more specifically pointed out in the appended claims.

In the accompanying drawings forming a material part of this disclosure,

Figure 1 is a side view of a machine gun constructed according to the present invention.

Figure 2 is an end view thereof.

Figure 3 is a longitudinal section on line 3—3 of Figure 2.

Figure 4 is a transverse section on line 4—4 of Figure 3.

Figure 5 is a detail front view of the operating crank wheel and co-operating parts.

Figure 6 is a detail sectional view of the trigger and recoil mechanism.

Figure 7 is a section on line 8—8 of Figure 6.

Figure 8 is a section on line 9—9 of Figure 6.

Figure 9 is a section on line 10—10 of Figure 6.

Figure 10 is a detail side view of the trigger and co-operating mechanism.

Figure 11 is a detail end view illustrating the gear mechanism transferring the motion of the cartridge belt feed to the trigger mechanism.

Figure 12 is a detail side view of the cartridge belt feed, partly in section on line 13—13 of Figure 1, and

Figure 13 is a top plan view of the cartridge tape or belt.

The gun carriage or frame 10 carries the axles 11 and 12 for the wheels 13 and 14, and a pair of grooved base rails 15 and 16 to permit the sliding of the gun along a railway or ways. The side walls 17 and 18 of the frame 10 carry at their ends a transverse block 19 provided with a central opening 20 and a lower bar 21. The side walls also carry bearings for the shaft 22 extending through the frame and carrying at its projecting outer ends, gears 23 and 24 which are in mesh with other gears 25 and 26 on shafts 27 and 28 journaled in suitable bearings 29 and 30 attached to the lateral faces of the frame 10. In the lower bar 21 is journaled a shaft 31, the outer end of which carries a crank wheel 32, adapted to be rotated by means of a handle 33 to rotate shaft 31.

The rear end of shaft 31 is journaled in frame 10, and the shaft carries near this end a gear wheel 34 in mesh with a gear wheel 35 above the same at the end of a shaft 36 journaled longitudinally in frame 10, and carrying in a recess 37 a drum or roller 38 being substantially cross-shaped in transverse section and having its outer faces concaved as indicated at 39; and within recess 37 a shaft 40 is journaled with its ends in recesses 41 and 42 of the frame 10 as shown in Figure 3.

Springs 43 and 44 are provided within recesses 41 and 42 to press upon the ends of shaft 40, and a drum 45 is rotatably mounted on shaft 40 within recess 37.

This drum 45 has its center part reduced as at 46 and its non-reduced end parts are grooved concavely as at 47.

In suitable bearing blocks 48 and 49 secured to the outer faces of the side walls of the frame 10, the shafts 27 and 28 are journaled, the outer ends of which are resting in the blocks 29 and 30, and carry the gear 25 and 26 as above described.

Between the blocks 48 and 49, the shafts 27 and 28 carry drums 50 having a cross-section, similar to the cross-sections of drums 38 and 45, and over which the cartridge belt or tape is fed in the customary manner.

The trigger or hammer and firing mechanism of the gun comprises the customary firing pin 51 adapted to pass through the end

blocks 52 and 53 of a frame arranged within the frame 10 and connected by strong spiral springs 54 resting with their ends against block 52 and block 53 respectively.

The firing pin 51 is provided with a collar 55 and a small spiral spring 56 is wound around said pin between said collar 55 and rigidly mounted block 52. The outer end of pin 51 projects beyond block 52 and terminates in a block 57 provided with teeth 58 in its lower edge with which the teeth 59 of the trigger 60 engage, which is secured to shaft 22 in approximately its middle part.

To the top of block 57, a block 61 is attached within a recess 62 of the frame 10 and a spring 63 cushions said block against the lower face of the frame.

The gun barrel 64 is surrounded by a core or mantle 65 and this mantle in turn is surrounded by a jacket 66 provided with inlet 67 for a cooling medium circulating around said mantle, and leaving the jacket at 68, and a sight 69 is provided on top of the barrel.

As illustrated in Figures 13 and 14 the tape or belt carrying the cartridge shells 70, provided with the customary cartridges 71, is composed of a plurality of sleeves 72. each provided with three laterally disposed perforated ears 73 spaced from each other to receive in these spaces 74 the laterally disposed ears 75 of the next adjoining sleeve while pins or pintles 76 are passed through the alined ears to connect the sleeves to form the belt. Each sleeve 72 is furthermore provided with a small block 77 secured intermediate its ends to the top part of the sleeve and having bevelled edges 78 adapted to snugly fit against the bevelled edge of the next adjoining block.

The width of these blocks is so selected that they pass readily through the depressed part of drum 45 over drum 38 and drums 50, while the rounded parts of the sleeves engage the grooves of these drums.

The shaft 31 carries at the rear of the front wall of frame 10 a cam piece 79 adapted to engage the outer cam face of a block 80 as shown in Figure 3 provided with a groove in its inner face in which are guided the outer ends of a frame consisting of the side bars 81 extending through the frame 10 near its underside.

The operation of the machine gun constructed according to the present invention will be clear from the above description.

The cartridge tape is fed laterally through the gun upon the operation of the crank handle 33 operating drum 38 to feed the cartridge tape over drums 50 and under drum 45. The rotation of the drums 50 will be transmitted to their shafts and the gears 25 and 26 at the ends of these shafts, which are in mesh with the gears 23 and 24 on the transverse shaft 22 on which also the trigger 60 is located which operates the block 57 and firing pin 51. The operation of the crank will rotate the block 79 and its cam face will cushion the operation. The recoil of the firing operation is taken up by the springs 54.

It will be clear that changes may be made in the general arrangement and specific construction of the minor details of my invention without deviating from the scope and spirit thereof.

What I claim as new, and desire to secure by Letters Patent of the United States is:—

1. A machine gun of the class described comprising a frame, a barrel, a cartridge feeding means on said frame, means for operating said feeding means, a trigger mechanism, means for transferring the operation of said feeding means to said trigger mechanism for exploding the cartridges, means for cooling said barrel, means for taking up the recoil of the exploding cartridges and for compensating the trigger oscillation, and means for protecting said feed operating means against shocks.

2. In a machine gun of the class described comprising a frame or carriage, a barrel in said frame, a plurality of drums having grooved faces rotatably mounted in said frame at the rear end of said barrel for guiding a cartridge tape, means for operating said drums to feed said tape, shafts for the drums mounted on said frame, two of said drums laterally disposed to a central drum, said lateral drums operating shafts, a trigger mechanism, a shaft for said trigger mechanism, means for connecting said lateral drum shafts with the shaft for said trigger mechanism to operate said trigger member by the operation of said drums, means for absorbing shocks on said drum operating means and means for taking up the recoil of the exploding cartridges and the oscillation of said trigger mechanism.

3. In a machine gun of the character described, a trigger mechanism comprising a transverse shaft, gears at the outer ends of said shaft, a trigger on said transverse shaft, having a toothed outer face, a block having a lower toothed edge in mesh with the teeth of said trigger, a firing pin secured to said block, springs for cushioning the recoil of the exploded cartridges and a spring for cushioning the oscillation of the trigger mechanism.

4. In a machine gun of the class described, a frame, a barrel in said frame, a shaft in said frame, a crank wheel on said shaft on the outside of said frame, a cam faced block on said shaft, a grooved block in front of said cam faced block also on said shaft, a pair of longitudinal bars having their ends guided in the groove of said block, springs cushioning the movements of said longitudinal bars for protecting said crank wheel

against shocks, substantially as described and for the purpose set forth.

5. A machine gun of the character described comprising a crank shaft, a drum on said shaft and in combination with the frame of the gun, grooved drums rotatably arranged within said frame, a belt including a plurality of hingedly connected cartridge sleeves, a plurality of blocks having bevelled edges secured on top of said sleeves, said tape adapted to be fed over said grooved drums and to rotate the same upon the operation of said shaft and drum thereon by said crank.

In testimony whereof I have affixed my signature.

ANTON MISKUNAS.