H. S. BREWINGTON.

REGISTER FOR TELEPHONE CALLS.

APPLICATION FILED DEC. 19, 1911.

1,068,972.

Patented July 29, 1913.

2 SHEETS—SHEET 1.

Fig. 1.

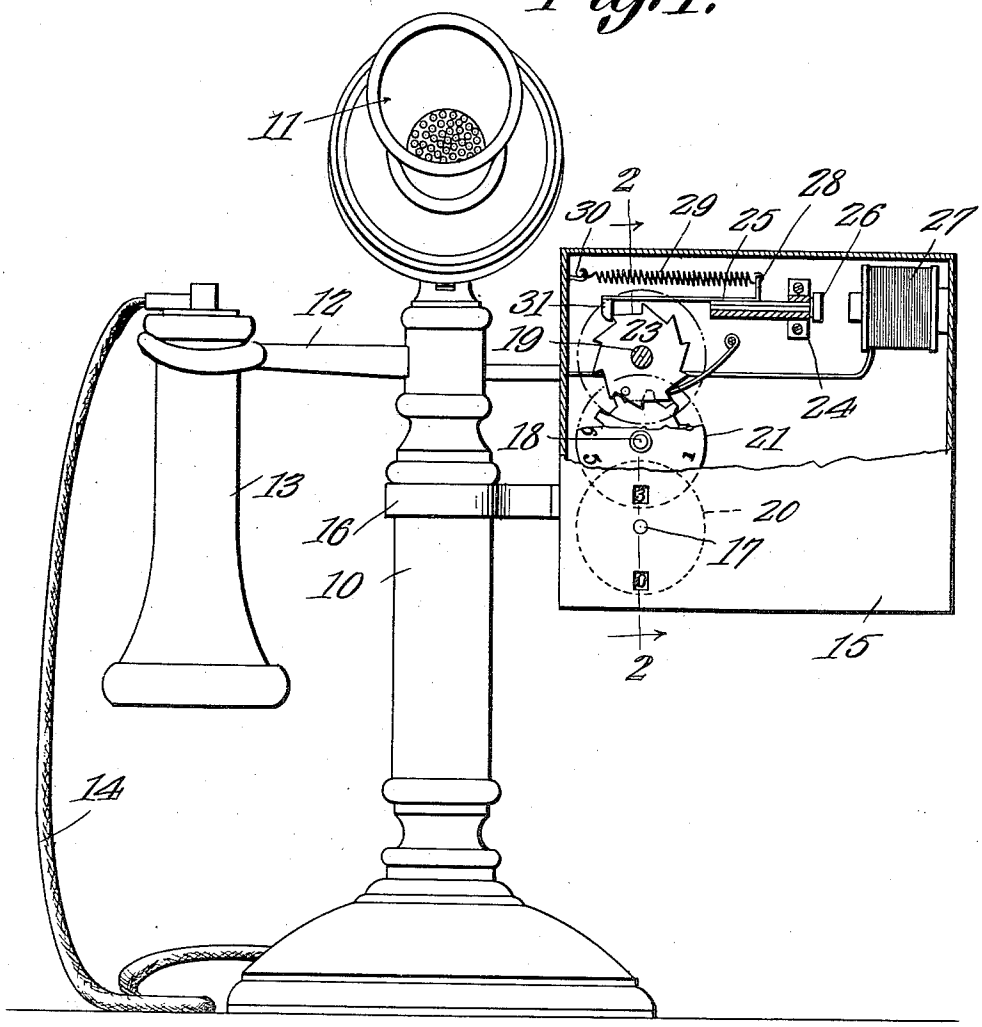

WITNESSES

F. B. Wooden.

Rowan M. Allen

INVENTOR

Henry S. Brewington

By E. Walton Brewington

Attorney

H. S. BREWINGTON.

REGISTER FOR TELEPHONE CALLS.

APPLICATION FILED DEC. 19, 1911.

1,068,972.

Patented July 29, 1913.

2 SHEETS—SHEET 2.

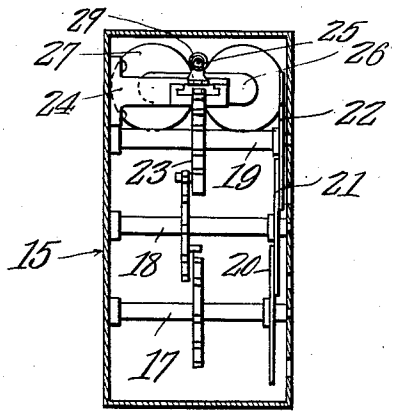

Fig. 2.

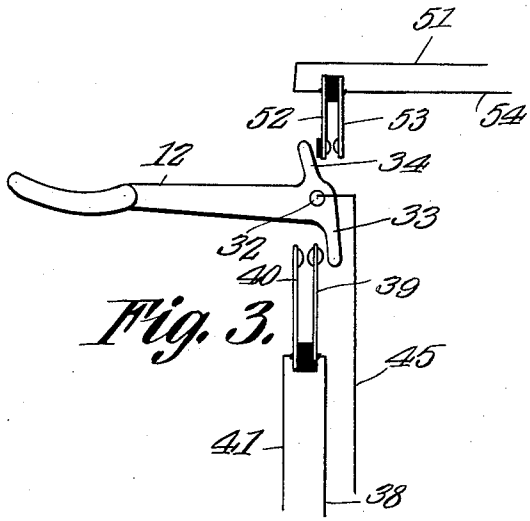

Fig. 3.

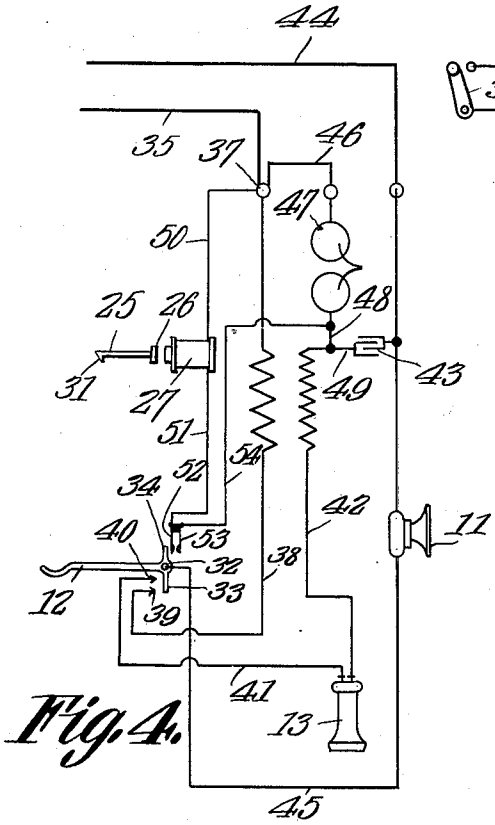

Fig. 4.

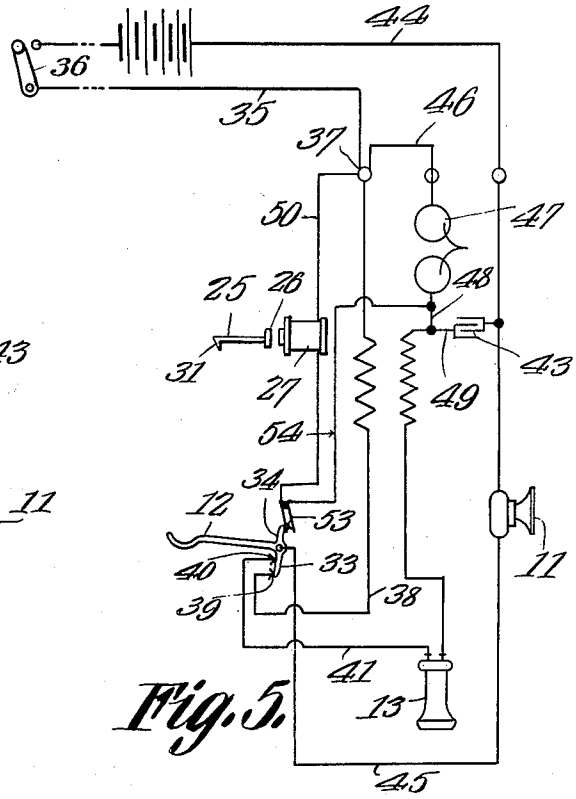

Fig. 5.

WITNESSES

F. B. Wooden.

Brown McClean

INVENTOR

By Henry S. Brewington

E. Walton Brewington

Attorney

UNITED STATES PATENT OFFICE.

HENRY S. BREWINGTON, OF BALTIMORE, MARYLAND.

REGISTER FOR TELEPHONE-CALLS.

1,068,972. Specification of Letters Patent. Patented July 29, 1913.

Application filed December 19, 1911. Serial No. 666,758.

To all whom it may concern:

Be it known that I, HENRY S. BREWINGTON, a citizen of the United States, residing at Baltimore city, State of Maryland, have invented certain new and useful Improvements in Registers for Telephone-Calls, of which the following is a specification.

This invention relates to means for registering the number of calls made by the users of telephones.

Many disputes have arisen over the bills rendered subscribers by telephone companies for calls made on their telephones and as yet there has appeared in public no device which will satisfactorily register the number of such calls. A register at the exchange, actuated by the operator, would be unsatisfactory to the subscriber, and a register at each telephone, operated by the subscriber would be equally unsatisfactory to the company.

The primary object of this invention is to overcome the existing troubles, and to destroy all chances for disagreement over the matter.

A further object of this invention is to provide a register for the purpose described, to be actuated by the operator but at the same time be under the control of the subscriber.

A further object of the invention is to provide a register of this character with means, under the control of the subscriber, whereby the operator will be permitted to actuate the mechanism.

A further object of the invention is to provide a register, at the telephone, operable only by the operator at the exchange, and operable by the operator at the exchange only when the subscriber at the telephone has necessarily adjusted the mechanism to permit of such operation.

With these and other objects in view, the invention consists in the improved construction, arrangement and combination of parts hereinafter fully described and afterward specifically claimed.

In order that the construction and operation of the invention may be readily comprehended, I will now specifically describe the same, in connection with the accompanying drawings, which illustrate a preferred embodiment of the invention, and in which—

Figure 1 represents a front elevation of a telephone equipped with my improved register, the casing of the latter being partially broken away to expose the interior mechanism. Fig. 2 represents a vertical sectional view taken on the plane indicated by the broken line 2—2 of Fig. 1, Fig. 3 represents, diagrammatically, the immediate connections with the telephone hook, the latter being shown in side elevation and in a neutral position, Fig. 4 represents diagrammatically the arrangement of the parts with reference to the circuits, the hook being in neutral position, Fig 5 represents a view similar to Fig. 4, with the hook raised and in operative position.

Like reference characters indicate the same parts in all of the figures of the drawings.

Referring specifically to the drawings, 10 indicates the standard, 11 the transmitter and mouth piece, 12 the hook, 13 the receiver, and 14 the cable containing the wires leading to the receiver, all of which parts may be of any suitable well known construction.

At 15 is shown a casing, of any suitable size, shape and material, in which I house the operative mechanism of my invention, such case being supported, at the subscriber's telephone, in any suitable manner, being here shown as supported on a bracket 16 from the standard 10 of the telephone to which it may be secured, preferably removably, in any suitable manner.

Within the casing 15 are journaled a plurality of shafts of any desired number, herein shown as three in number, marked 17, 18 and 19, geared together so that one revolution of 17 will rotate 18 one step and one revolution of 18 will rotate 19 one step, suitable dials 20, 21 and 22 being secured to shafts 17, 18 and 19 respectively and a ratchet wheel 23 to shaft 19. This train of mechanism may be varied at will, the sole object being to properly record the steps of the movement of the shaft 19 as hereinafter explained.

Secured in any suitable manner to the

casing 15, as for instance by screws, is a bracket 24 in which is slidably mounted a rod 25 secured to or forming part of the armature 26 of an electromagnet 27, from which rod 25 projects a pin 28 connected by a spring 29 with a hook 30 secured to a wall of the casing. When the electro-magnet 27 is energized, as hereinafter explained, the armature 26 will be attracted to it, drawing the rod 25 with it, against the stress of the spring 29, when, by reason of the engagement of a hook 31 on the end of the rod with the teeth of the ratchet wheel 23, said wheel will be rotated one step, which step will duly register on the dials, in a manner well known, the specific construction of the registering wheels and dials forming no part of the present invention.

One step will be made and one registered for each call made on the telephone by means of the devices and arrangements now to be described.

Referring particularly to Figs. 3 to 5 of the drawings it will be observed that the hook 12 is pivoted on its pin 32 in the usual manner and besides the usual contact arm 33 which projects downward inside of the box, there is provided an upwardly projecting contact arm 34.

In Figs. 4 and 5 I have illustrated diagrammatically the usual circuits, supplemented by the circuits necessary for the operation of the present invention, said usual circuits comprising a wire 35 from the exchange, where there is any usual circuit closer, switch, or button 36, said wire extending to a post 37, thence to, as at 38, a terminal or contact 39 adjacent to the usual contact arm 33 of the hook which latter connects said contact point or terminal with another contact terminal 40 when the receiver is off the hook, as in Fig. 5, from which point 40 the wire extends as at 41 to the receiver 13 and thence, as at 42 to and through the condenser 43 and finally, as at 44 returns to the exchange. A second usual circuit is formed when the receiver circuit is closed, as in Fig. 5, and comprises wire 35 and 36, contact terminal 39, contact arm 33, hook 12, pin 32, wire 45, transmitter 11 and wire 44 back to the exchange, being the transmitter circuit. A third usual circuit comprises wires 35 and 46 to the bells 47 and thence by wires 48 and 49, condenser 43 and wire 44 back to the exchange. A fourth circuit includes wire 35, post 37, wire 50, electromagnet 27, wire 51, contact 52, which when the receiver is off the hook, as in Fig. 5, touches contact 53 from which the circuit extends through wires 54, 48 and 49, and through the condenser 43 and wire 44 back to the exchange. When a call is made by a subscriber, the parts being as indicated in Fig. 4, the receiver is removed from the hook and the parts moved to the position in Fig. 5, the receiver and transmitter circuits being closed. The exchange operator answers the call and when connection has been made, presses the button which closes the bell circuit, which carries a different class of current from the receiver and transmitter circuits and thus energizes the magnets of the bells and the magnets of the registering mechanism, ringing the bell and operating the registering mechanism to register the call, on the dial in sight of the subscriber, thus giving him notice by both bell and dials that a call has been registered.

It will be obvious that only the bell circuit can be closed while the receiver is on the hook so that while only the operator at the exchange can put the registering mechanism in operation, such action cannot be made unless permitted by the subscriber by removing the receiver from the hook, and further no registering can be performed, even when permitted by the subscriber without making an ocular and an aural demonstration thereof.

Having thus fully described my invention, what I claim as new and desire to secure by Letters Patent of the United States—

1. In a telephone system, a ringing circuit including a bell and a condenser, a registering circuit including a registering mechanism in parallel with said bell and in series with said condenser, and means at the exchange end of said circuits for controlling said ringing circuit while the subscriber's talking circuit is open and controlling both said ringing and register circuits when said subscriber's talking circuit is closed, whereby said bell will ring continuously while said registering mechanism is being actuated.

2. In a telephone system, a ringing circuit including a bell and a condenser, a registering circuit including a registering dial, an armature for operating said dial and an electromagnet for controlling said armature, said registering circuit being in parallel with said bell and in series with said condenser, and means at the exchange end of said circuits for controlling said ringing circuit while the subscriber's talking circuit is open and controlling both said ringing and register circuits when said subscriber's talking circuit is closed, whereby said bell will ring continuously while said registering mechanism is being actuated.

3. In a telephone system, a ringing circuit including a bell and a condenser, a registering circuit including a registering mechanism in parallel with said bell and in series with said condenser, and means at the exchange end of said circuits for controlling said ringing circuit while the subscriber's

talking circuit is open and controlling both said ringing and registering circuits when said subscriber's talking circuit is closed, whereby said bell will ring continuously while said registering mechanism is being actuated, and a receiver hook for closing said subscriber's end of said circuits.

In testimony whereof I affix my signature in presence of two witnesses.

HENRY S. BREWINGTON.

Witnesses:
SAMUEL W. KIRK,
BROWN M. ALLEN.