J. A. & D. S. GARDNER.

CENTRIFUGAL CASTING MACHINE.

APPLICATION FILED OCT. 22, 1915.

1,195,803. Patented Aug. 22, 1916.

Fig. 1.

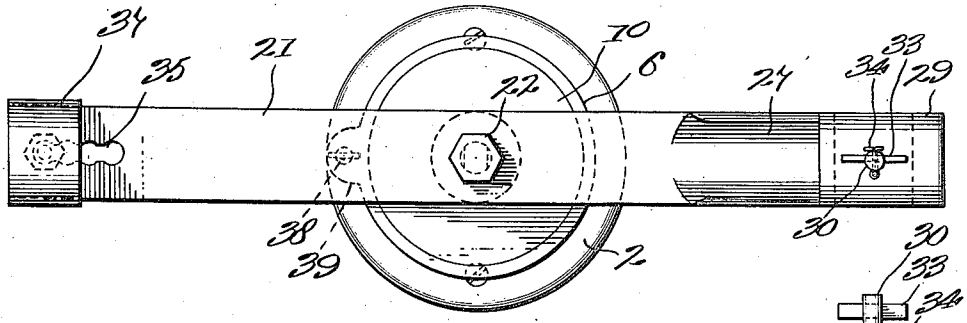

Fig. 2.

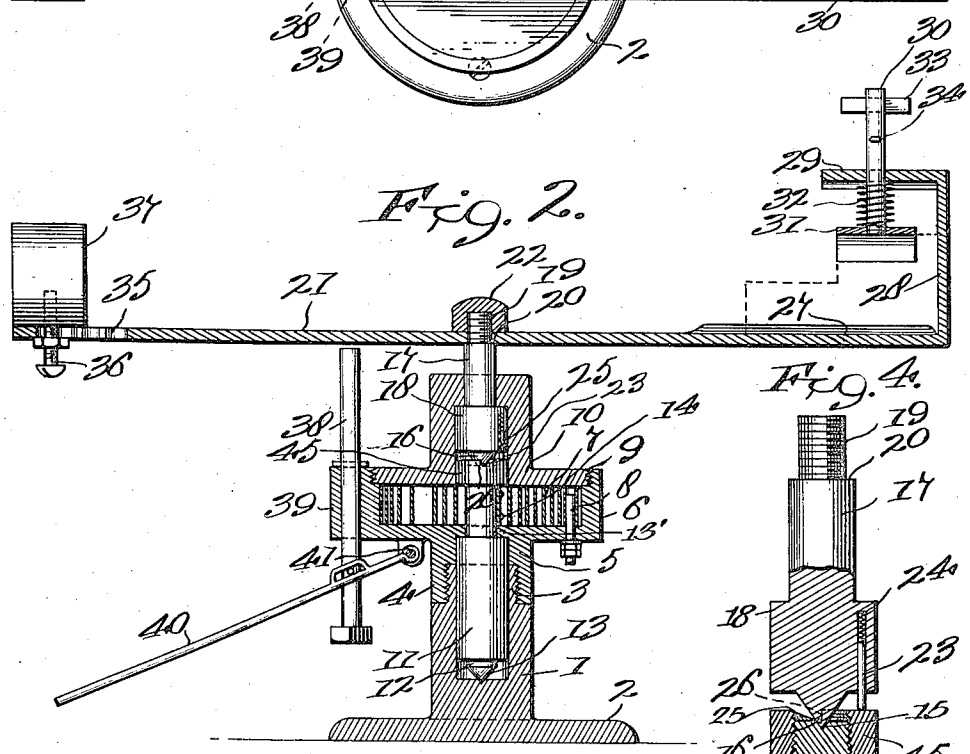

Fig. 4.

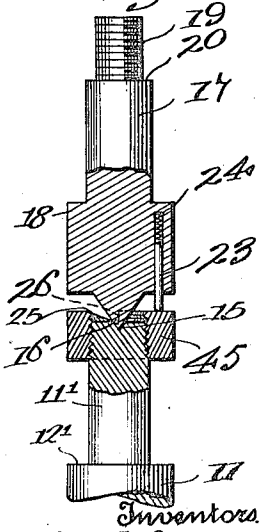

Fig. 3.

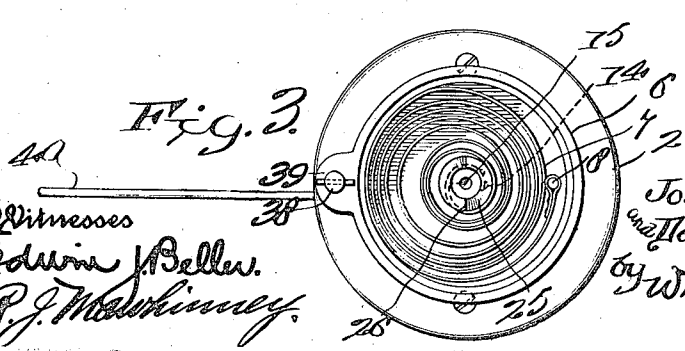

Witnesses

Edwin J. Beller.

R. J. Mawhinney.

Inventors.

Joseph A. Gardner,

and David S. Gardner.

by Williamson, Quinta & Mackey.

Attorneys.

UNITED STATES PATENT OFFICE.

JOSEPH A. GARDNER AND DAVID S. GARDNER, OF MEMPHIS, TENNESSEE.

CENTRIFUGAL CASTING-MACHINE.

1,195,803. Specification of Letters Patent. Patented Aug. 22, 1916.

Application filed October 22, 1915. Serial No. 57,343.

To all whom it may concern:

Be it known that we, JOSEPH A. GARDNER and DAVID S. GARDNER, citizens of the United States, both residing at Memphis, in the county of Shelby and State of Tennessee, have invented certain new and useful Improvements in Centrifugal Casting-Machines; and we do hereby declare the following to be a full, clear, and exact description of the invention, such as will enable others skilled in the art to which it appertains to make and use the same.

The present invention relates to improvements in centrifugal casting machines, and consists more particularly in an improved centrifugal machine for casting dental, jewelers' or other castings; and the machine is adapted for use in connection with a device such as set forth in our co-pending application entitled "Improvements in casting appliances", Serial No. 57,342, filed October 22, 1915.

It is an object of the present invention to produce a machine of this character which will effect uniformly accurate casts in both the noble and base metals, and one that is simple in construction and can be easily operated by the novice.

With these and other objects in view the invention consists in the novel details of construction and combinations of parts more fully hereinafter disclosed and particularly pointed out in the claims.

In the accompanying drawings forming a part of this application, and in which similar reference symbols indicate corresponding parts in the several views: Figure 1 is a top plan view of an improved casting machine constructed in accordance with the present invention. Fig. 2 is a vertical sectional view through the machine. Fig. 3 is a top plan view of the casing with the upper section and arm removed; and Fig. 4 is a detail, partly in elevation and partly in section, of the stub shaft and releasing device.

Referring more particularly to the drawings, the improved machine includes a casing built up of a plurality of hollow sections, the lowermost, 1, of which is provided at its lower end with a circular or other base 2, and with a reduced and threaded upper end 3 for receiving the lower threaded end 4 of the next adjacent section 5. This section 5 is enlarged at its upper end to provide a box or housing 6 for receiving a coil spring 7 connected at one end therein to a rigid pin or other anchoring means 8. The upper end of the box or housing 6 is threaded, as indicated at 9, to receive the threaded end of the upper section 10 of the casing, which, as will appear more particularly from Fig. 2, is reduced above the housing 6 to be substantially uniform with the lower portion of the intermediate section 5 and the lowermost section 1. The three sections 1, 5 and 10, thus assembled, provide a vertical bearing chamber in which is journaled the main driving shaft 11, the same being reduced at its lower end 12 and provided with a substantially conical trunnion 13 mounted in a corresponding counterbore in the base of the bearing chamber at the bottom of lowermost section 1. The drive shaft 11 is also formed with a reduced upper end 11′ forming a shoulder 12′, which fits against an internal annular flange 13′ extending inwardly from the intermediate section 5 and forming part of the base of the box or housing 6. The spring 7 is connected to rotate the drive shaft 11, as indicated at 14 in Fig. 3, and the upper end of said drive shaft is provided with a counterbore 15 for receiving and supporting the conical reduced end 16 of a stub shaft 17 which is formed with an enlarged lower end 18, immediately above the cone 16 and of a diameter preferably uniform with that of a nut-collar 45 threaded on the upper end of the drive shaft 11; such enlarged portion 18 being journaled in the reduced upper end of the uppermost section 10 of the casing, as clearly disclosed in Fig. 2. It will be apparent from this figure that the stub shaft 17 extends upwardly through a perforation in the top of the section 10 and is reduced and threaded, as indicated at 19, to provide a shoulder 20 on which rests an arm or beam 21 secured in place by a nut or other means 22.

As more particularly illustrated in Fig. 4, the enlarged portion 18 of the stub shaft 17 is vertically recessed to slidably receive a pin or pawl 23, the same being normally projected by a coil spring or other means 24,

located in the recess beneath said pin. Such pin or pawl 23 is adapted to rest upon the upper face of the nut 45 on the drive shaft 11 adjacent the counterbore 15 in the upper end of the same, and said nut is constructed with one or more ratchet faces including each a downwardly inclined wall 25 terminating in a substantially perpendicular abutment 26; which latter is adapted to engage the pin 23 as the spring 7 unwinds and carry the stub shaft 17 therewith. It will be apparent, however, that after the force of the spring motor 7 has been spent and the drive shaft 11 brought to a stop, the stub shaft 17 may continue to rotate in obedience to its momentum, such action being permitted by the pin or pawl 23 riding up the inclined walls 25 of the cam faces.

At one end the arm 21 is shaped concave, as indicated at 27, and beyond said concave portion the outer end is turned up at right angles thereto to form a standard or post 28, supporting the upper terminal end 29 of the arm, which is bent in turn at right angles to the standard 28 and perforated to receive a sliding rod 30 on the lower end of which is an arcuate clamp 31 for engaging a combined ladle and mold, or flask containing a ladle and mold to secure the same in position, as indicated in dotted lines in Fig. 2. The clamp 31 is yieldably maintained in engagement with the mold or flask by a coil spring, or other means, 32 encircling the rod 30 and operating between the terminal 29 and clamp 31. Operation of the sliding rod 30, to withdraw the clamp from engagement with the mold or flask, is facilitated by a cross bar 33 secured to the upper end of said rod, and which is adapted for engagement by the operator's fingers; the downward movement of the rod 30 being limited by a stop such as a cotter pin or other device 34. The opposite end of the arm 21 is slotted, as shown at 35, to receive a bolt or screw 36 for adjustably connecting thereto a counterweight 37, balancing the device in a well understood manner.

The spring 7 is re-wound by reverse rotation of the arm 21, and after the same has been restored to potential condition the arm 21 may be secured against movement by a latch rod 38 mounted to slide in an offset 39 of the housing 6, and being connected to be raised and lowered from a lever 40 pivoted in ears projecting beneath said housing, as indicated at 41.

In operation, the machine is preferably employed in conjunction with the improved combined appliance as set forth in my co-pending application above, and the same is placed in the concave end 27, as illustrated by dotted lines in Fig. 2, the sliding rod 30 having been raised to introduce the same beneath the clamp 31, which is thereupon released and permitted to descend under the influence of the coil spring 32 to hold the same rigidly in position and against accidental displacement during the revolution of the arm 21.

The precious or other metal to be cast is poured into the ladle and melted therein in a well understood manner, after which, through the lever 40, the latch rod 38 may be lowered to disengage the arm 21, as in Fig. 2, and the coil spring 7 will then come into play and spin the arm 21 through the stub shaft 17 and drive shaft 11. During this operation the shoulder 16 of one of the cam faces will engage the pin 23 and transmit the driving motion from the shaft 11 to the stub shaft 17. When, however, the force of the spring 7 has been spent and the same completely unwound, bringing the drive shaft 11 to a stop, the arm 21 and stub shaft 17 will be permitted to continue to rotate under the influence of momentum by reason of the pin 23 riding over the inclined faces 25 of the upper end of the nut-collar 45, and such action will insure universally even thrusts, allowing the centrifugal action to go on until the molten metal has cooled and solidified in the investment material in the mold.

After the casting operation, the spring 7 may be re-wound for subsequent use by revolving the arm 21 in a reverse direction, in which case the pin or pawl 23 will engage one shoulder 26 on the nut collar 45 and rotate the same and the drive shaft 11 in a direction to recoil said spring. After the recoil has been completed the lever 40 is raised, elevating the latch rod 38 into the path of the arm 21 whereby the latter is prevented from spinning until future use demands.

It will be understood that although we have shown and described the holder for the casting appliance, or combined mold and ladle, as being constructed in one piece with the arm or beam 21, nevertheless this holder may obviously be constructed of a separate piece and secured to the end of the arm 21 by rivets, bolts, or other suitable means.

It is obvious that those skilled in the art may vary the details of construction and arrangements of parts without departing from the spirit of our invention, and therefore we do not wish to be limited to such features except as may be required by the claims.

We claim:—

1. In a centrifugal casting machine, the combination of an inclosed casing, a rotatable drive shaft journaled and wholly contained within said casing, means connected to rotate said drive shaft, a stub shaft journaled within said casing and having one end projecting therebeyond, a releasable

connection between said drive and stub shafts and located wholly within said casing, and an arm mounted on the outer end of said stub shaft, substantially as described.

2. In a centrifugal casting machine, the combination of an inclosed casing, a drive shaft journaled and wholly contained within said casing, a motor located wholly within said casing and connected to rotate said drive shaft, a bearing in one end of said drive shaft, a stub shaft journaled in said bearing within the casing and having one end projecting therebeyond, a releasable connection between said drive and stub shafts, and a rotary spinning element on the outer end of said stub shaft, substantially as described.

3. In an improved centrifugal casting machine, the combination of an inclosed casing, a drive shaft journaled substantially vertically and contained wholly within said casing, means in said casing connected to rotate said drive shaft, a bearing in the upper end of said drive shaft, a stub shaft journaled in said bearing within the casing and having one end projecting therebeyond, and a releasable connection between said drive and stub shafts contained wholly within said inclosed casing and including a ratchet element on one of said shafts, and a yieldable pawl on the other shaft engaging said ratchet element, substantially as described.

4. In a centrifugal casting machine, the combination of an inclosed casing built up of a plurality of interconnected sections providing therebetween a bearing chamber, a drive shaft journaled in said bearing chamber, means connected to drive said shaft, a stub shaft journaled within said chamber above the drive shaft and having one end thereof projecting beyond the casing, a releasable connection between said drive and stub shafts for locking the same to rotate together in one direction and permitting the continued rotation of the stub shaft when the drive shaft stops, and a rotatable element secured to said stub shaft, substantially as described.

5. In a centrifugal casting machine, the combination of an inclosed casing comprising end and intermediate sections removably joined together and providing a vertically-disposed bearing chamber therebetween, the intermediate section being enlarged to provide a housing, a motor located in said housing, a drive shaft journaled in said chamber and connected to be rotated from said motor, a stub shaft journaled in said chamber above the drive shaft and having one end projecting upwardly beyond the uppermost casing section, a releasable connection contained wholly within said casing and arranged between said stub and drive shafts for locking the same to rotate together, and a rotatable element connected to spin with the outer end of said stub shaft, substantially as described.

6. In a centrifugal casting machine, the combination of an inclosed casing including end and intermediate sections threaded together for detachment, and providing a bearing chamber therebetween, the intermediate section being enlarged to provide a housing, a motor in said casing, a drive shaft journaled in said chamber and connected for rotation from said motor, a stub shaft journaled above said drive shaft and having one end projecting beyond the casing, a releasable connection contained within the upper housing section and interposed between said drive and stub shafts, a rotatable element mounted on the outer end of said stub shaft, and means supported from the intermediate casing section for locking said rotatable element against movement, substantially as described.

7. In a centrifugal casting machine, the combination of a casing providing a bearing chamber, a drive shaft, a pivot-bearing for journaling said drive shaft, means connected to rotate said drive shaft, a stub shaft, a pivot-bearing for journaling said stub shaft in the casing, a rotatable element connected to move with said stub shaft, and means for connecting said stub shaft to be actuated from said drive shaft, substantially as described.

8. In a centrifugal casting machine, the combination of an inclosed casing, a drive shaft contained wholly within said casing, a pivot-bearing journaling said drive shaft in the casing, a motor connected to rotate said drive shaft, a stub shaft, a pivot-bearing on said stub-shaft for journaling the same in said casing, a rotatable element connected to move with said stub shaft, and a one-way connection arranged between said drive and stub shafts and located within the inclosed casing, substantially as described.

9. In a casting machine of the character described, the combination of an inclosed casing providing a bearing chamber and a housing therein, a drive shaft, a pivot-bearing for journaling the drive shaft in said bearing chamber, a spring motor mounted in said housing and connected to rotate said drive shaft, a stub shaft, a pivot-bearing for journaling the stub shaft within said casing, a rotatable element connected to be operated from said stub shaft, and means connecting said drive and stub shafts, substantially as described.

10. In a centrifugal casting machine, the combination of an inclosed casing built up of a plurality of sections forming therebetween a bearing chamber, a drive shaft having a pivot-bearing for journaling the same

to rotate in said chamber, a coil spring mounted in said casing and connected to rotate said drive shaft, a stub shaft fitted in the bearing chamber above said drive shaft and having a pivot-bearing supporting the same in the upper end of the latter, a rotatable element connected to spin with said stub shaft, and a one-way releasable connection between said drive and stub shafts, substantially as described.

In testimony whereof, we affix our signatures.

JOSEPH A. GARDNER.
DAVID S. GARDNER.