(No Model.) 2 Sheets—Sheet 1.

W. J. F. LIDDELL.

BALING PRESS.

No. 381,263. Patented Apr. 17, 1888.

FIG. 1.

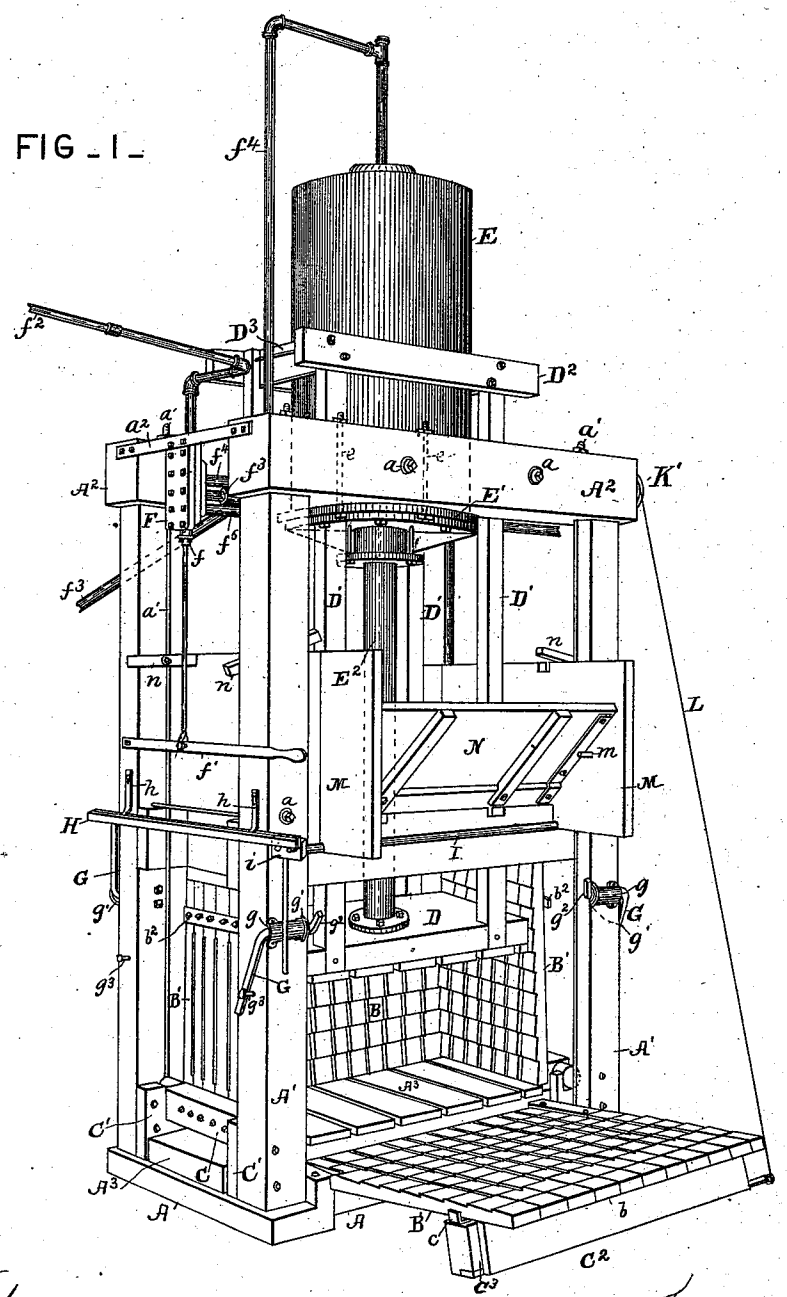

Attest:
Geo. T. Smallwood,
Rob. Smith.

Inventor:
Walter J. F. Liddell
By A. L. Smith
Atty.

N. PETERS, Photo-Lithographer, Washington, D. C.

(No Model.) 2 Sheets—Sheet 2.

W. J. F. LIDDELL.

BALING PRESS.

No. 381,263. Patented Apr. 17, 1888.

FIG. 2.

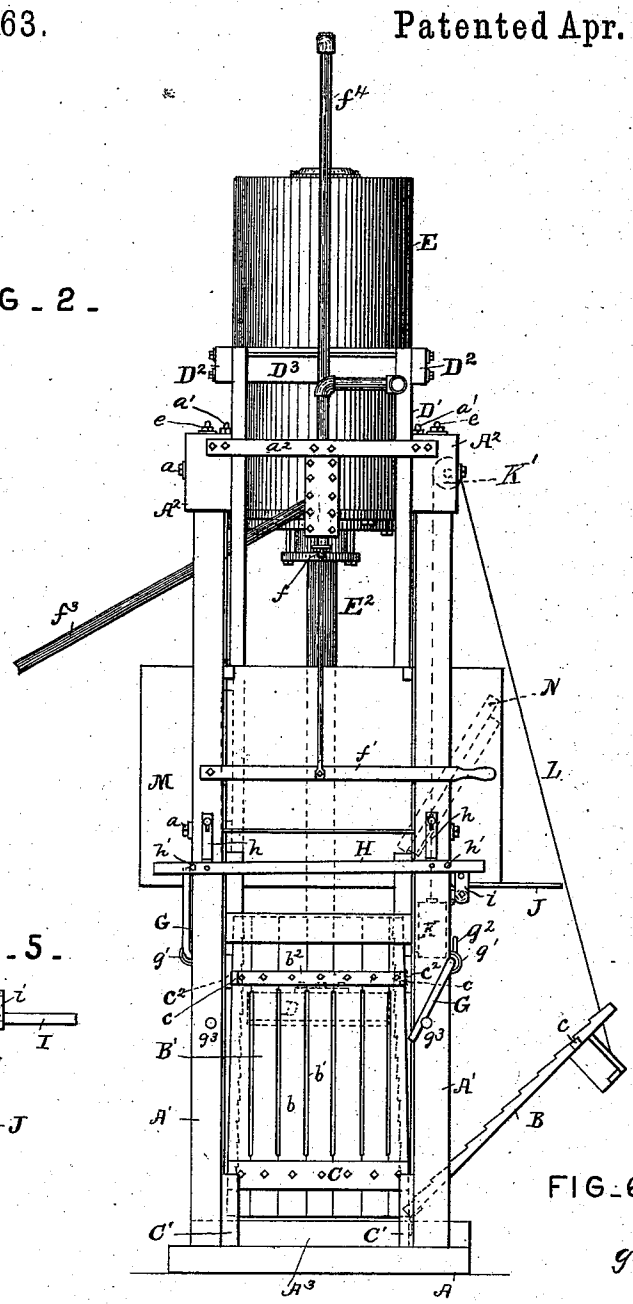

FIG. 5.

FIG. 6.

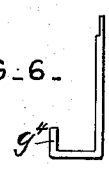

FIG. 3.

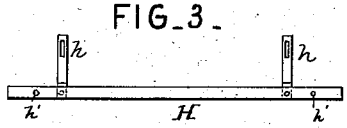

FIG. 4.

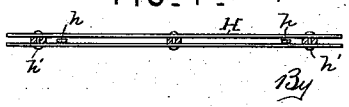

Attest:
Geo. T. Smallwood,
Ref. Smith.

Inventor:
Walter J. F. Liddell.
by A. L. Smith.
Atty.

N. PETERS, Photo-Lithographer, Washington, D. C.

UNITED STATES PATENT OFFICE.

WALTER J. F. LIDDELL, OF CHARLOTTE, NORTH CAROLINA, ASSIGNOR OF ONE-HALF TO WALTER S. LIDDELL, OF SAME PLACE.

BALING-PRESS.

SPECIFICATION forming part of Letters Patent No. 381,263, dated April 17, 1888.

Application filed December 13, 1887. Serial No. 257,799. (No model.)

To all whom it may concern:

Be it known that I, WALTER J. F. LIDDELL, of Charlotte, county of Mecklenburg, and State of North Carolina, have invented a new and useful Improvement in Baling-Presses, of which the following is a full, clear, and exact description, reference being had to the accompanying drawings, making part of this specification.

My invention relates to an improvement in a combined tramper and press for packing and baling cotton, hay, &c.; and it consists in the combination, with a suitable main frame, hereinafter described, of an inner sliding frame carrying the press-platen or tramper, a steam-cylinder located above the frame, and a piston-rod interposed between the piston of said cylinder and the platen, for actuating the latter; in a bell-shaped press-chamber composed of walls or doors serrated or ratcheted on their inner faces and diverging downward, whereby the area of the bottom or base of said press-chamber is greater than the entrance or top thereof; also, in the combination with the doors of the press-chamber, of weight and pulley attachments for counterbalancing the weight thereof when open; in adjustable clamps for holding the press-chamber doors closed during the process of tramping and baling, adjustable bars for engaging said clamps, and means for operating said bars for releasing the clamps; in the combination, with the main frame, of the extended end boards and pivoted doors, adapted to be swung downward on either side of the machine for allowing the cotton or other material to be fed to the press, and in certain details of construction and arrangement hereinafter set forth and claimed.

In the accompanying drawings, Figure 1 is a perspective view of my improved combined tramping and baling press. Fig. 2 is a side elevation of the same. Figs. 3 and 4 are detached detail views of the adjustable clamp-holding bar; and Fig. 5, a view of one end of the crank-shaft and slotted crank for operating one of the adjustable clamp-holding bars, and of the detachable lever for operating said crank-shaft. Fig. 6 shows a modification in the form of the clamps.

Referring to the drawings, A A represent the base of my improved combined tramper and baling-press.

A′ A′ indicate the four upright corner timbers of the frame, and A^2 the upper cross-bars connecting the corner posts or timbers. The corner-posts are further connected and braced by means of bolts or rods *a a*, and bars a^2, and the cross-timbers A^2 are held in place and secured by means of rods *a′ a′*, which are let into the inner faces of the corner-posts A′, recessed to receive them.

A^3 represents the slatted press-bed, upon which the cotton, hay, or other material is deposited preparatory to tramping the same.

B B B′ B′ designate the walls and at the same time the doors of the press-chamber. These walls or doors are, by preference, composed of slats *b*, cut out or recessed on their adjacent edges or faces, as shown at *b′*, for the purpose of allowing the escape of air between the same during the process of tramping and baling. At their upper and lower edges these slats lie with their contiguous or adjacent faces in contact or in close proximity with each other, and are united by one or more iron bars or cleats, b^2. The slats *b* are further provided on their inner faces with teeth, serrations, or ratchet-faces, as shown in Figs. 1 and 2, for a purpose hereinafter set forth.

The doors B and B′ are pivoted at their lower ends within the main frame by means of the bars or cleats C, which have journals formed on their ends working in boxes C′, attached to the main frame, or in any suitable manner. The doors B and B′ are each constructed in such manner that they are wider at their bottom edge than at the top, and thus are made to incline inward or approach each other at the upper end of the press-chamber or to diverge downwardly, as represented in the drawings, for a purpose which will appear.

D represents the platen, which is slatted on its operative or lower face similarly to the bed A^3.

D′ D′ are four uprights or frame-bars attached at their lower ends to the platen D and connected at their upper ends by the cross-timbers D^2 and D^3, all together forming a frame

which slides inside of or within the main frame, above described, and guides the platen D.

E designates a steam-cylinder, which is located above or upon the main frame, to which it is secured by means of a large flange, E′, on the steam-cylinder extending (preferably) beneath the upper cross-bars, A^2, of the main frame and secured thereto by bolts *e e*, passing through said flange E′ and cross-bars. If preferred, said flange may rest upon the cross-bars A^2 instead of beneath the same, but the arrangement shown is preferred as best adapted to take the strain upon the cylinder and frame.

E^2 designates the piston-rod or plunger, which is preferably of large diameter, and is connected at its lower extremity to the press-platen D, above described. Said plunger or piston-rod enters the steam-cylinder through a perforation in the lower head thereof, and is provided on its upper end with a piston working within the cylinder in the usual manner.

F represents a steam-chest of any usual construction, and *f* and *f′*, respectively, the valve-stem and lever for operating the valve thereof.

f^2 and f^3 indicate, respectively, the supply and exhaust pipes thereof, and f^4 and f^5 are pipes or conduits leading from the steam chest to opposite ends of the steam-cylinder E. By operating lever *f′* in one direction steam passes from the steam-chest F into pipe f^4 and thence to the upper end of the cylinder, thereby depressing the piston and moving the plunger and platen of the press downward. At the same time the steam which had forced the piston up is permitted to escape from beneath said piston through the pipe f^5 into the steam-chest and passes out through the exhaust f^3. When the lever *f′* is moved in the opposite direction, the operation is reversed, the steam passing into the cylinder at the lower end through the pipe f^5 and out of the top of the cylinder through pipe f^4. By this arrangement it will be seen that the movement of the piston and plunger may be easily reversed for moving the press-platen up or down, as may be required.

The inner sliding frame, D′ D^2 D^3, above described, is so proportioned and constructed that the cross-bars D^2 thereof slide in contact with the surface of the cylinder E, and by this arrangement said frame is steadied and guided in its movements.

G G are clamps or latches located on the corner-posts A′, as shown, journaled in bearings *g*, attached to said corner-posts. To provide for the great strain that is put upon these bearings *g*, staple-bolts *g′* are employed, surrounding the same and passing through the corner-posts A′, on the other side of which they are provided with nuts for holding them securely in place. When the press-chamber doors are closed, the longer arms of these clamps G are rocked upward, bringing the short arms g^2 thereof to bear against the outer faces of battens C^2, secured to the doors B upon their outside and faced with iron plates. When the clamps are thus adjusted, the long arms thereof are engaged at their extremities by a horizontal bar, H, suspended from the main frame by slotted pivoted links *h h*, which allow said bar to swing and be lifted, for a purpose to be described. Said bar is provided with pins *h′ h′*, one at or near each end thereof, against which the long arms of the door-clamps rest, as shown in Figs. 2, 3, and 4. The bar H is preferably made double or composed of two parallel plates or bars (shown best in Fig. 4) secured together by bolts or rivets *a*, space being left between said plates for the reception of the ends of the door-clamps G.

I represents a shaft extending across the front side of the main frame of the press, and provided at each end with a crank-arm, *i*, and wrist-pin *i′*, resting into contact, or nearly so, with the lower face of the clamp-holding bar H. The crank *i* is slotted, as shown at i^2, Fig. 5, for the reception of a lever, J. This lever has an enlarged head, *j*, for preventing it from passing entirely through said slat when inserted therein.

When by means of the lever J the crank-shaft I is rocked, the wrist-pin *i′* acts upon and lifts the forward ends of the bars H, thereby releasing the clamps G on the front side of the press. The moment these are released the other clamps on the rear side of the press exert their force on the bars H, which immediately swing upon their pivotal supporting-links and allow said clamps to clear themselves and fall. Stops g^3 limit the downward movement of the clamps G. In this manner the doors B B are simultaneously released, and are thrown open by the force exerted upon them by the material which has been compressed in the press-chamber. The battens C^2 are notched, as indicated at c^3, to allow the same to pass by the short arms of the clamps G.

The doors B′ B′ are held in their closed position by means of fingers or L-shaped plates *c* on the doors B B, which engage the extended ends of the plates or cleats b^2 on said doors B′ B′. It will thus be seen that all the doors of the press-chamber will be simultaneously released and thrown open when the crank-shaft I is operated by lever J.

To prevent injury to the doors of the press-chamber when thus thrown open, I employ in connection with each a weight, K, and rope L, running over pulley K′ on the main frame and attached to the door, as shown, which prevents the door from falling violently on the ground or floor.

M M designate the end boards of the receiving-chamber, extended beyond the corner-posts A′ of the main frame, and provided with stops *m* for limiting the outward and downward movement of two doors, N, pivoted between said end boards, as shown. The doors N when closed are held by means of pivoted blocks or short levers *n n*, as shown in Fig. 1.

The operation of the press, concisely stated, is as follows: The lower press-chamber doors

are first closed and locked in such position by means of the clamps described. These clamps are adjusted relatively to the clamp-holding bars, so that the upper ends of their long arms are engaged thereby, whereby the clamps are all locked and held by said bars during the process of tramping and baling. The press-doors being closed and locked the valve-operating lever is moved in the proper direction for admitting steam to the lower end of the cylinder, and the platen is thus raised to its highest limit. Here it is allowed to remain, and one (or both) of the doors of the receiving-chamber is opened for allowing the material to be fed to the press beneath the platen. When a sufficient quantity of material has been fed to the press, the receiving-doors are closed and locked by means of the blocks or short levers above described, the valve-lever is moved, and the platen descends, compressing the material in the press-chamber. By means of the diverging ratchet-faced walls of the press-chamber the cotton or other material when compressed tightly therein will be caught and held by the projecting ratchet faces or teeth of said walls, and thus prevented from rising or expanding again when the platen moves upward. The platen is now raised again and a new supply of material is introduced, when the platen again descends, as before. This operation of tramping is repeated and continued until the desired weight of material has been fed to the press, when the platen descends for the last time and holds the said material in a compressed state. The crank-shaft is then operated, lifting the clamp-holding bar and releasing all the clamps and doors simultaneously. The doors being thrown open the bale-bands are applied to the cotton or other material in the usual manner, the platen is caused to ascend, and the bale removed from the press.

I do not wish to be limited to the exact arrangement of the clamps G described, as it will be apparent that the same may be reversed. In other words, the clamps may be constructed as shown in Fig. 6, with the short arms g^4 extended on the same side of the pivot or shaft of the clamp as the long arms, in which case the long arms of the clamps will swing outward instead of inward, and consequently the stops of the clamp-holding bar will be arranged so as to embrace the long arms of the clamps when the doors are closed and prevent the same from swinging outward.

Having now described my invention, what I claim as new, and desire to secure by Letters Patent, is—

1. The combination, with the main frame, of a sliding frame connected with and guiding the platen, a steam-cylinder located upon said main frame for actuating the platen and also serving as a guide or means for steadying the movements of said sliding frame, substantially as described.

2. The combination, with the main frame, of a steam-cylinder located above said frame, an inner frame surrounding and sliding upon said cylinder and guiding the press-platen, and a suitable valve and connections for admitting steam to said cylinder to drive the piston thereof in either direction, for the purpose and substantially as described.

3. A press-chamber door composed of serrated slats having their adjacent faces recessed or cut out for a portion of their length, substantially as and for the purpose described.

4. A press-chamber the side walls of which are hinged at their bases to the frame of the press and each composed of serrated slats provided on their adjacent faces with recesses, for the purpose and substantially as described.

5. The doors of the press-chamber, in combination with clamps for holding said doors closed, bars for engaging said clamps, and a crank-shaft for operating said bars for releasing the clamps, substantially as described.

6. The hinged doors of a press-chamber, in combination with pivoted clamps for holding said doors closed, and a pivoted clamp-holding bar by which said clamps are held to their work and released when desired, substantially as described.

7. The combination, with the doors of a press, of pivoted clamps, a clamp-holding bar, and a crank-shaft provided with a lever for actuating it and thereby operating the clamp-holder bar, substantially as described.

In testimony whereof I have hereunto set my hand this 13th day of December, A. D. 1887.

W. J. F. LIDDELL.

Witnesses:
REX. SMITH,
APPLETON P. CLARK.