April 5, 1927. 1,623,531

W. DUBILIER

METHOD AND APPARATUS FOR INTERRUPTING ELECTRICAL CIRCUITS

Filed Nov. 23, 1922

Fig. 1.

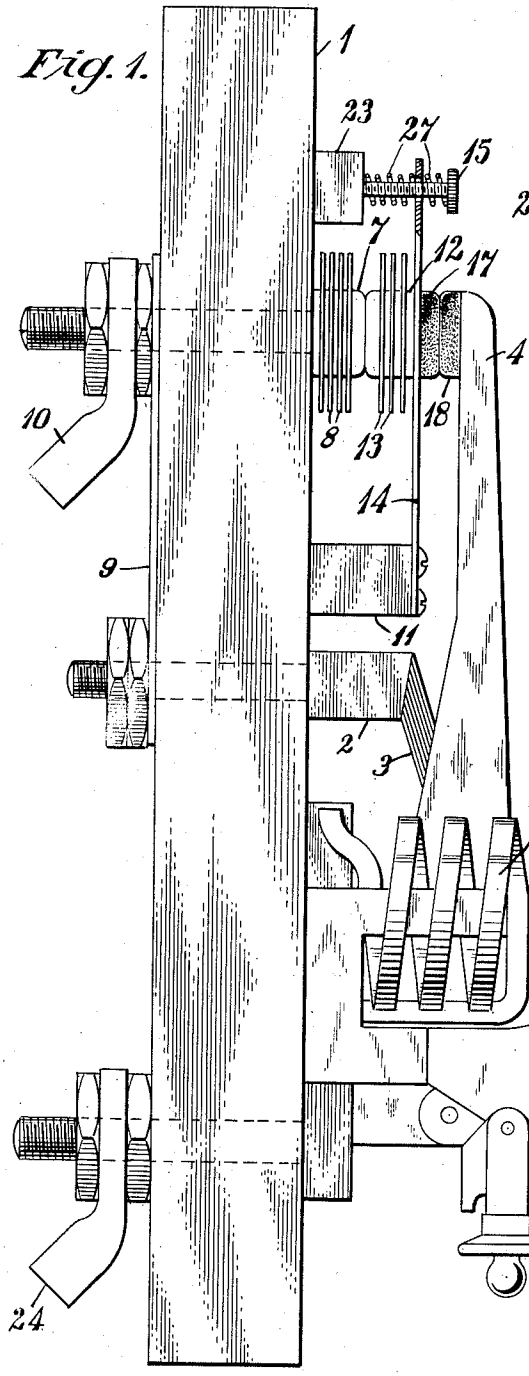


Fig. 2.

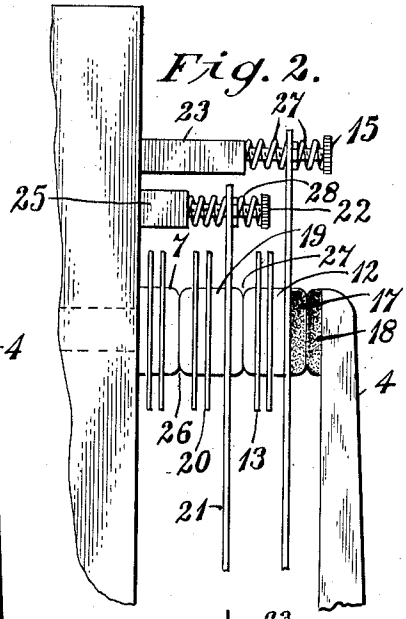


Fig. 3.

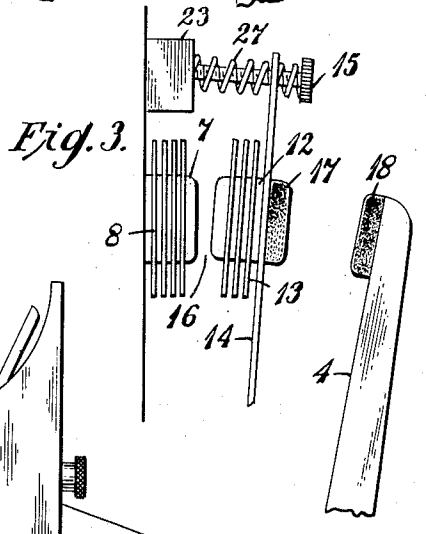





INVENTOR
William Dubilier
BY
H. C. Van Deventer
ATTORNEY

Patented Apr. 5, 1927. 1,623,531

# UNITED STATES PATENT OFFICE.

WILLIAM DUBILIER, OF NEW YORK, N. Y.

## METHOD AND APPARATUS FOR INTERRUPTING ELECTRICAL CIRCUITS.

Application filed November 23, 1922. Serial No. 602,798.

My invention relates to a method of and apparatus for interrupting electrical circuits and dissipating the heat of the arc caused by said interruption.

One of the objects of my invention is to provide a method of the above indicated character which shall be simple, effective and reliable in operation, and in which the apparatus embodies circuit interrupting contacts having arc quenching means in series therewith.

Another object of my invention is to provide means whereby the heat of the arc, due to the interruption of the current, is reduced to a minimum, the terminals of the apparatus being provided with heat radiating means.

Other objects will hereinafter more fully appear.

For the sake of illustration, I have applied my invention to a well known form of circuit interrupter, as illustrated in the accompanying drawing, in which Fig. 1 is a side elevation of a circuit interrupter constructed in accordance with my invention and illustrating the method of operation I claim as new.

Fig. 2 is a view of a modified portion of the mechanism shown in Fig. 1.

Fig. 3 is a view showing the contacts Fig. 1 in the open position.

Like figures of reference denote the same parts wherever they are shown.

Referring to the drawing, the device here shown comprises an insulating panel 1, a main stationary contact member 2, a movable co-operating contact member 3 and a supporting arm 4 for the member 3. The arm 4 is operated in the usual manner by means of a handle 5, and released by any suitable overload device such as the usual coil employed for this purpose and indicated at 6. As the construction and operation of the movable member of such circuit breakers may be varied within wide limits and many such arrangements are known, I do not describe the same.

Carried upon the insulating panel 1 is an auxiliary contact member 7 provided with one or more heat radiating fins 8. This member may be connected to the main stationary contact member 2 by means of the connection 9 and the supporting bolt and terminal 10 for the member 7. The contact surface of the member 7 is preferably and usually of copper.

The panel 1 also carries a support 11, upon which is supported an auxiliary contact 12, which may be equipped with heat radiating fins 13. This contact 12 is supported upon a resilient spring 14 provided with suitable adjusting means such as a screw 15 whereby the tension of the spring 14 may be adjusted, thus determining the extent of the air gap 16 that may occur when terminals 7 and 12 are separated, as shown in Fig. 3.

The spring 14 also carries a suitable arcing contact, such as the carbon member 17, which is adapted to engage a similar member 18, preferably of carbon, mounted in any suitable manner upon the arm 4.

In cases where it appears desirable, the arrangement used in Fig. 2 may be employed, in which a supplemental contact 19 equipped with heat radiating fins 20, is employed and included serially in the circuit. In this case, the contact surfaces on both sides of the auxiliary spring 21 are of copper or other suitable material. An auxiliary adjusting screw 22 is provided for adjusting the air gap between 7 and 19 when the circuit breaker is open, this screw cooperating with a support 25.

When the arrangement shown in Fig. 2 is employed, it is obvious that there are two quenched spark gaps in series with the circuit arcing contacts 17, 18.

It will be observed that the auxiliary contact 12, carried by spring 14, is mounted upon supports 11 and 23, preferably of insulating material; that is to say, the auxiliary contact 12 is not connected in the circuit, except when the interrupter arm 4 is in the closed position shown in Fig. 1. When the circuit interrupter or arcing contacts are open, as shown in Fig. 3, then contact 12 separates from contact 7, thereby introducing the quenched spark gap indicated by numeral 16.

If the arrangement shown in Fig. 2 is employed, then a second quenched gap at 27 will exist between the supplemental contact 19 and the opposed face of 7, as will be observed by tracing the circuit from terminal 10 to the face of contact 7 engaging 19, through contact 19 to the face of contact 12, through 12 to arcing contact 17, and to the engaging face of 18 to arm 4, to bolt 24. The quenched gaps are at 26 and 27 when the contacts are separated.

The foregoing description of a common form of circuit breaker will serve to illus-

trate my invention, which it will be seen consists broadly of the method of introducing a quenched spark gap, or gaps, in series with the usual contact members, where the circuit is usually broken.

I do not describe in detail the function of the quenched gap. The action of such gaps in electrical circuits are well understood, but I do not wish to point out that by mounting the auxiliary contacts, such as 12 and 19, upon a resilient support or supports, and having the surfaces of these contacts of sufficient dimensions to readily radiate heat, that when the breaker arm or other member releases the contacts from engagement, that not only does the small gap forming the quenched gap, and usually not over .010" occur, but by reason of the action of the springs 14, 21, and the supplemental springs 27 and 28 employed in connection with adjusting screws 15, 22, a vibratory action of of the supplemental contacts 12, 19 will take place. This vibratory action causes the auxiliary contacts to pass many times through the critical point, producing the well known arc quenching effect. The arcing distance of these gaps is so small that the heat generated is rapidly conducted away from the center of the arc.

It is obvious that this method of circuit interruption may be applied to all classes of devices in which it is necessary to interrupt an electrical circuit, and where it is desirable at the time of said interruption that the arcing and heat generated shall be reduced to a minimum, and that once this principle or method having been disclosed, that mechanisms for utilizing the same in connection with induction coil interrupters, circuit breakers, elevator motor controls, manual and motor operated switches, and in fact all forms of circuit interrupting apparatus, are mere modifications which come within the scope of the appended claims.

Heretofore, it has not been practical to use metal contacts on many forms of interrupters on account of the contacts pitting. In some cases, the employment of carbon arcing contacts 17 and 18, as used in the illustrative form of interrupter just described, is not desirable. My invention makes it possible to eliminate such carbon contacts in many cases, and enables these contacts to be made of metal, and thereby carry all of the current flowing in the circuit, sometimes eliminating the use of the usual main contacts 2 and 3.

The advantage of circuit interrupter mechanism in which the life of the contacts is prolonged and in which means is provided for radiating the heat generated at the break, is obvious.

I claim as my invention:

1. A circuit interrupter comprising cooperating contact members, operating mechanism therefor, and vibratory arc quenching means cooperating therewith.

2. A circuit interrupting device comprising circuit interrupter mechanism, and a vibratory arc quenching member operated by said mechanism, and included serially in circuit therewith.

3. A circuit interrupting device comprising a switch, vibratory arc quenching means in series therewith, and means for conducting away the heat of the arc.

4. A circuit interrupting device comprising cooperating members having refractory conducting surfaces adapted to form a gap, a member cooperating with said first members to produce a quenched gap in series therewith, and metallic cooperating surfaces between one of said first members and said second member.

In testimony whereof, I have hereunto subscribed my name this 15th day of November, 1922.

WILLIAM DUBILIER.