Nov. 14, 1961 D. R. BARKMAN 3,008,280

WRAPPING MACHINES

Filed Aug. 29, 1958 7 Sheets-Sheet 1

Fig. 1

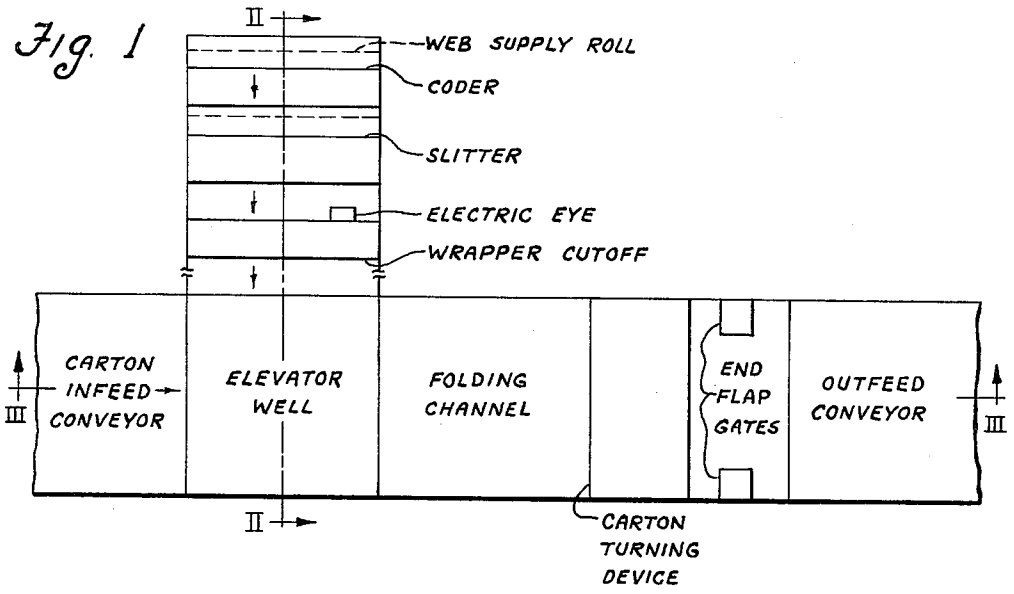

Fig. 2

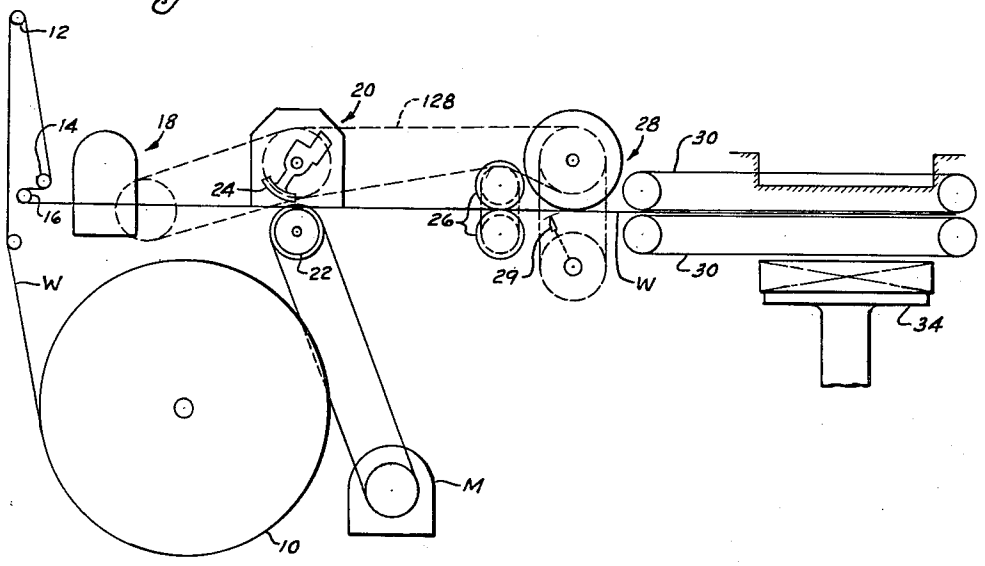

INVENTOR
DAVID R. BARKMAN

BY Chapin & Neal

ATTORNEYS

Nov. 14, 1961 D. R. BARKMAN 3,008,280

WRAPPING MACHINES

Filed Aug. 29, 1958 7 Sheets-Sheet 2

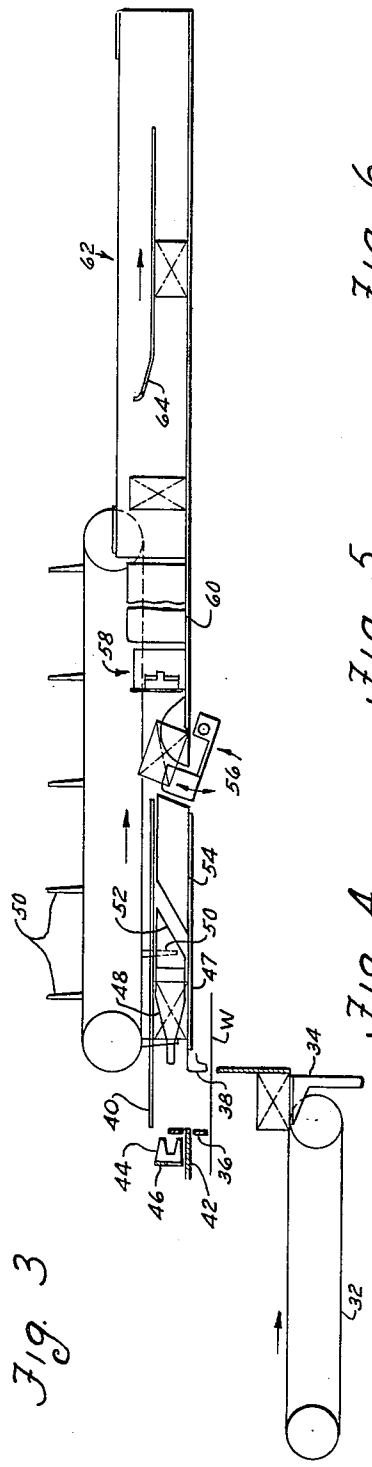

Fig. 3

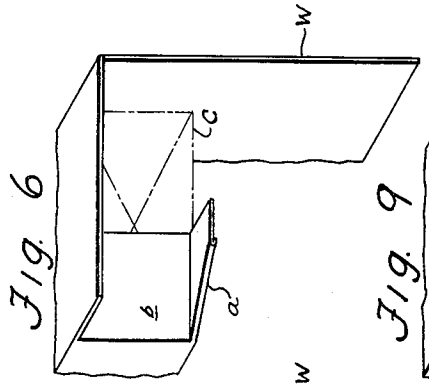

Fig. 6

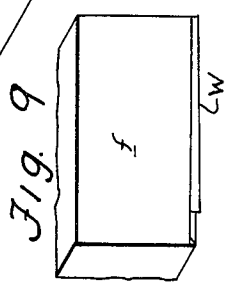

Fig. 9

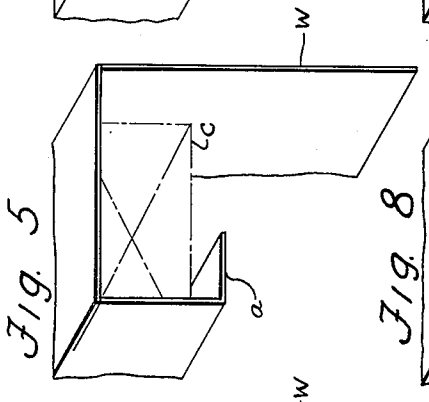

Fig. 5

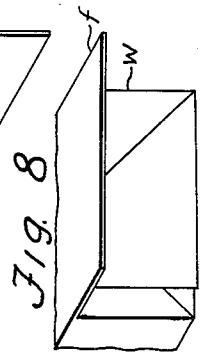

Fig. 8

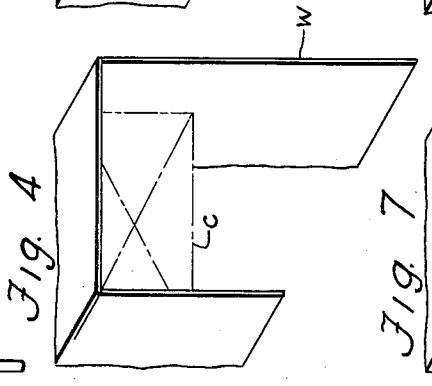

Fig. 4

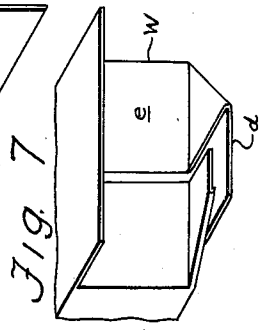

Fig. 7

INVENTOR
DAVID R. BARKMAN

BY Chapin & Neal

ATTORNEYS

Nov. 14, 1961 D. R. BARKMAN 3,008,280

WRAPPING MACHINES

Filed Aug. 29, 1958 7 Sheets-Sheet 3

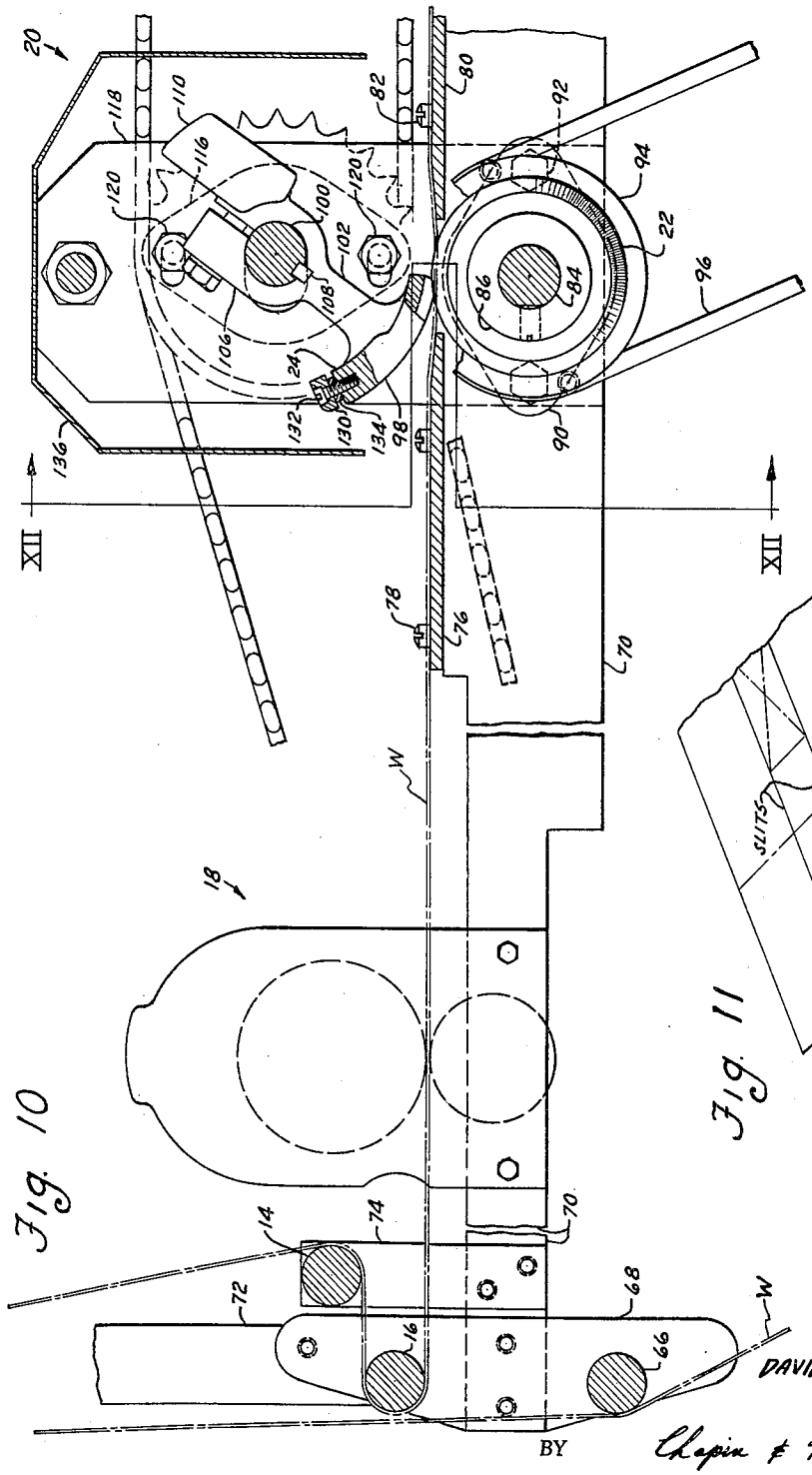

Fig. 10

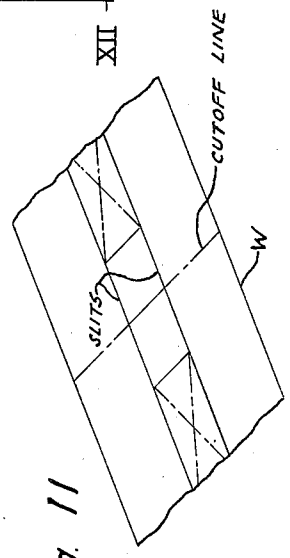

Fig. 11

INVENTOR
DAVID R. BARKMAN

BY Chapin & Neal

ATTORNEYS

Nov. 14, 1961 D. R. BARKMAN 3,008,280

WRAPPING MACHINES

Filed Aug. 29, 1958 7 Sheets-Sheet 4

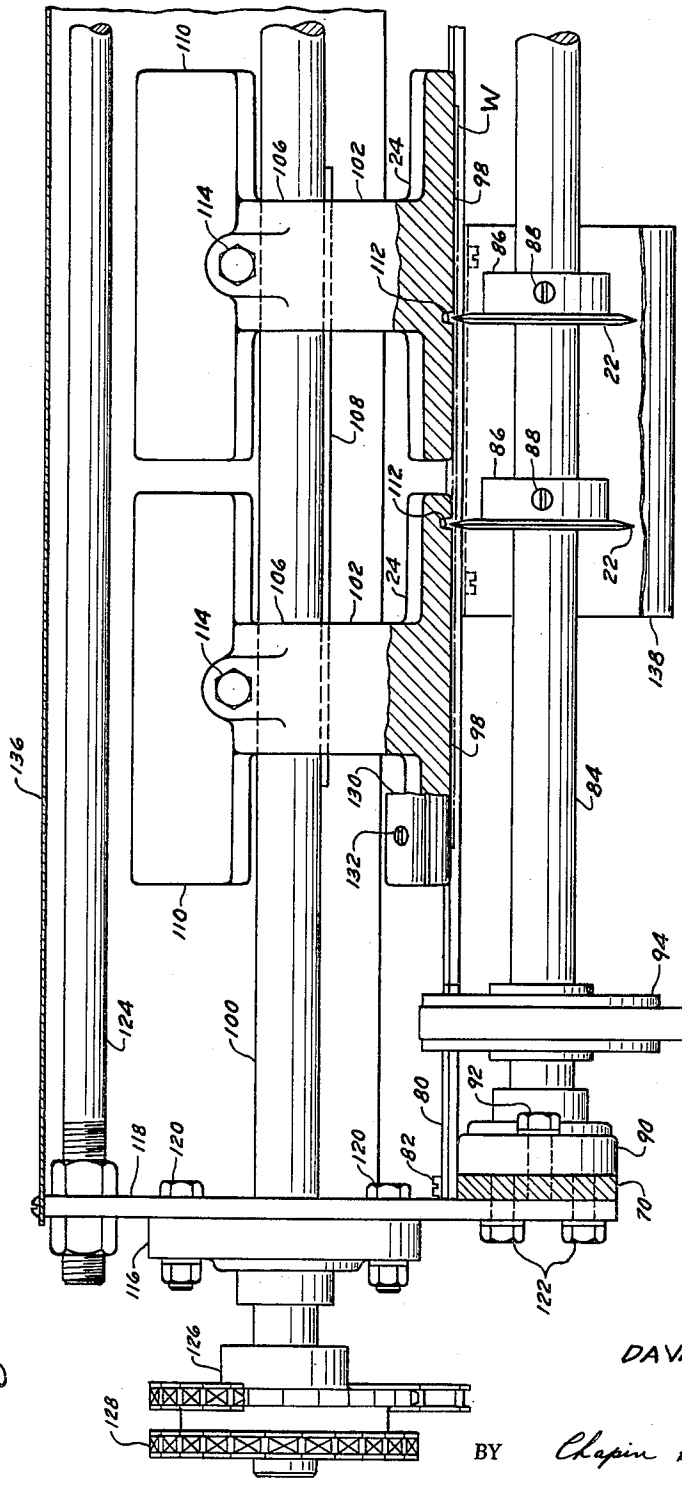

Fig. 12

INVENTOR
DAVID R. BARKMAN

BY Chapin & Neal

ATTORNEYS

Nov. 14, 1961 D. R. BARKMAN 3,008,280

WRAPPING MACHINES

Filed Aug. 29, 1958 7 Sheets-Sheet 5

Fig. 13

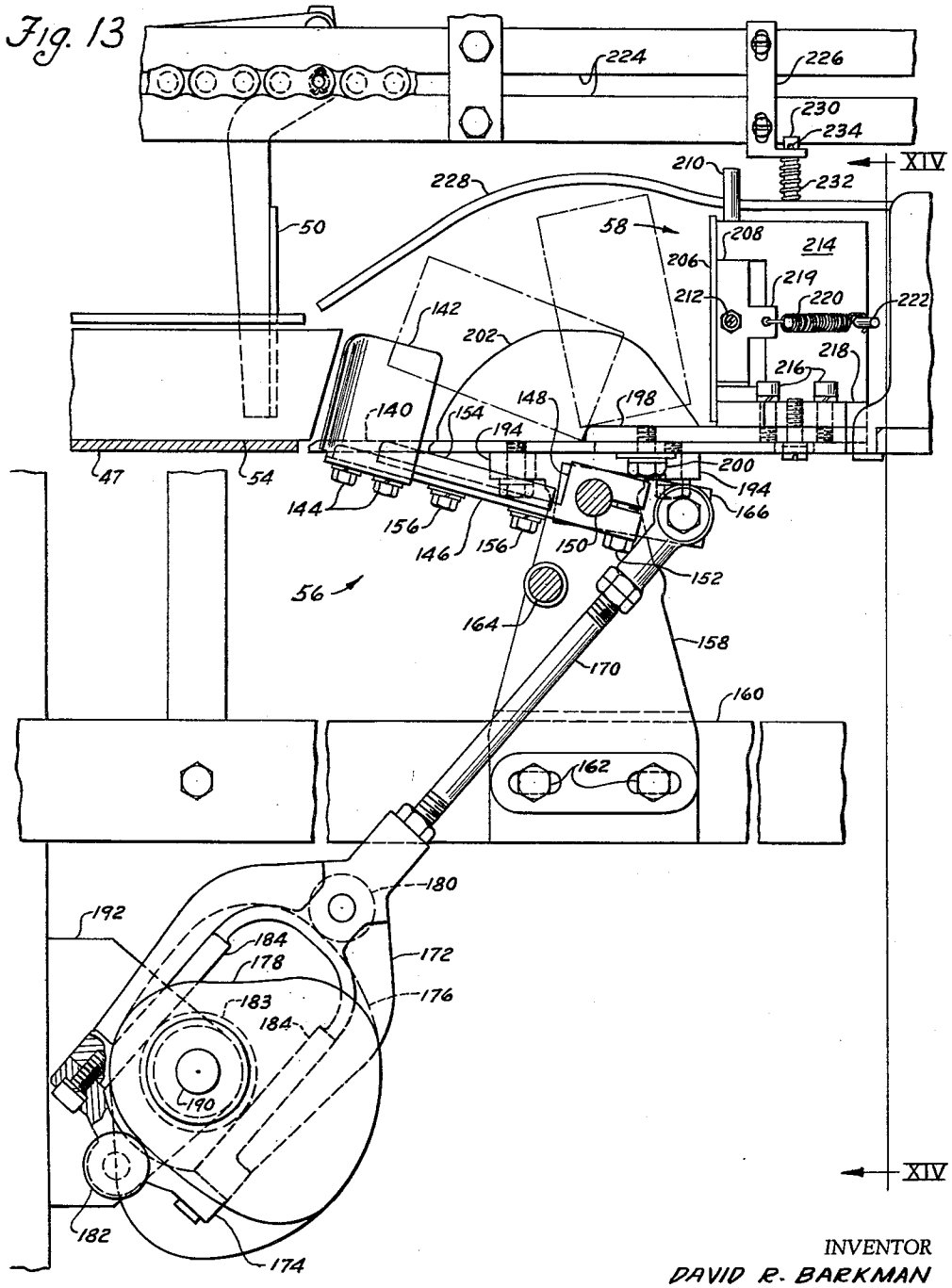

INVENTOR
DAVID R. BARKMAN

BY Chapin & Neal

ATTORNEYS

Nov. 14, 1961 D. R. BARKMAN 3,008,280

WRAPPING MACHINES

Filed Aug. 29, 1958 7 Sheets-Sheet 6

Fig. 14

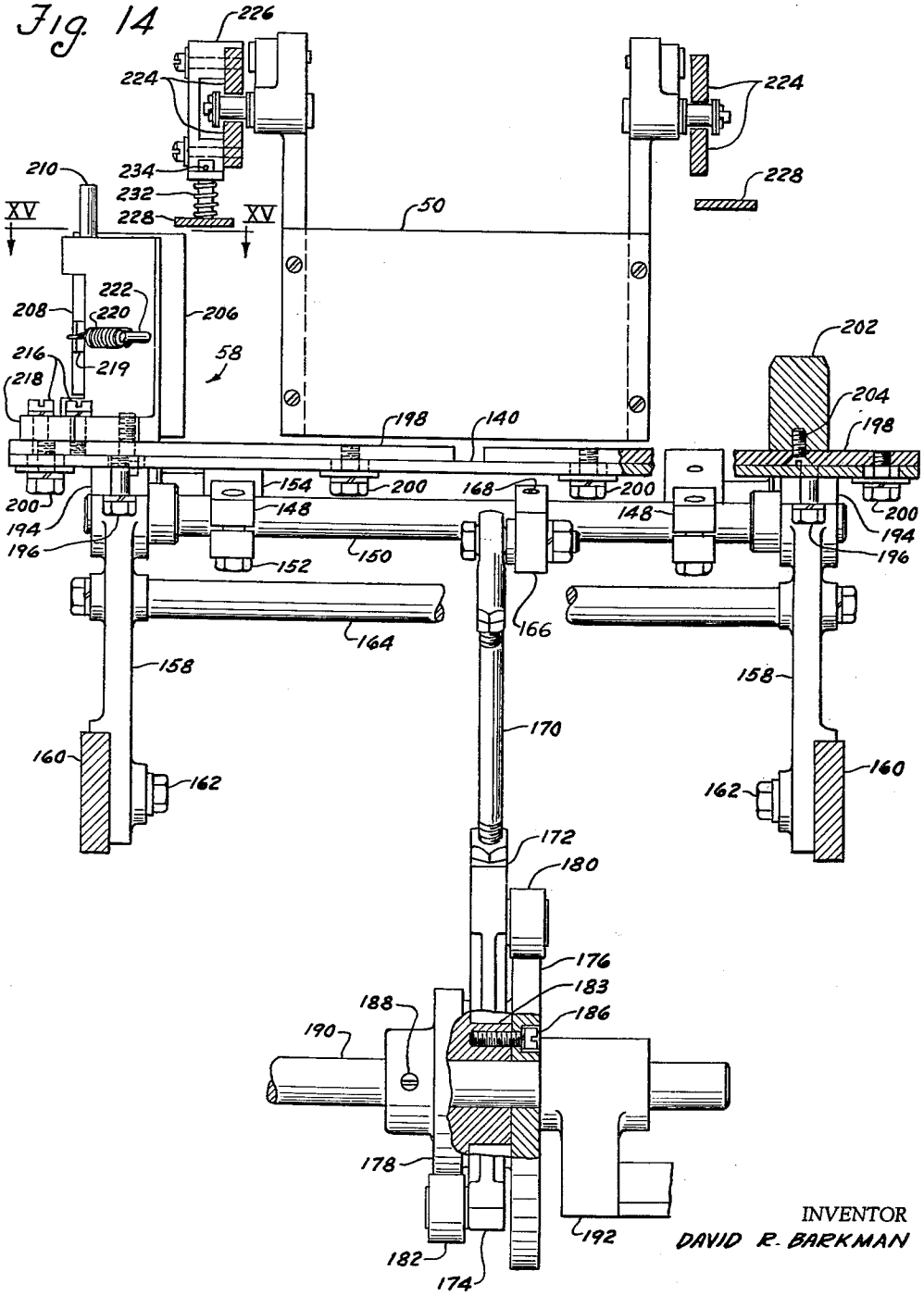

INVENTOR
DAVID R. BARKMAN

BY Cowpin & Neal

ATTORNEYS

Nov. 14, 1961 D. R. BARKMAN 3,008,280

WRAPPING MACHINES

Filed Aug. 29, 1958 7 Sheets-Sheet 7

Fig. 15

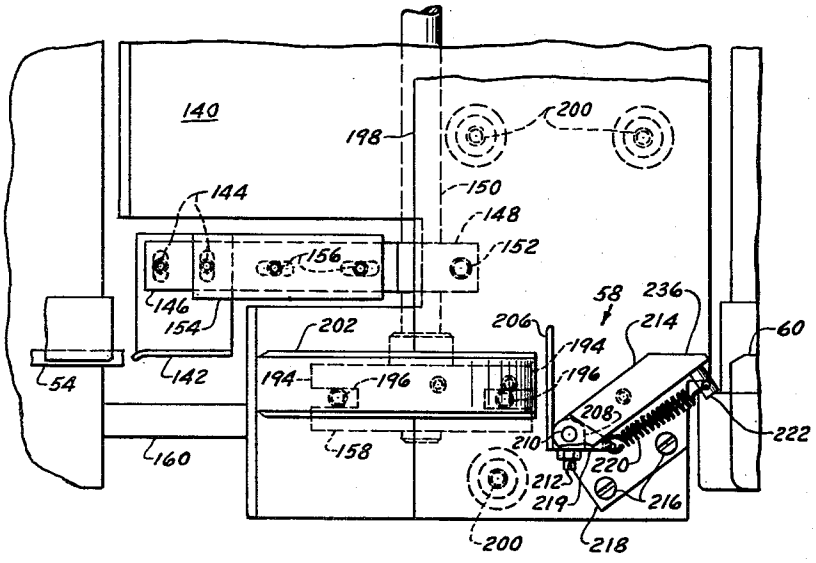

INVENTOR
DAVID R. BARKMAN

BY Chapin & Neal

ATTORNEYS

United States Patent Office 3,008,280
Patented Nov. 14, 1961

3,008,280

WRAPPING MACHINES

David R. Barkman, Longmeadow, Mass., assignor to Package Machinery Company, East Longmeadow, Mass., a corporation of Massachusetts

Filed Aug. 29, 1958, Ser. No. 758,030
11 Claims. (Cl. 53—379)

The present invention relates to improvements in forming the end seal in a wrapping operation.

The invention has for its objects the provision of simplified apparatus for forming an end seal which will be more effective in hermetically sealing the article which is being wrapped and which may be formed at an extremely high rate of operation.

Another object of the invention is to attain the above ends and at the same time minimize the problems of registering printed matter on the end seal of the wrapper relative to the article and further to increase the area of the end seal which will be capable of effectively bearing printed matter.

A further object of the invention is to attain the above ends and further to maintain the level of article flow at substantially the same level as is found in existing wrapping machines.

While the present invention has broad utility in wrapping many diverse articles reference will be made, for illustrative purposes, to the advantages which are to be had in the wrapping of cigarette cartons in accordance with the present teachings. Generally speaking, cigarette cartons in our domestic market do not require any protective wrapping. However, when shipped overseas and particularly to tropical climates, it is necessary to protect the cigarettes from humid conditions to a greater extent than is provided by the wrappings around each individual package. At one time this was accomplished by a heavily waxed paper wrapper which was far from being attractive. Today, it has become the generally accepted practice to wrap cigarette cartons in paper backed metal foil which has printed thereon patterns of heat-sealable cement. These foil wrappers may be very attractively decorated and wrapped about the cigarette cartons on presently available wrapping machines.

The most common of these wrapping machines and the ones capable of operating at sufficiently high rates of operation form the end seal by means of a so-called double point tuck. The double point tuck involves the overlapping of folded edges of the wrapper which makes it difficult to obtain an effective hermetic seal on the end of the carton. Further, the multitude of folds on the end of the carton make registration of printed matter difficult and limit the available area for printed matter.

Cigarette cartons wrapped according to the present invention are characterized by an end seal formed substantially entirely by a single flap of wrapper material folded against the end of the carton from one of the transverse panels thereof. Such an end seal is not, per se, new but the invention contemplates forming such wrappers at a high speed of operation and with a minimum modification of existing wrapping instrumentalities. More particularly, in accordance with the present invention, the web of wrapping material is continuously fed to the wrapping machine, as before, but with the provision of intermittently operating slitters which precut from the wrapper, that portion which is later to provide the flap for sealing the end of the carton. Thereafter, the wrapper is encircled about the carton with portions thereof projecting from all four sides of the carton beyond each of its ends. The portions extending beyond three sides of the carton are folded against each end face of the carton by conventional means. The portion extending beyond one side, preferably the top of the carton, lies in a horizontal

plane and is of a width approximating that of the end face, having been formed by the mentioned slitters. The carton is then advanced to a tipping mechanism which rotates the carton 90° bringing the projecting flap portion into a vertical plane. The carton is then advanced through a pair of gates which wipe the projecting flap against the end of the carton, thereafter this flap is heat sealed to complete the wrapping of the carton.

The above and other related objects and features of the invention including the advantages thereof will be more fully apparent from a reading of the following description of the disclosure found in the accompanying drawings and the particular novelty thereof pointed out in the appended claims.

In the drawings:

FIG. 1 is a block diagram showing the relative relation of the various components of a wrapping machine in which the present invention is incorporated;

FIG. 2 is a diagrammatical showing of components on line II—II in FIG. 1;

FIG. 3 is a diagrammatical showing of components on line III—III in FIG. 1;

FIGS. 4–9 show in progressive fashion the manner in which articles are wrapped in accordance with the present invention;

FIG. 10 is a view on an enlarged scale of a portion of FIG. 2 illustrating certain constructional features of the present invention;

FIG. 11 is a perspective view of a fragmentary portion of the wrapper web after it has passed beyond the mechanism illustrated in FIG. 10;

FIG. 12 is a section taken substantially on line XII—XII in FIG. 10 with certain component parts rotated to a different relative position;

FIG. 13 is an enlarged elevation of mechanism indicated in FIG. 3 with portions of the near side frames of the machine broken away;

FIG. 14 is a section taken substantially on line XIV—XIV in FIG. 13; and

FIG. 15 is a view taken substantially on line XV—XV in FIG. 14.

The overall operation of the wrapping machine incorporating the present invention may best be appreciated from the block diagram of FIG. 1. While the invention is not necessarily limited to wrapping machines of this type, certain features thereof are particularly suited to this pre-existing organization of machine elements for feeding a web of sheet material, cutting individual wrappers therefrom and coordinating the feed of articles with the feed of wrappers to introduce the articles and wrappers into a folding channel as will be apparent to those skilled in the art from the following description.

More particularly, FIG. 1 indicates the wrapper web is fed from a supply roll, past a coder, then past a slitter to a wrapper cutoff device which is registered with printed panels on the web by an electric eye. Individual wrappers are fed from the cutoff device to an elevator well where they are positioned above articles or cartons advanced thereto by an infeed conveyor and positioned on an elevator. The elevator is raised and the wrapper draped about the article and then the article and wrapper are introduced into the folding channel through which the article is advanced and the wrapping operation partially completed. When partially completed, and as is later developed in detail, end flap extensions project laterally from the upper wall or face of the article. Next, the article is rotated 90° by an article turning device to dispose the end flaps vertically so that they may be wiped against the ends of the articles as they are advanced through end flap gates prior to being carried from the machine by an outfeed conveyor.

The wrapper feed system may be further understood

from the diagrammatical showing of FIG. 2 wherein it will be seen that the web *w* is drawn from the web supply roll (**10**) upwardly to a slackener or tightener roll **12** downwardly and around reversing rolls **14**, **16** and then past the coder (**18**). The web next passes by the slitter (**20**) which comprises a pair of transversely spaced rotary knives **22** and rotary depressor members **24** spaced thereabove to intermittently depress the web into engagement with the knives **22** to slit the web along lines spaced apart a distance approximating the width of the end face of the articles to be wrapped.

A pair of feed rolls **26** draws the web *w* from the supply roll **10** and feeds it to the cut off device (**28**) where a rotary knife **29** severs the web *w* into individual wrappers *w* along a transverse line intermediate the lengths of the slits, See FIG. 11, formed by the slitter **20**. The individual wrappers *w* are advanced by feed belts **30** to the elevator well where they are positioned above cartons on an elevator **34**.

The line of carton advance may best be appreciated from FIG. 3 wherein it will be seen that cartons are fed by the infeed conveyor (**32**) onto the elevator **34** at the lower end of the elevator well, with the wrapper *w* positioned thereabove. The elevator **34** is next raised between a spring plate **36** and flapper housing **38** to an upper position limited by a guide rail **40**. As this is done the wrapper *w* is draped about the carton *c* in the fashion shown in FIG. 4. Next the elevator **34** is lowered and the package held in alignment with the entrance of the folding channel by spring loaded catches or flappers (not shown). Next, a bottom plate **42** is advanced to lay the trailing end *a* of the wrapper *w* against the lower face of the carton *c* as indicated in FIG. 5. Thereafter, rear tuckers **44** are advanced to lay the trailing wrapper extension *b* against the end faces of the article as indicated in FIG. 6. After the rear end tucks are thus formed, a cross bar **46**, advancing with the tuckers **42**, engages the rear face of the carton and introduces the carton into the folding channel, as this occurs the leading end *d* of the wrapper is laid against the bottom face of the carton and it is wiped over the flapper housing **38** and onto the bottom plate **47** of the folding channel. Shortly after being introduced into the folding channel, the leading end flap extension *e* is wiped against the end faces of the carton by front tuckers **48** so that the wrapper *w* is folded in the fashion indicated in FIG. 7. Thereafter the carton is advanced by an overhead conveyor, comprising paddles **50**, through the folding channel to a plow **52** which lays the bottom flap extensions of the wrapper against the end face of the carton as is indicated in FIG. 8.

It will be seen that the above-described instrumentalities employing known wrapping techniques, fold the wrapper *w* about the carton *c* with the end extensions from three sides folded in superposed relation against the end face of the article and with the end extension from the top face of the carton being defined by the slits previously formed by the slitting mechanism referred to above. This top extension provides an end flap *f* projecting in a horizontal plane and having an outline approximately matching that of the end face of the carton. The superposed portions of the wrapper carry printed patterns of heat-sealable cement which are activated by heating the bottom plate **47** and by providing heated side walls **54** along the folding channel.

The carton is next advanced to the turning device (**56**) which is oscillated to rotate the carton 90° within the folding channel and thereby dispose the end flaps on the leading side of the carton in a vertical plane. Thereafter the carton is advanced between the end flap gates (**58**) which lay the end flaps against the end faces of the cartons. The end flaps also have heat sealable cement on their inner faces and the sealing of the end flaps is accomplished by advancing the carton between heated plates **60** on either side of the folding channel. Finally the wrapped carton is discharged by the outfeed conveyor (**62**) which comprises a pair of belts trained about vertically disposed rolls and respectively bearing against the end faces of the carton to hold the end flaps in place as the cement hardens. As the carton is advanced by the outfeed conveyor, its upper leading edge is engaged by an angled rail **64** which causes the carton to rotate 90° in reverse direction so that it is again oriented in the same fashion as when it originally entered the folding channel. In this manner it is possible to obtain the desired end flap sealing of the cartons and at the same time discharge them from the wrapping machine, for further handling, in the same plane and with the same relative orientation as was to be had from conventional wrapping machines forming a double point end tuck.

Reference is next made to FIGS. 10 and 12 for a more detailed description of the constructional features of the present invention found in the wrapper feed mechanism. Equivalent components are, in many instances, found on each side of the machine and reference will be made to such fact in the following description; though the drawings illustrate only one side or half of the machine in most all of the figures.

It will be seen (FIG. 10) that the web *w* extends upwardly from the supply roll **10** and around a roll **66** which is rotatably mounted on plates **68** secured to longitudinal side frame members **70**. From the roll **66** the web *w* continues upwardly and around the slackener roll **12** (FIG. 2) and downwardly to the reversing rolls **14** and **16**. The web *w* then extends from the roll **16** in a horizontal plane towards the coder **18** and slitter **20**.

The slackener roll **12** is mounted on the upper ends of posts **72** projecting upwardly from each side frame **70**. The roll **14** is rotatably mounted on bars **74** secured to each side frame **70** and the roll **16** is rotatably mounted on the plate **68**. It will be noted that the disposition of the rolls **14** and **16** is such that the direction of web feed is reversed about an angle of wrap around the roll **16** of 180°. This arrangement has the specific purpose, for reasons which later appear, of substantially eliminating any tendency of the web to curl when it is not under tension. The tendency to curl of course arises from the fact that the wrapper material is supplied from a roll and usually has been in roll form for a period sufficient to impart what might be termed a permanent set which is reflected in the tendency of the wrapper material to curl when removed from the supply roll **10**. By training the moving web *w* around the reversing rolls **28** and **30** the web is bent about a reverse radius and will then tend to be flat when untensioned.

After passing by the coding device **18** the continuously moving web *w* is advanced over a supporting plate **76** which is secured to each side frame **70** as by screws **78**. A second plate **80** is longitudinally spaced from the plate **76** and secured to the side frames **70** by screws **82**. The slitting knives **22** are secured in spaced relation on a transverse shaft **84** disposed intermediate and beneath the spaced plates **76** and **80**. The knives **22** have integral hubs **86** which are threaded into set screws **88** to secure the knives on shaft **84** in desired transverse relation to the web *w* (see also FIG. 12). The shaft **84** is journaled at each end in bearings **90** which are adjustably secured to the side frames **70** by screws **92**. The shaft **84** is continuously rotated by a motor *m* (FIG. 2) which is drivingly connected to a pulley **94** by a belt **96**, the pulley **94** being secured to shaft **84**.

It will be noted that the upper edges of the knives **42** are disposed slightly beneath the upper surfaces of plates **76** and **80** so that the normal plane of travel of web *w* lies above the knives **22**. Slitting of the web *w* is herein accomplished by depressing the continuously moving web *w* out of this normal plane of travel and into contact with the knives **42**.

This end is accomplished by the depressors **24** having web-engaging surfaces **98** preferably formed radially of a shaft **100** which rotates the depressors **24** in timed

relation to movement of the web *w*. The depressors, conveniently are each formed integrally with an arm 102 extending from a split hub 106 which is angularly positioned relative to the shaft 100 by a longitudinal key 108. Also formed integrally with the hubs 106 are counterweights 110 which balance the weight of depressors 24 as they rotate. The depressors 24 are axially positioned on shaft 100 so that peripheral grooves 112, in the web-engaging surfaces 98, are respectively in matching relation with the rotary knives 22. The depressors 24 are held fast in this relation by screws 114 which clamp the split hubs 106 against the shaft 100.

The shaft 100 is rotatably received at each end by bearing blocks 116 which are adjustable secured to bracket plates 118 by screws 120 passing through the illustrated slots therein. The bracket plates 118 are in turn secured to the side frames 70 by screws 122 with their upper ends being held rigid by a tie rod 124. The plates 118 are also slotted to permit passage of the ends of the shaft 62 therethrough and facilitate adjustment of the depressors 24. One end of the shaft 100 has a double sprocket 126 secured thereto which is driven by a chain 128 extending from the web feed and the cut off mechanism 28 (FIG. 2).

The drives for the various elements along the web feed system are interconnected so that the slitter 20 operates in predetermined timed relation with the feed rolls 26 and cut off device 28. This end is achieved by the roller chain and sprocket drive system, including chain 128, diagrammatically indicated in FIG. 2. Further, in accordance with known techniques, the cut off device is registered with printed panels on the web *w* as indicated in the description of FIG. 1.

Thus as the web *w* moves past the slitter 20, the depressors 24 are preferably rotating so that the peripheral speed of the web-engaging surfaces 98 is the same as that of the web. Also, it is preferable that the combined width of the two surfaces 98 be at least as great as the width of the web *w* so that no creases are formed in the web as it is slit. The depressors 24 deflect the traveling web into engagement with the rotating knives 22 and form a pair of slits (FIG. 11) which are spaced apart a distance approximating the width of the end faces of the cartons and which have a length approximating twice the height of the end faces of the cartons. As soon as the depressors 24 rotate out of engagement with the web *w*, it will spring back to a position out of engagement with the knives 22 since the web *w* is maintained under tension by the tightener roll 12 (FIG. 2). Further, the slits are intermediate the printed panels which are later to be positioned on the top faces of the cartons. Thereafter, as the web is advanced to the cut off 28, it is severed into individual wrappers along a line bisecting the slits. Thus each individual wrapper has a pair of slits at each end which will later form end flaps as described heretobefore.

As has been noted, the knives 22 and depressors 24 may be axially shifted on the shafts 84 and 100 respectively thus enabling the proper spacing between slits for a given carton. Also the depressors may be longitudinally adjusted relative to plates 118 in order to get a fine adjustment of the longitudinal relation of the slots relative to the web. Further, means are provided for adjusting the length of the slit and preferably take the form of extension bars 130 (FIGS. 10 and 12) secured to the trailing ends of deflectors 24 by screws 132. The bars 130 increase the effective peripheral length of the surfaces 98 and may be adjustably set for the desired length of slit by the use of spacers 134 of the proper thickness.

In passing it will be noted that a protective sheet metal guard 136 is secured to the brackets 118 and overlies the rotating depressors 24. Also a sheet metal guard 138 encloses the knives 22 (FIG. 12 only) so that they cannot be accidentally contacted. Each wrapper after having been formed with slitted end flaps as above-described is wrapped about a carton in the manner above-described to obtain the condition illustrated in FIG. 8.

It is in this condition that partially wrapped cartons are advanced by the conveyor paddles 50 to the carton turning device 56 illustrated in detail in FIGS. 13–15. The end flaps from the tops of the cartons are disposed in a horizontal plane extending above the heated side plates 54. At this point note will be taken that these end flaps are substantially flat and for that reason remained clear of the above-described instrumentalities which folded the wrapper extensions in superposed relation on the end faces of the carton. The flat condition of the end flaps is the result of the web *w* having been passed around the reversing rolls 14 and 16 as previously described.

Each carton is advanced from the heated platform bottom 47 which seals the bottom seam of the wrapper and then onto a cooling platform formed by a plate 140. The plate 140 is appropriately recessed at each side (FIG. 15) to provide clearance for tippers, each comprising (FIGS. 13 and 15) a side plate 142 secured by screws 144 to an arm 146 having a split hub 148 which is clamped to a cross shaft 150 by a screw 152. A carton engaging member or striker 154 is longitudinally grooved to receive the arm 146 and is secured to the upper surface thereof by screws 156. The ends of shaft 150 are journaled on brackets 158 secured to frame members 160 by screws 162 with a tie rod 164 spacing the brackets 158 apart and lending rigidity thereto.

Oscillatory tipping movement is imparted to the shaft 150 by a cam and linkage arrangement (FIGS. 13 and 14) which comprises an arm 166 clamped on shaft 118 by a screw 168 intermediate the described tippers. A link 170 is pivotally connected at its upper end to the outer end of arm 166 and is threaded at its lower end into a yoke 172. The yoke 172 includes an end cap 174 and is disposed between a pair of conjugate cams 176—178, followers 180—182 carried thereby respectively engage said cams. Cam 178 has a circular hub 183 which spaces the cam 176 therefrom and which is engaged by parallel bearing surfaces 184 formed on the yoke 172 to assure that the followers 180–182 will bear against their respective cams. The cam 176 (FIG. 14) is secured by screws as at 186 to the hub 183 of cam 178 which in turn is secured by a set screw 188 to a cross shaft 190. The shaft 190 is appropriately journaled at each end by frame brackets as the illustrated bracket 192 and is rotated in timed relation to movement of cartons along the folding channel as by a chain and sprocket drive (not shown) from the drive for the overhead conveyer.

The brackets 158 support the plate 140 and the end flap gates in a manner which will now be described in detail. The brackets 158 have arms 144 (FIG. 13) which are longitudinally slotted to receive screws 196 (FIGS. 14 and 15) threaded into the underside of the plate 140. This arrangement permits the plate 108 and all parts mounted thereon to be longitudinally adjusted relative to the folding channel. A pair of stub plates 198 are secured in side by side relation on the plate 108 by screws 200 which pass through enlarged holes in the plate 140 and are threaded into the stub plates 198. This arrangement is for convenience in adjusting the stub plates 198 relative to each other and relative to the plate 140.

A fold retainer 202 is mounted by screws 204 at the forward end of each stub plate 198 in the manner illustrated in FIG. 14. The end flap gates 58 are disposed rearwardly of the fold retainers 202 and each comprises an inwardly directed plate 206 extending from a hub 208. A vertically disposed pivot pin 210 is received by the hub 208 and held fast therein by a set screw 212. The pivot pin 210 is journaled at each end in an angularly disposed bracket 214 secured to the stub plates 198 by screws 216 passing through a bracket flange 218 and threaded into the stub plate. As can best be seen from FIG. 13, the hub 208 is provided with a tail 220 which is held against

a recessed portion of the bracket 214 by a tension spring 220 connected at its other end to a spring pin 222 projecting from the bracket 214. In this fashion the gate plate 206 is yieldingly maintained in a position normal to the path of advance of the cartons (FIG. 15).

It will also be seen that the overhead conveyor comprises a pair of vertically spaced bars 224 on either side of the folding channel to guide the paddles 50. Brackets 226 (only one is shown) are secured to the bars 224 (FIGS. 13 and 14) to yieldingly support guide rails 228. More particularly, a pin 230 extending from rail 228 is slidably mounted in each bracket 226 and a compression spring 232 urges the rail 228 downwardly to a position limited by a cross pin 234 in the pin 232.

The action of the carton turning device 56 and end flap gates 58 in sealing off the end of the carton in the fashion indicated in FIG. 9 may best be summarized as follows. A carton is advanced to the turning device 56 by one of the conveyor paddles 50 with the wrapper *w* disposed in the fashion indicated in FIG. 8, i.e. the top wrapper extension or end flap is disposed in a horizontal plane. The carton is advanced until the leading edge thereof is closely adjacent the forward edges of the stub plates 198. At this time, the timed relationship for the drive of cam shaft 190 is such that the described cam and linkage arrangement will cause the shaft 150 to be rotated in a clockwise direction and in so doing the upper edge of the striker 154 carried by arm 146 will engage the lower face of the carton. Continued rotative movement of the carton will result in the leading lower end of the carton engaging the stub plates 198 and cause the carton to be rotated 90° within the folding channel as indicated by the phantom showings in FIG. 13. It will be noted that the upper guide rails 228 are curved to approximate the path of movement of the upper trailing edge of the carton so that the lower leading edge of the carton will be forced into engagement with the stub plates 198 thereby assuring the described turning movement of the carton. It will also be noted that the rate of movement of the turning device in effecting the described rotation of the carton is sufficiently rapid to carry the carton ahead of the continuously moving paddle 50 so that the carton is disposed with the end flap in a vertical plane and extending from the leading face of the carton prior to the carton being again advanced by the paddle 50.

It will be noted that the wrapper extensions superposed against the end face of the article (FIG. 8) are at all times confined during this rotative movement of the carton to provide sufficient time for the heat sealable cement (activated by heated plates 54) to set without the danger of the wrapper extensions breaking free. More particularly, this can be noted from the arrangement (FIG. 13) of the fold retainers 202 and the tipper side plates 142 (carried by arms 146). The superposed wrapper extensions on the leading end of the carton are confined by the fold retainers 202 while the side plates 142 retain the superposed wrapper extensions on the trailing end of the carton. The fold retainers 202 are roughly semi-circular in cross section to accommodate swinging movement of the side plates 42 as the carton is rotated in the manner just described.

Once the end flaps are vertically disposed or substantially so, the tippers are returned to the position illustrated in FIG. 13, by the described conjugate cam arrangement preparatory to receiving the next succeeding carton by oscillatory movement imparted to the shaft 150.

Thereafter the rotated carton is advanced through the end flap gates 58. It will be noted that preferably the gate plates 206 extend into obstructive relation with the carton itself so that as the carton is advanced into engagement with the gate plates 206 they will yieldingly swing outwardly of the folding channel against the action of spring 220 and in so doing will firmly lay the end flaps against the superposed wrapper extensions covering over the end face of the carton and upon continued advance of the carton this end face will be wiped between surfaces 236 on the brackets 214 which are spaced apart a distance approximating the width of the cartons. Thereafter, the carton will be advanced to the heat sealing element 60 (FIGS. 15 and 3) to activate heat sealable cement which is printed on the inner face of the end flaps thereby securely sealing the ends of the cartons in the fashion indicated in FIG. 9. Thereafter, the cartons are carried to to the outfeed conveyor 62 (FIG. 3) where the angled bar 64 reorients the carton to its original relative position so that it may be fed from the wrapping machine in at least substantially the same plane and condition as was found in prior machines.

It will be noted that the present end flap seal provides a greater area free of folds for bearing printed matter and further because of the freedom of folds on the end faces of the article the problem of registering printed matter is minimized or eliminated.

Having thus described the invention what is claimed as novel and desired to be secured by Letters Patent of the United States is:

1. In a wrapping machine, a horizontal folding channel, a continuously moving overhead conveyor comprising spaced paddles for advancing articles through the folding channel with each article being enfolded in a wrapper and wrapper extensions from all but the top face of the article being folded against the end faces of the article, the extensions from the top face of the article projecting as end flaps in a horizontal plane and the folded wrapper extensions being heat-sealable to retain said folded relationship, said folding channel including on each side heated members engaging the folded wrapper extensions, a relatively low stub plate mounted on the floor of the folding channel and providing an abutment against which the lower edge of each article is advanced, an arm mounted on either side of the folding channel and swingable from therebeneath to engage the trailing end portion of the article and rotate the article 90° within the folding channel about its lower leading edge and means for so swinging said arms at a rate sufficient to carry the article ahead of its conveyor paddle and orient the article for continued advancement by the same paddle with the top face of the article as its leading face and with the end flaps in a vertical plane, guide rails formed generally radially of the abutment of said stop plate for confining movement of the trailing upper edge of the article to assure rotation thereof, a stationary fold retainer disposed on either side of the folding channel and having an upper surface formed generally radially of said abutment on a radius approximating the height of the end face of the article and with the inner faces of said fold retainers being spaced apart the width of the article and adapted to confine the folded wrapper extensions on the leading portion of said end faces in folded relation and cool same as the article is rotated, a fold retaining plate secured to each of said swinging arms, said fold retaining plates being spaced apart the width of the article to confine the folded wrapper extensions on the trailing portions of the end face of the article in folded relation and cool same as the article is rotated and means operative upon continued advance of the article for laying the end flaps against the end faces of the article.

2. In a wrapping machine, means for advancing articles along a horizontal folding channel with each article being enfolded in a wrapper, and wrapper extensions from all but the top face of the article being folded against the end faces of the article with the wrapper extensions from the top face of the article projecting as end flaps in a horizontal plane, the folded wrapper extensions being heat-sealable to retain said folded relationship, said folding channel including on each side heated members engaging the folded wrapper extensions, relatively low abutment means on the floor of the folding channel against which the lower leading edge of each article is advanced and means for tilting the trailing end of the article to

pivot it upwardly and rotate the article about its lower leading edge 90° within the folding channel, thus disposing its top face as its leading face with the end flaps in a vertical plane and stationary means disposed on either side of the folding channel and having an upper surface formed generally radially of said abutment means, said confining means holding the folded wrapper extensions on the leading portion of said end faces in folded relation and cooling same as the article is rotated and a second confining means carried by said tilting means for confining the folded wrapper extensions on the trailing portions of the end face of the article as it is so rotated thereby cooling same and means operative upon continued advance of the article for laying the end flaps against the end faces of the article.

3. In a wrapping machine, a horizontal folding channel, a continuously moving overhead conveyor comprising spaced paddles for advancing articles through the folding channel with each article being enfolded in a wrapper and wrapper extensions from all but the top face of the article being folded against the end faces of the article with the extensions from the top face of the article projecting as end flaps in a horizontal plane, a pair of stub plates mounted in side by side relation on the floor of the folding channel and with their leading edges lying on a common transverse line to provide a relatively low abutment edge against which the lower leading edge of each article is advanced, a transverse shaft disposed generally beneath the abutment edge of said stub plates, a pair of arms extending from said shaft towards the infeed side of said stub plates, one of said arms being on one side of the folding channel and the other of said arms being on the other side of said folding channel, said arms having striker surfaces engageable with the trailing end portion of the article upon rotative movement of said transverse shaft to rotate the article 90° within the folding channel, means for oscillating said shaft in timed relation to the movement of said conveyor paddles and at a rate sufficient to carry each article ahead of its conveyor paddle and orient the article for continued advancement by the same paddle with the top face of the article disposed as its leading face and with the end flaps in a vertical plane, said shaft oscillating means being adapted to return said arms beneath the floor of the folding channel prior to the advancement of the next successive article thereto, guide rails one on either side of the folding channel and bent generally radially of the abutment edge of the stub plates for confining movement of the trailing upper edge of the article to assure rotation of the article and end flap gates mounted on each stub plate, said end flap gates each comprising a bracket secured to said stub plates, a vertically disposed pivot pin journaled in said brackets, a hub receiving said pivot pin, a gate plate secured to said hub and disposed generally normal to said folding channel, said gate plate having a height approximating the height of the top face of the article, a tension spring secured at one end to said bracket and urging said gate plate to said position normal of the folding channel, said spring yieldingly resisting swinging movement of the gate plate outwardly of said folding channel as each end flap is laid against the end faces of the article by the gate plates upon the article being advanced therepast.

4. In a wrapping machine, a horizontal folding channel, a continuously moving overhead conveyor comprising spaced paddles for advancing articles through the folding channel with each article being enfolded in a wrapper and wrapper extensions from all but the top face of the article being folded against the end faces of the article, the extensions from the top face of the article projecting as end flaps in a horizontal plane, a relatively low stub plate mounted on the floor of the folding channel and providing an abutment edge against which the lower leading edge of each article is advanced, an arm mounted on either side of the folding channel and swingable from therebeneath to engage the trailing end portion of the article and rotate the article 90° within the folding channel about its lower leading edge which is engaged by said stub plate, means for so swinging said arms at a rate sufficient to carry the article ahead of its conveyor paddle and orient the article on said stub plate for continued advancement by the same paddle with the top face of the article as its leading face and with the end flaps in a vertical plane, guide rails bent generally on a radius from the abutment edge of said stub plate and spaced therefrom to confine the upper trailing edge of the article and thus assure rotation of the article and an end flap gate on each side of the folding channel and operative upon continued advance of the article to lay the end flaps against the end faces of the article, each end flap gate comprising a gate plate disposed generally normal to said folding channel and pivotally mounted about a vertical axis disposed outwardly of the folding channel, said gate plates having a height approximating the height of the top face of the article and spring means yieldingly resisting swinging movement of each gate plate outwardly of said folding channel as each end flap is laid against the end faces of the article upon the article being advanced therepast.

5. In a wrapping machine, a horizontal folding channel, a continuously moving overhead conveyor comprising spaced paddles for advancing articles through the folding channel with each article being enfolded in a wrapper and wrapper extensions from all but the top face of the article being folded against the end faces of the article, the extensions from the top face of the article projecting as end flaps in a horizontal plane, a relatively low stub plate mounted on the floor of the folding channel and providing an abutment edge against which the lower leading edge of each article is advanced, an arm mounted on either side of the folding channel and swingable from therebeneath to engage the trailing end portion of the article and rotate the article 90° within the folding channel about its lower leading edge, means for so swinging said arms at a rate sufficient to carry the article ahead of its conveyor paddle and orient the article for continued advancement by the same paddle with the top face of the article as its leading face and with the end flaps in a vertical plane, guide rails formed generally radially of the abutment edge of said stub plate for confining movement of the trailing upper edge of the article to assure rotation thereof and means operative upon continued advance of the article for laying the end flaps against the end faces of the article.

6. In a wrapping machine, a horizontal folding channel, a continuously moving overhead conveyor comprising spaced paddles for advancing articles through the folding channel with each article being enfolded in a wrapper and wrapper extensions from all but the top face of the article being folded against the end faces of the article, the extensions from the top face of the article projecting as end flaps in a horizontal plane, relatively low abutment means on the floor of the folding channel against which the lower leading edge of each article is advanced, an arm swingable from beneath the folding channel to engage the trailing end portion of the article and rotate the article 90° within the folding channel about its lower leading edge, means for so swinging said arm at a rate sufficient to carry the article ahead of its conveyor paddle and orient the article for continued advancement by the same paddle with the top face of the article disposed as its leading face and with the end flaps in a vertical plane, guide means formed generally radially of said abutment means for confining movement of the trailing upper edge of the article to insure rotation thereof, and means operative upon continued advance of the article for laying the end flaps against the end faces of the article.

7. In a wrapping machine, means for advancing articles along a horizontal folding channel with each article being

enfolded in a wrapper and wrapper extensions from all but the top face of the article being folded against the end faces of the article, the wrapper extensions from the top face of the article projecting as end flaps in a horizontal plane, relatively low abutment means on the floor of the folding channel against which the lower leading edge of each article is advanced, means for tilting the trailing end of the article to pivot it upwardly and rotate the article about its lower leading edge 90° within the folding channel thus disposing the top face of the article as its leading face with the end flaps in a vertical plane, and means operative upon continued advance of the article for laying the end flaps against the end faces of the article.

8. In a wrapping machine, a horizontal folding channel, a continuously moving conveyor comprising spaced flights for advancing articles through the folding channel with each article being enfolded in a wrapper and wrapper extensions from all but the top face of the article being folded against the end faces of the article, the wrapper extensions from the top face of the article projecting as end flaps in a horizontal plane, means for carrying each article ahead of its conveyor flight and rotating it 90° within the folding channel to dispose its top face as its leading face with the end flaps disposed in a vertical plane, said turning and rotating means positioning the article for further advancement by the same conveyor flight and means operative upon continued advance of the article for laying the end flaps against the end faces of the article.

9. In a wrapping machine, means for advancing articles along a horizontal folding channel with each article being enfolded in a wrapper and wrapper extensions from all but the top face of the article being folded against the end faces of the article, the wrapper extensions from the top face of the article projecting as end flaps in a horizontal plane, means for turning each article within the folding channel 90° about its lower leading edge to dispose the top face of the article as its leading face with the end flaps disposed in a vertical plane and means operative upon continued advance of the article for laying the end flaps against the end faces of the article and means for rotating the article 90° in a reverse direction to bring its top face back to an uppermost position and discharging the article thus oriented.

10. In a wrapping machine, means for advancing articles along a horizontal folding channel with each article being enfolded in a wrapper and wrapper extensions from all but the top face of the article being folded against the end faces of the article, the wrapper extensions from the top face of the article projecting as end flaps in a horizontal plane, means for turning each article within the folding channel about its lower leading edge to dispose the top face of the article as its leading face with the end flaps disposed in a vertical plane and an end flap gate on each side of the folding channel and operative upon continued advance of the article for laying the end flaps against the end faces of the article, each end flap gate comprising a gate plate disposed generally normal to said folding channel and pivotally mounted about a vertical axis disposed outwardly of the folding channel, said gate plate having a height approximating the height of the top face of the article and spring means yieldingly resisting swinging movement of each gate plate outwardly of said folding channel as each end flap is laid against the end faces of the article upon the article being advanced therepast.

11. In a wrapping machine, means for advancing articles along a horizontal folding channel with each article being enfolded in a wrapper and wrapper extensions from all but the top face of the article being folded against the end faces of the article, the folded wrapper extensions being heat-sealable to retain said folded relation, the wrapper extensions from the top face of the article projecting as end flaps in a horizontal plane, said folding channel including on each side heated members engaging the folded wrapper extensions to heat seal these wrapper extensions, means for turning each article within the folding channel to dispose the top face of the article as its leading face with the end flaps vertically disposed, and means for confining said wrapper extensions and cooling same as the article is so rotated and means operative upon continued advance of the article for laying the end flaps against the end faces of the article.

References Cited in the file of this patent

UNITED STATES PATENTS

968,146	Giroud	Aug. 23, 1910
1,196,094	Fischer	Aug. 29, 1916
1,352,221	Riefsnyder	Sept. 7, 1920
1,675,247	Brust	June 26, 1928
1,698,585	Fischer	Jan. 8, 1929
1,835,547	Wetmore	Dec. 8, 1931
2,144,265	Milmoe	Jan. 17, 1939
2,149,400	Mazer	Mar. 7, 1939
2,153,483	Rose	Apr. 4, 1939
2,441,757	Doering et al.	May 18, 1948
2,591,199	Roffey et al.	Apr. 1, 1952
2,617,240	Monaco	Nov. 11, 1952
2,759,543	Conti	Aug. 21, 1956