Nov. 22, 1949 C. FIELD 2,488,529

METHOD AND APPARATUS FOR MAKING ICE

Filed June 5, 1944 3 Sheets-Sheet 1

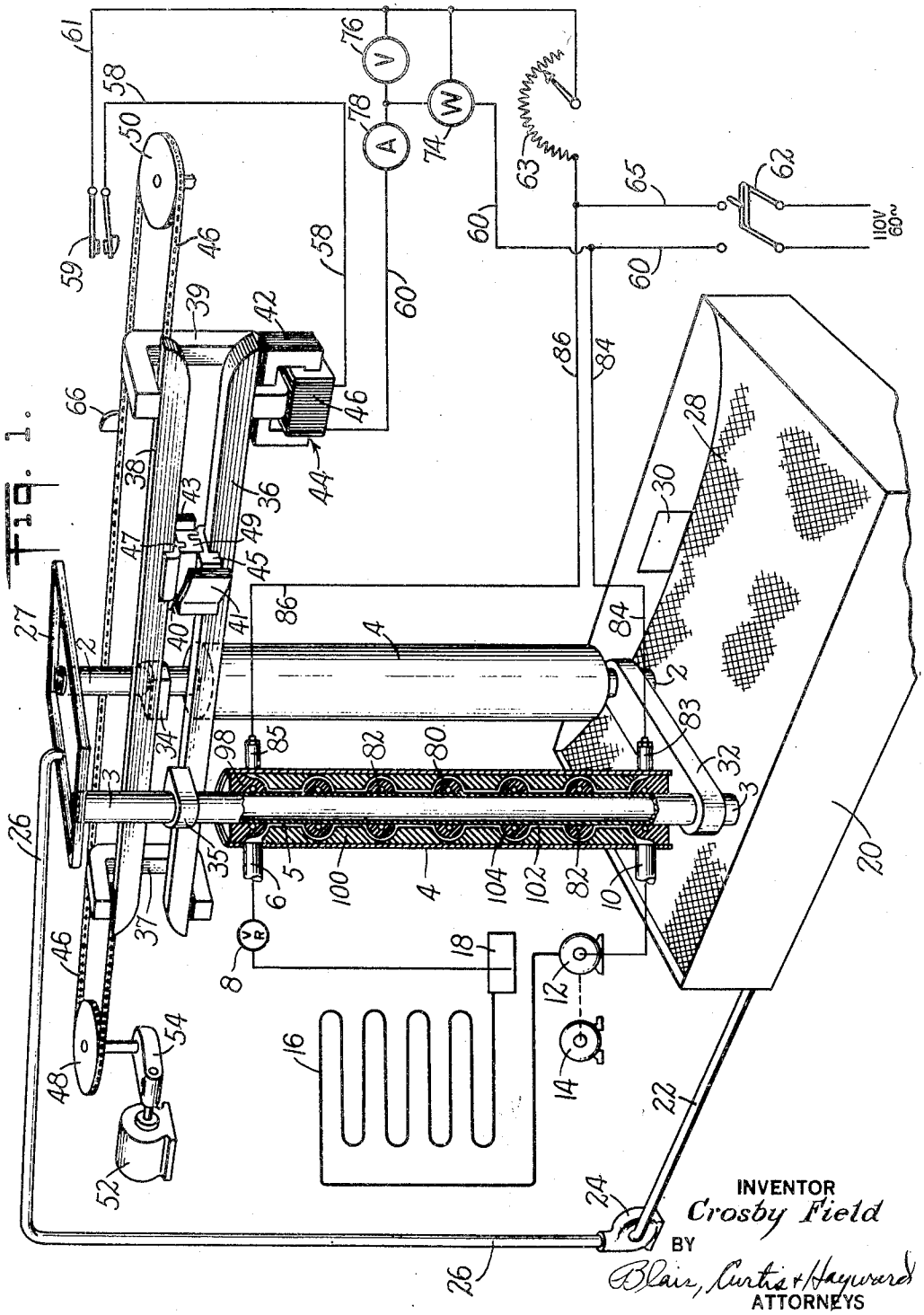

Fig. 1.

Nov. 22, 1949 C. FIELD 2,488,529

METHOD AND APPARATUS FOR MAKING ICE

Filed June 5, 1944 3 Sheets-Sheet 2

Fig. 2.

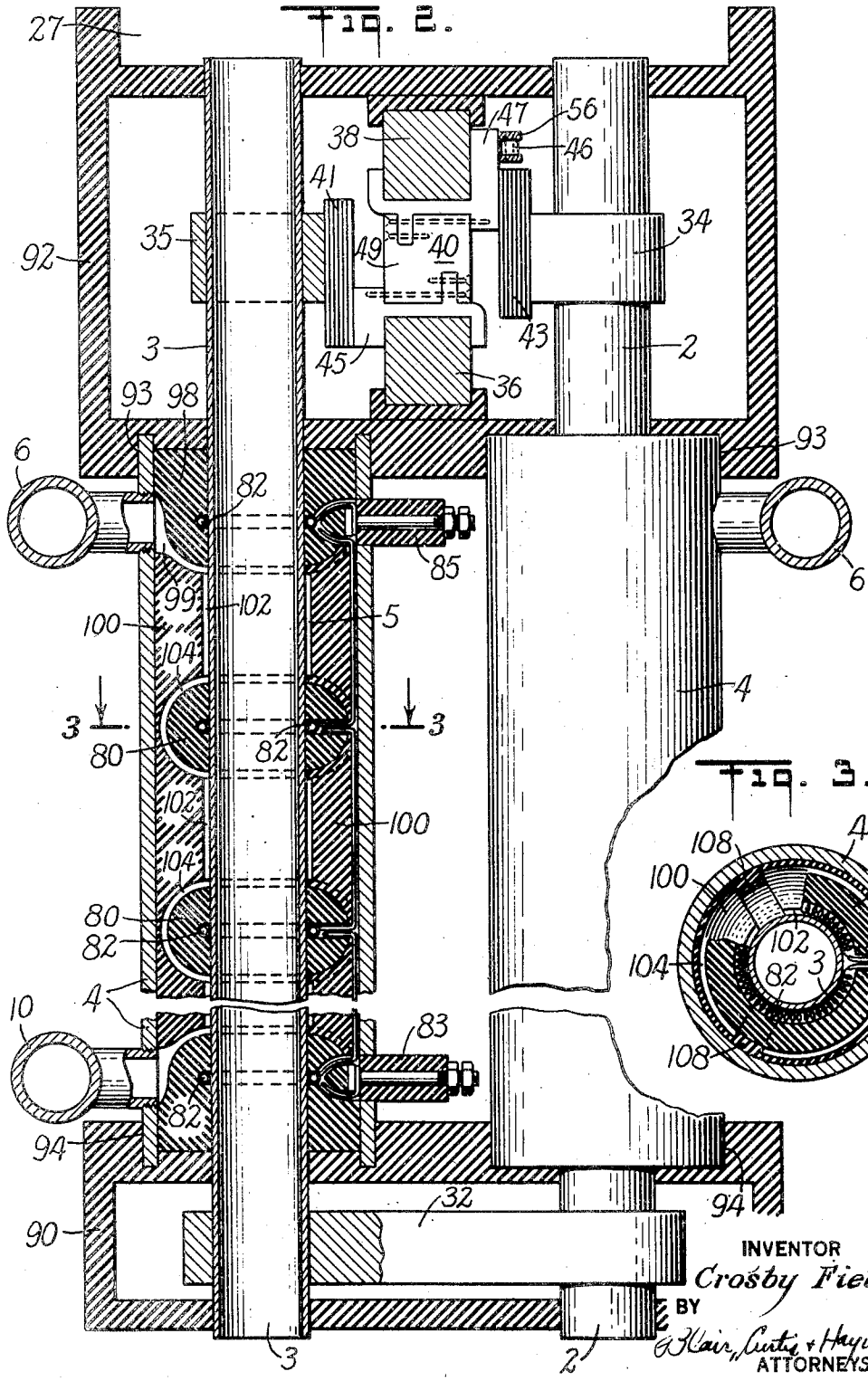

Fig. 3.

INVENTOR
Crosby Field
BY
Blair, Curtis & Hayward
ATTORNEYS

Nov. 22, 1949 C. FIELD 2,488,529

METHOD AND APPARATUS FOR MAKING ICE

Filed June 5, 1944 3 Sheets-Sheet 3

Fig. 4.

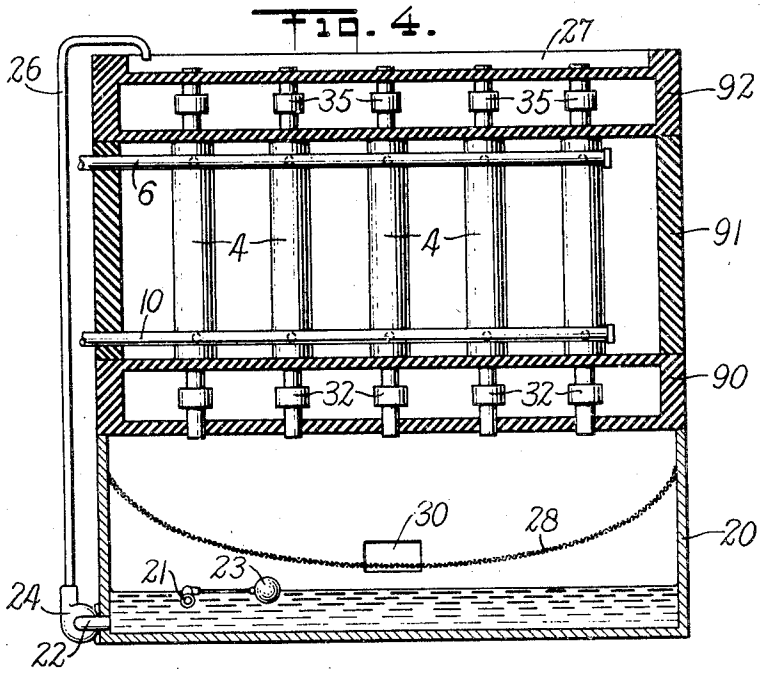

Fig. 5.

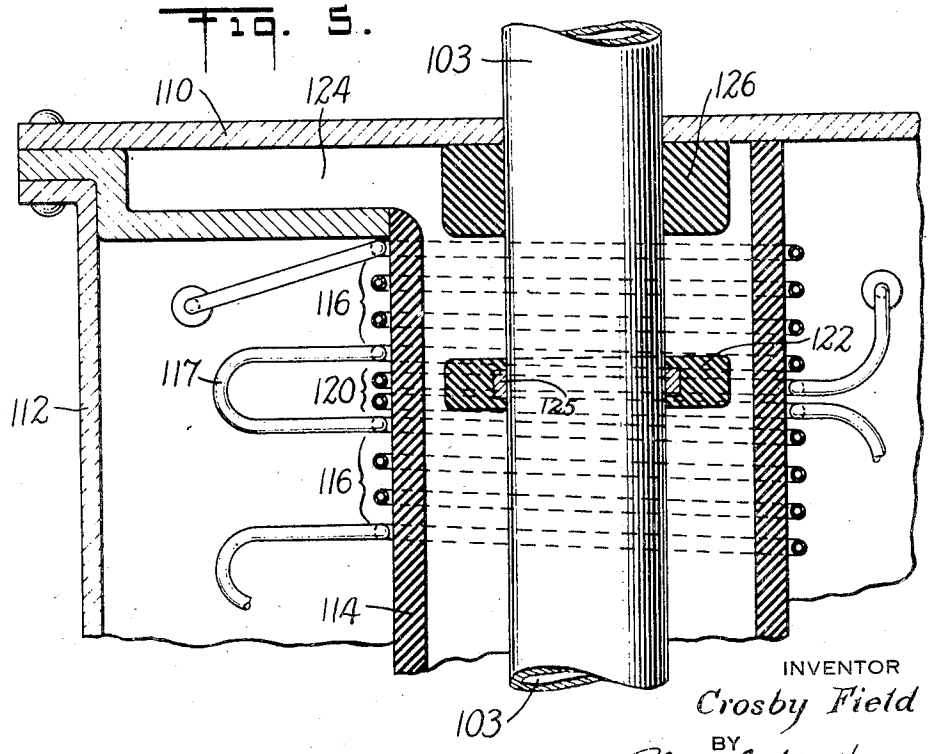

INVENTOR
Crosby Field
BY
Blair, Curtis & Hayward
ATTORNEYS

Patented Nov. 22, 1949

2,488,529

UNITED STATES PATENT OFFICE

2,488,529

METHOD AND APPARATUS FOR MAKING ICE

Crosby Field, Brooklyn, N. Y., assignor to Flakice Corporation (Delaware), Brooklyn, N. Y., a corporation of Delaware

Application June 5, 1944, Serial No. 538,768

23 Claims. (Cl. 62—106)

1

This invention relates to refrigeration and more particularly to forming relatively small units or cubes of ice.

An object of this invention is to provide an apparatus and method for making ice in the form in which the ice is to be used. A further object is to provide for the congealing of a liquid in spaced zones so that individual frozen units are formed. A further object is to provide apparatus of the above character which is simple and compact, and yet sturdy and durable in construction. A still further object is to provide apparatus of the above character which is efficient in the utilization of the refrigerating medium, both with respect to the refrigerant used, and with respect to the variation in the load upon the system. Another object is to provide for the removal of ice from the surface upon which it is formed by producing a sudden shock which severs the ice bond between the ice and the surface. These and other objects will be in part obvious and in part pointed out below.

The invention accordingly consists in the features of construction, combinations of elements, arrangements of parts and in the several steps and relation and order of each of the same to one or more of the others, all as will be illustratively described herein, and the scope of the application of which will be indicated in the following claims.

In the drawings in which are shown two of many possible embodiments of the invention:

Figure 1 is a schematic showing of one embodiment with the refrigerant circuit as well as the electrical circuit represented;

Figure 2 is a vertical section of one freezing unit of the embodiment of Figure 1;

Figure 3 is a sectional view on the line 3—3 of Figure 2;

Figure 4 is a sectional view of the freezing apparatus of Figure 1; and

Figure 5 is a fragmentary sectional view of another embodiment of the invention.

The illustrated apparatus operates to form small cylindrical bodies or "cubes" of ice. In the past such bodies of ice have been formed by freezing large blocks or sticks of ice and then cutting these by one means or another into pieces of the desired size. This is inefficient and wasteful, not only because of the loss of time and freezing capacity during the freezing operations, but also because of the loss of ice and time, and the energy consumed, during the cutting of the ice.

There have been proposals to freeze ice in the proper size for use, but in each instance difficulty

2

has been encountered, particularly in the freeing of the ice from the freezing surface. In some systems the freezing and ice-freeing operations are performed by first supplying a refrigerant medium to the refrigerant chamber for a period sufficient to form the ice, and then replacing the refrigerant medium with a hot fluid which warms the freezing surface and melts the bodies of ice free. These systems are inefficient both with respect to the utilization of the refrigerant medium and with respect to the utilization of the freezing equipment. That is, a large amount of refrigerant is used merely to recool the refrigerant chamber after the bodies of ice are melted free and this recooling effort is completely lost so far as ice production is concerned. Furthermore, all of the equipment is tied up for the melting and recooling operations, and this is a much longer period of time than it takes merely to produce ice.

By use of the present invention these and other difficulties of the prior art are avoided, and yet the advantages of producing only small units of ice are retained. Ice is formed in small bodies which are freed by producing a severe shock which acts suddenly to destroy the bond between the ice and the freezing surface. The shock is produced by suddenly heating the freezing surface; the freeing of the ice may be due to melting a thin film of the ice, or the heating may cause the freezing surface to expand and tear itself from the cold, brittle ice. The heating effect is produced electrically and is not prolonged, and it is confined to the freezing surface so that the refrigerant chamber is not heated materially. Furthermore, in the illustrative embodiments of the invention a volatile refrigerant is used and when the heating starts the refrigerant in the vicinity of the freezing surface turns to gas immediately and effectively isolates the refrigerant chamber from the remaining portions of the refrigeration system.

The heating of the tubes for the purpose of freeing the ice produces a load upon the refrigeration system. But the ice is freed one section at a time from the numerous freezing sections, or groups of freezing units, while the freezing operation continues in all of the other sections or groups. Thus the load imposed upon the refrigeration system by the successive heating of single sections is not large in comparison with the total refrigeration load of the system. Accordingly, the refrigeration system operates efficiently and without undue overall shock.

Referring particularly to Figure 1 of the drawings, which shows schematically one embodiment

of the invention, a pair of identical stainless steel freezing tubes 2 and 3 are enclosed in cylindrical casings 4, tube 3 and its casing being shown in section. Each casing 4 forms with its tube an elongated annular space within which a succession of members is so located as to form a series of refrigerating chambers 102 connected together to form, in effect, a single extended chamber to which refrigerant may be supplied.

These chamber-forming members are of two shapes, both preferably of synthetic rubber or plastic. For convenience I will designate one set of these members as the concave members, and the others the convex members. They are circular in cross-section and have circular central openings. Referring particularly to Figures 1 and 2, the concave members are indicated by the numeral 100 and the convex members by the numeral 80. These members are assembled between casing 4 and tube 3 in alternating sequence, first a concave member and then a convex member, and so on. The overall diameter of the concave members 100 is such to make these members fit closely within the casing 4, and the diameter of the central opening of the concave members is slightly greater than the over all diameter of tube 3, so that a relatively thin, annular space or passage 102 is formed between tube 3 and member 100.

The convex members 80, however, are somewhat smaller in overall diameter than the interior size of casing 4, and have a central hole which is of such size as to fit closely upon and around the exterior of tube 3. Further, means (later to be described) are provided to space the convex members slightly from their adjacent concave members to provide passages 104 between them, so that refrigerant may pass not only between the inner surface of the concave members and the tube 3, but also between the concave members and the convex members.

Thus, this elongated tubular chamber comprises a series of spaced freezing zones along the tube 3. Liquid refrigerant is supplied to this chamber (indicated by the numeral 5) at the top of casing 4 through a tube 6 and an adjustable expansion valve 8, and gaseous refrigerant is withdrawn from the chamber at the bottom of casing 4 through a pipe 10. The gaseous refrigerant is compressed by a compressor 12 driven by a motor 14, and the compressed refrigerant is condensed to a liquid again in a condenser 16. The liquid refrigerant is collected in a receiver 18 and is returned to pipe 6 and chamber 5.

As shown best in Figure 4, water to be frozen is supplied to a tank 20 beneath the freezing tubes through a valve 21 controlled by a float 23. This water is pumped from tank 20 through a pipe 22 by a pump 24 and delivered through a pipe 26 to water pan 27 from which it flows into the tops of the tubes. When flowing down through the tubes the water clings to the tube walls and is frozen in the freezing zones so that ice forms in spaced rings on the inner surface of the tubes. However, the refrigerating effect is confined to the spaced freezing zones and ice does not form in the spaces between the zones. The diameter of the ice "cubes" so frozen is, of course, determined by the diameter of the tubes, and the length of the freezing zones similarly determines the length of the frozen units.

When sufficient ice has been formed in tubes 2 and 3 and it is desired to free the ice, a heating effect is produced which heats the freezing tubes thereby freeing the bodies of ice with the result

that the bodies fall downwardly from the tubes onto a screen 28. This screen is slanted toward opening 30 in the side of tank 20 and the ice units slide through opening 30 to a storage space not shown. The flow of water down the tubes is in excess of that frozen, and the excess passes through screen 28 and returns to the body of water in the bottom of tank 20. The flow of water down the tubular freezing surfaces causes the air to leave the ice so that bodies of clear ice are formed.

The heating effect for freeing the ice is produced in this embodiment by a low-frequency, low-voltage current. This current is supplied by a current transformer and is caused to flow down one of the tubes 2, 3 (see Figure 1) and up the other tube. Accordingly, the bottom ends of the tubes 2 and 3 are connected by a copper bar 32 which is provided with suitable holes in which the lower ends of the tubes are snugly received. The upper ends of tubes 2 and 3 carry contactors 34 and 35 through which the electric current flows to and from the tops of the tubes. Bar 32 and contactors 34 and 35 are brazed to the tubes to insure the proper electrical contacts. The current flows to contactors 34 and 35 from a pair of parallel brass rails 36 and 38, which are supported at their ends by brackets 37 and 39. A sliding armature 40 is carried by the rails (see also Figure 2.) Armature 40 has two brushes 41 and 43 mounted in brush holders 45 and 47 on an insulating block 49. Brush holder 45 slides on, and is electrically connected to, the lower rail 36, and its brush 41 is adapted to move into electrical engagement with contactor 35. Similarly, brush holder 47 slides along and is electrically connected to the upper rail 38, and its brush 43 is adapted to move into engagement with contactor 34. Brushes 41 and 43 flare outwardly, as shown in Figure 1, and the contactors are shaped to correspond; thus, as armature 40 is moved to the left in Figure 1, the brushes move into firm engagement with their contactors.

The left-hand bracket 37 is insulated from rails 36 and 38 whereas the right-hand bracket 39 is connected at its lower end to rail 36 and at its upper end to rail 38. Thus, bracket 39 forms a cconductor loop or secondary winding through which the iron core 42 of a current transformer 44 extends. Transformer 44 has a primary winding 46 to which power is supplied. When the primary winding 46 is energized, a heavy current flows from the upper end of bracket 39, to rail 38, brush holder 47, brush 43, contactor 34, tube 2, bar 32, tube 3, contactor 35, brush 41, brush holder 45, and rail 36 back to the lower end of bracket 39. This current is of sufficient strength to heat the tube suddenly and thus cause the ice to be freed. As pointed out above, the freeing action results from either the sudden expansion of the tube which causes the tube to tear itself from the ice, or by the melting of the thin film of ice bonding the ice to the tube; in some cases these two effects may be combined.

As indicated above, Figure 1 is a schematic showing representing one pair of freezing tubes whereas in the actual construction there are several pairs of such tubes. The ice is harvested from first one pair of tubes and then the next, and while the ice is being harvested from a particular pair of tubes the freezing operation continues in all of the other tubes. Accordingly, means is provided to move armature 40 intermittently along rails 36 and 38 at a slow rate stopping each time the brushes 41 and 43 are in en-

gagement with a set of contactors 35 and 34. But whenever the armature moves into a position where its brushes engage a pair of contactors, a circuit is completed supplying power to the primary winding 46 of the current transformer 44. This causes a heavy current to flow through the circuit including tubes 2 and 3 in the manner outlined above. The arrangement is such that after a predetermined time which is sufficient for the ice to be harvested, e. g., ten seconds, the armature starts to move again, but before the brushes move out of engagement with contactors 34 and 35 the power circuit is disconnected.

Armature 40 is moved by an endless belt 46 to which the armature is attached (see Figure 2) by a clip 56. Endless belt 46 extends around an idler pulley 50 and a driving pulley 48 which is driven by a motor 52 through a gear reduction assembly 54. As pointed out above, armature 40 is moved along rails 36 and 38 and stops intermittently to harvest the ice in each set of tubes. At the time armature 40 reaches the left-hand ends of the rails the armature leaves the rails and is supported solely by the endless belt; the armature is carried around pulley 48 and thence around pulley 50 and back to the right-hand ends of rails 36 and 38. The tapered ends of the rails guide the armature into the space between the rails.

Power is supplied to the primary winding 46 of transformer 44 through a pair of leads 58 and 60. Lead 60 extends to one terminal of switch 62, and lead 58 is connected through a normally open switch 59, lead 61, control resistance unit 63, and lead 65, to the other terminal of switch 62. Switch 62 is closed to connect the circuit to a 60 cycle, 110 volt power source. Switch 59 is normally open, and is closed by the action of a cam element 66 carried by endless belt 46. This cam element is so positioned that it engages and closes switch 59 at the time brushes 41 and 43 are in engagement with contactors 35 and 34; and, cam element 66 moves out of engagement with switch 59 so that the switch opens before brushes 41 and 43 move away from contactors 35 and 34. Thus no current is flowing at the time the brushes move into and out of engagement with the contactors. An additional cam element 66 is provided for each pair of tubes so that switch 59 is closed each time the brushes engage a pair of contactors. Unit 63 is adjusted so that the proper amount of power is supplied to the primary winding 46; the proper adjustment is indicated by a wattmeter 74, a voltmeter 76, and an ammeter 78.

As indicated above, ice is formed in predetermined zones in tubes 2 and 3 and ice does not form in the spaces between these zones. As will be more fully explained below, the formation of ice between the freezing zones is prevented in the present embodiment by the combined action of heat insulating members 80 and heater coils 82. There is a heater coil 82 embedded in each member 80 and the coils are connected in series and thence through a pair of terminals 83 and 85, and leads 84 and 86 to leads 60 and 65. Insulating members 80 hold the refrigerant away from the pipe at the zones where ice is not to be formed. Heat sufficient only to prevent ice formation is produced by coils 82 and this heat is small because of the presence of insulating members 80. It is appreciated that the use of heating coils 82 constitutes a load on the refrigeration system but this load is negligible. Members 80 not only insulate the enclosed sections of the freezing tube 3 so that the freezing tube is not cooled materially

at these points, but these members also insulate heater coils 82 so that heat is used to best advantage.

As best shown in Figure 4, the ice-making assembly comprises five pairs of the freezing units mounted in an enclosure on the top of tank 20. This enclosure is formed by a bottom section 90, an upper section 92, and an outer wall assembly 91; stay-bolts (not shown), hold the assembly together. At the bottom, the freezing tubes extend through section 90, and at the top, the freezing tubes extend through section 92 to a level slightly above the bottom of the water pan 27 formed in the top of section 92. As best shown in Figure 2, the tops and bottom ends of casings 4 are snugly received in recesses 93 and 94, respectively, in the sections 92 and 90.

Within the freezing zones of the elongated chamber 5, the liquid refrigerant evaporates in direct heat-transferring contact with the freezing tube 3 and causes ice to form upon the inner surface of the tube. In the upper end of casing 4 and surrounding freezing tube 3 is an insulating member 98 in which is embedded one of the heaters 82, referred to above. The lower portion of member 98 is the shape of a sector of a toroid, and is spaced from the upper wall of the top member 100. The space 99 between members 98 and 100 forms a refrigerant distributing inlet so that the incoming refrigerant is evenly distributed around tube 3 as the refrigerant passes to the first evaporator space 102. Each of the spaces 104 between members 80 and 100 (and 98 and 100) is maintained by three ribs 108 (shown best in Figure 3) integral with the ends of members 100. These ribs 108 insure that the refrigerant can flow from the top to the bottom of chamber 5 in casing 104 through each space 102. The refrigerant is mainly liquid at the top of chamber 5 and evaporation takes place so that mainly gas passes from the bottom of the chamber. One of ribs 108 at each of the members 80 provides an insulated recess through which the electrical connections are made to the embedded heating element 82.

As indicated above, the pairs of tubes are heated in sequence to harvest the ice; the number of tubes and the timing may be such that when the harvesting is completed on one pair of tubes the next pair of tubes is ready for harvesting. Thus, there would be only a short interval of time between the harvesting of one pair of tubes and the harvesting of the next pair of tubes, and during this time the heat produced during the harvesting of the last pair of tubes is being absorbed by the refrigeration system. Accordingly, the refrigeration load caused by the harvesting operation is maintained substantially constant and there is no great shock to the refrigeration system.

Referring again to Figure 4, in which one tube of each of five pairs of tubes is shown, the pair of tubes at the extreme right is first harvested and then the other pairs are harvested in succession from right to left. At the time that the pair of tubes at the extreme left is harvested the armature may be stopped temporarily to permit a further ice formation before the next cycle of harvesting operations is started. By controlling this delay the freezing time is controlled with the result that the thickness of the ice formation is regulated; for example, a short freezing time will give thin rings or hollow cylinders of ice and a long freezing time will give solid cylinders or cubes of ice.

In this embodiment the current which is used to heat the freezing tubes for harvesting is of standard frequency and low voltage. Under some circumstances, direct current, or high-frequency, alternating current may be used. The use of direct current is advantageous where proper control of the current is obtainable. The use of high-frequency, alternating current is impractical under some circumstances because of the cost of maintaining a reliable source of such current.

In the embodiment of Figure 5, heat is produced in the freezing tube by induction rather than by the direct flow of current as in the embodiment of Figures 1 to 4. Accordingly, the freezing tube 103 is mounted in a metallic casing having a top wall 110 and a side wall structure 112. The freezing tube is surrounded by an evaporator tube 114, which is non-metallic and is illustratively of a plastic such as Bakelite. Surrounding tube 114 are two sets of coils, formed of hollow copper tubing, which may carry high-frequency currents of a frequency such as 26,500 cycles per second. The coils of one set are indicated at 116 and each surrounds a freezing zone and is used to heat the tube and free the ice; coils 116 are connected in series by loops 117. The coils of the other set are designated 120 and each surrounds the space between two freezing zones; coils 120 are connected in series and energized continuously with high-frequency current to supply heat to the freezing tube in the spaces between the freezing zones.

A rubber insulating ring 122 attached to the outer surface of tube 103 to hold the refrigerant away from the tube at the space between each two freezing zones. The freezing tube 103 has shrunk upon it within each of rings 122 a ring 125 of a metal having high permeability. These metal rings 125 provide a path for the lines of force of the high-frequency coils 120 and thus cut off leakage; this concentrates the heating effect of coils 120 to the space between the freezing zones. It should be noted that these metal rings 125 also provide a degree of insulation as is the case with heat transfer through laminae. The width of metal rings 125 is less than the width of the insulating rings 122 so that the rubber or plastic insulation of the latter completely encloses the former. The current flowing through coils 120 is so regulated that no more heat is produced at the tube than is necesary to prevent the formation of ice at this place in the tube. When ice is to be harvested, coils 116 are energized with the result that tube 103 is heated and the ice freed in the manner discussed above in connection with the embodiment of Figures 1 to 4. Refrigerant is supplied to the top of tube 114 through a channel 124 and this refrigerant may be of the volatile type or it may be a cold freezing medium such as cold brine. Cold water flows through the tubing forming coils 116 and 120 to cool them. At the upper end of the upper freezing zone is an insulating ring 126 of rubber or plastic.

With both of the illustrative embodiments of the invention the sudden shock for freeing the ice is produced electrically and the electric currents flow only for the period of time necessary to free the ice. The heat produced is confined to the freezing tube and the remaining portions of the evaporator chamber are not heated. As pointed out above, particularly in the embodiment of Figures 1 to 4, at the start of the ice harvesting operation the refrigerant within the thin refrigerant chamber adjacent the freezing tube turns into gas immediately, and the gas pressure tends to divert liquid refrigerant from the top of the refrigerant chamber. Thus, the heating tends to isolate the refrigerant chamber from the remainder of the refrigeration system. When the ice harvesting operation is completed the water flowing down the inside of the freezing tube immediately recools the tube; this assists in creating a cold condition of the refrigerant chamber so that liquid refrigerant immediately flows into the top of the refrigerant chamber and ice starts to form at once.

The walls of the freezing tubes should be of sufficient thickness to withstand the pressures and physical abuse inherent in the operation. However, it is desirable that these walls be thin to permit the ready passage of heat to the refrigerant during the formation of the ice, and also so that there is sufficient resistance to the flow of current to give the desired substantial and sudden rise in temperature.

As many possible embodiments may be made of the mechanical features of the above invention and as the art herein described might be varied in various parts, all without departing from the scope of the invention, it is to be understood that all matter hereinabove set forth, or shown in the accompanying drawings is to be interpreted as illustrative and not in a limiting sense.

I claim:

1. In apparatus for forming ice bodies, the combination of, a tube forming an extended vertical passageway, means to cause water to flow down said tube, refrigerating means to produce a cooling effect at spaced zones in said passageway whereby annular ice bodies are formed at spaced intervals along said tube on wall portions of the passageway, and means to produce a flow of electric current along said tube in said wall portions to create heat of sufficient magnitude to release the ice bodies.

2. In apparatus for forming ice bodies, the combination of, wall means providing a longitudinal passageway having the cross-section that is desired in the ice bodies, means to produce a cooling effect along said wall means in spaced zones with the wall portions between the zones being maintained at a temperature above freezing, and means to harvest the ice bodies formed in said zones by heating the wall means so that the ice bodies are freed from the wall means.

3. In apparatus of the character described, the combination of, a congealing tube, means surrounding a portion of said tube and defining with said tube a plurality of separate cooling spaces, means to supply a refrigerating medium to said cooling spaces, means to supply the liquid to be congealed to the wall surface of said tube whereby congealed bodies are formed upon said wall surface of said tube adjacent said cooling spaces, and means to prevent congealing of liquid upon said wall surfaces of said tube in the zones between said cooling spaces.

4. In ice-making apparatus of the character described, the combination of, a congealing tube, means surrounding a portion of said tube and defining with said tube a plurality of separate cooling spaces, means to supply an evaporative refrigerating medium to said cooling spaces, means to supply the water to be congealed to the wall surface of said tube whereby ice bodies are formed upon the wall surface of said tube adjacent said cooling spaces, and electric heating means to prevent the formation of ice within said tube in the zones between said cooling spaces.

5. In apparatus for forming ice bodies of the character described, the combination of, a plurality of parallel vertical tubes, tray means at the top of said tubes, a water sump into which water flows from the bottom of said tubes, means to pump water from said sump to said tray means, means forming a plurality of cooling zones each of which circles one of said tubes with the zones spaced along the tubes whereby ice bodies are formed in the tubes in spaced relationship, and means to heat the tubes whereby the ice is freed and falls from the tubes by gravity.

6. Apparatus as described in claim 5 which includes, means to divert the ice falling from said tubes whereby it does not fall into water in said sump.

7. In apparatus for forming ice bodies, the combination of, a metal freezing tube, an evaporator assembly surrounding a portion of said tube and forming with said tube a plurality of individual cooling zones spaced along said tube, means to supply liquid to be congealed to said tube whereby ice bodies are formed in said cooling zones, means to prevent the formation of ice in said tube between said cooling zones, and means to heat said tube within said zones whereby the ice bodies are freed.

8. In congealing apparatus of the character described, the combination of, a pair of vertical tubes, an evaporator assembly including means defining a plurality of evaporator chambers surrounding each of said tubes whereby refrigerant is evaporated in contact with each of said tubes at spaced zones, means mounting the ends of said tubes and said evaporator assembly comprising two hollow members positioned respectively at the top and bottom of said tubes and having holes therethrough through which the ends of said tubes extend, and means to direct liquid to be congealed into the top of said tubes and to receive the liquid flowing from the bottom thereof and return the liquid to the top of said tubes.

9. In apparatus for forming ice bodies, the combination of, a plurality of freezing tubes positioned in parallel relationship and each providing a vertical longitudinal passageway having the cross-section that is desired in the ice bodies, a water circulating system including a pump for delivering water to the upper ends of said passageways and means for causing the water to flow down the inner surfaces of said freezing tubes, said water circulating system including a sump into which water which is not frozen passes from the bottom ends of said freezing tubes, a refrigeration system to produce a cooling effect along each of said tubes in spaced zones with the tube portions between the zones being at a temperature above freezing, said refrigeration system producing the cooling effect by evaporating refrigerant in heat-exchange relationship with the tubes at said spaced zones, and means to harvest the ice bodies formed in said zones by heating the freezing tubes so that the ice bodies are freed from the freezing tubes.

10. In congealing apparatus of the character described, the combination of, a pair of vertical metal tubes, an evaporator assembly including means defining a plurality of evaporator chambers surrounding each of said tubes whereby refrigerant is evaporated in contact with each of said tubes at spaced zones, means mounting the ends of said tubes and said evaporator assembly comprising two hollow members positioned respectively at the top and bottom of said tubes and having holes therethrough through which the ends of said tubes extend, means to direct liquid to be congealed into the top of said tubes and to receive the liquid flowing from the bottom thereof and return the liquid to the top of said tubes, means providing an electrical connection between the lower ends of said tubes whereby an electric circuit is formed of said tubes, and means to supply a heavy electric current to said circuit whereby congealed liquid is freed.

11. Apparatus as described in claim 10 which includes a plurality of pairs of vertical tube members, and wherein the means to provide the electric current includes a pair of movable contactors, and means to move said contactors successively from one pair of tubes to another.

12. In apparatus of the character described, a freezing tube assembly comprising, a metallic tube within which ice is formed, an outer sleeve surrounding said tube in spaced relationship whereby an annular space is formed, a plurality of insulating girdles surrounding said tube, refrigerant-directing means within said space and forming with said tube and said girdles an annular thin evaporator space which is cylindrical in the zones between said girdles, and means providing a refrigerant inlet and a refrigerant outlet for said space.

13. Apparatus as described in claim 12 wherein said girdles and said refrigerant-directing means are formed of heat insulating material and wherein said girdles are in the form of toroids.

14. In apparatus for forming ice bodies, the combination of, a vertical metallic tube open at its upper and lower ends and providing a passageway through which the liquid to be frozen may pass and in which the ice bodies are formed, means forming a plurality of spaced annular evaporator chambers about said tube, means positioned between each chamber and the next adjacent chamber to retard the formation of ice in the enclosed portion of the tube, and means adapted to free the ice which is formed in the zones enclosed by the evaporator chambers, whereby the individual pieces of ice are removed by gravity.

15. In apparatus for forming ice cubes or the like, the combination of, a vertical metallic tube in which ice is formed, refrigerating means surrounding said tube and forming with the outer surface of said tube a plurality of spaced chambers to which a refrigerating medium is supplied to produce a cooling effect and form ice within the tube, means to supply a refrigerating medium to said chambers, and heating means to produce a heating effect in said tube intermittently thereby to free the ice.

16. In apparatus for forming ice cubes or the like, the combination of, wall means forming a vertical elongated opening of uniform cross-section and having therein a plurality of spaced freezing zones in each of which an ice cube or the like is formed, means forming a refrigerant chamber surrounding each of said zones, means to supply a refrigerant medium to said chambers whereby ice is formed in each of said zones, and means to harvest the ice by interfering with the refrigerating process and causing the wall means about each zone to be heated.

17. In apparatus for forming ice bodies, the combination of, a freezing tube having a cross-section which is substantially equal to that desired in the ice bodies, means forming a plurality of spaced freezing zones along said tube, heating means to produce heat at the termini of the freezing zones, means to supply water to the freezing

zones whereby individual ice bodies are formed, and means to produce a sudden heating of the tube to free the ice bodies.

18. In apparatus for forming ice bodies, the combination of, a freezing tube having an inside diameter which is substantially equal to the desired cross-section of the ice bodies to be formed and having the characteristic that a sudden heating of the tube will cause expansion of the tube away from the ice bodies, means forming a plurality of spaced annular evaporator chambers about said tube, means positioned between each chamber and the next adjacent chamber to retard the formation of ice in the enclosed portion of the tube, and means to produce a sudden heating of the tube whereby the ice bodies are freed without substantially heating the ice bodies.

19. In apparatus for forming congealed bodies, the combination of, a tube forming a congealing passageway having a cross-section which is substantially equal to that desired in the bodies, means forming a plurality of spaced congealing zones along said tube, means to limit the axial extent of the congealed bodies to substantially said congealing zones, means to supply liquid to the congealing zones whereby individual congealed bodies are formed, and means to produce a substantial flow of electrical current through the tube wall thereby to produce a sudden heating of the tube to free the congealed bodies.

20. In apparatus for forming congealed bodies, the combination of, a metal tube having an internal cross-section which is substantially that desired in the bodies, means to produce a refrigerating effect within a zone in said tube, a coil formed of a hollow conductor surrounding said tube at said zone, and means constituting a supply of high-frequency alternating current connected to said coil whereby current is induced in the tube wall to free the congealed bodies.

21. Apparatus as described in claim 20 which includes, a metal band of high permeability surrounding said tube at one edge of said zone, a ring of heat-insulating material covering said metal band, and a second coil surrounding said metal band and adapted to induce current therein with the result that a heating effect is produced.

22. Apparatus as described in claim 21 wherein said means to produce a refrigerating effect includes an evaporator formed by a non-metallic tube which surrounds and is spaced from said metal tube, and a metal casing enclosing and providing a mounting structure for said tubes.

23. In apparatus for forming congealed bodies, the combination of, a metal tube having an internal cross-section which is substantially that desired in the bodies, means forming a plurality of spaced congealing zones along said tube, a hollow-conductor coil assembly comprising a plurality of coils corresponding in number to the number of said zones and respectively surrounding said zones, and means constituting a source of high-frequency alternating current connected to said coil assembly whereby current is induced in the tube wall to free the congealed bodies.

CROSBY FIELD.

REFERENCES CITED

The following references are of record in the file of this patent:

UNITED STATES PATENTS

Number	Name	Date
1,936,575	Barrett et al.	Nov. 20, 1933
2,006,623	Barrett et al.	July 2, 1935
2,149,000	Udell	Feb. 28, 1939
2,200,424	Kubaugh	May 14, 1940