AUSTRALIA

Patents Act 1990

676045

# NOTICE OF ENTITLEMENT

I/~~We~~, John Chun Kuen SHAM

~~authorised by~~ .....

of Room 1508, Block C, 19 Broadwood Road , Hong Kong

.....

the applicant and nominated person in respect of an application for a patent for an invention entitled:

Portable steam vacuum cleaner with squeegee

filed under Australian Application No. 65738/94 state the following:

**PART 1** - *Must be completed for all applications.*

The person(~~s~~) nominated for the grant of the patent

☒ is (~~are~~) the actual inventor(s)

~~or~~

~~☐ has, for the following reasons, gained entitlement from the actual inventor(s)~~

.....

.....

.....

**PART 2** - *Must be completed if the application is a Convention application.*

The person(s) nominated for the grant of the patent is (are):

☐ the applicant(s) of the basic application(s) listed on the patent request form

or

☐ entitled to rely on the basic application(s) listed on the patent request form by reason of the following:

.....

.....

.....

**PART 3** - *Must be completed if the application was made under the PCT and claims priority.*

The person(~~s~~) nominated for the grant of the patent is (~~are~~):

☒ the applicant(s) of the application(s) listed in the declaration under Article 8 of the PCT

~~or~~

~~☐ entitled to rely on the application(s) listed in the declaration under Article 8 of the PCT by reason of the following:~~

.....

.....

.....

Dated this 20th day of Oct 1995

Signature .....

Signatory's Name John Chun Kuen Sham



F.B. RICE & CO. PATENT ATTORNEYS

AU9465738

(12) PATENT ABRIDGMENT (11) Document No. AU-B-65738/94
(19) AUSTRALIAN PATENT OFFICE (10) Acceptance No. 676045

(54) Title
PORTABLE STEAM VACUUM CLEANER WITH SQUEEGEE

International Patent Classification(s)
(51)[5] A47L 001/08 A47L 005/24 A47L 007/00
(51)[6] A47L 001/05

(21) Application No. : 65738/94 (22) Application Date : 22.04.94

(87) PCT Publication Number : WO94/24920

(30) Priority Data

| (31) Number | (32) Date | (33) Country |
|---|---|---|
| 052147 | 23.04.93 | US UNITED STATES OF AMERICA |

(43) Publication Date : 21.11.94

(44) Publication Date of Accepted Application : 27.02.97

(71) Applicant(s)
JOHN CHUN KUEN SHAM

(72) Inventor(s)
JOHN CHUN KUEN SHAM

(74) Attorney or Agent
F B RICE & CO , 28A Montague Street, BALMAIN NSW 2041

(56) Prior Art Documents
FR 2665650
EP 586762
FR 2236469

(57) Claim

1. A portable vacuum cleaner for cleaning flat surfaces comprising:

a) a housing (12,212,312) having a handle portion (14,214,314) and a nozzle portion (18,218);

b) motor driven collection means within the housing (12,212,312) for drawing liquid from the surface into said nozzle portion (18,218) and

c) a squeegee assembly (400) is mounted on said housing (12,212,312) adjacent to the nozzle portion (18,218) for wiping the flat surface characterised in that

d) means for scrubbing the flat surface is mounted on the housing (12,212,312) adjacent to the nozzle portion (18,218).

OPI DATE 21/11/94 APPLN. ID 65738/94
AOJP DATE 05/01/95 PCT NUMBER PCT/GB94/00864

AU9465738

I

(51) International Patent Classification 5 :
A47L 1/08, 5/24, 7/00

A1

(11) International Publication Number: WO 94/24920

(43) International Publication Date: 10 November 1994 (10.11.94)

(21) International Application Number: PCT/GB94/00864

(22) International Filing Date: 22 April 1994 (22.04.94)

(30) Priority Data:
08/052,147 23 April 1993 (23.04.93) US

(71)(72) Applicant and Inventor: SHAM, John, Chun, Kuen [GB/GB]; Room 1508, Block C, 19 Broadwood Road (HK).

(74) Agents: WOODWARD, John, Calvin et al.; Venner, Shipley & Co., 20 Little Britain, London EC1A 7DH (GB).

(81) Designated States: AU, BB, BG, BR, CA, CN, CZ, FI, HU, JP, KP, KR, KZ, LK, LV, MG, MN, MW, NO, NZ, PL, RO, RU, SD, SK, UA, UZ, VN, European patent (AT, BE, CH, DE, DK, ES, FR, GB, GR, IE, IT, LU, MC, NL, PT, SE), OAPI patent (BF, BJ, CF, CG, CI, CM, GA, GN, ML, MR, NE, SN, TD, TG).

Published
*With international search report.*

676045

(54) Title: PORTABLE STEAM VACUUM CLEANER WITH SQUEEGEE

(57) Abstract

A vacuum cleaning apparatus (10) is provided which includes a housing (12) having a handle portion (14) and a nozzle portion (18). A reservoir (44) is defined in the housing for retaining cleaning solution or water, and a heating unit (50) is associated with the reservoir for heating the liquid so as to generate steam for delivery to a flat surface such as a window to be cleaned. A squeegee assembly (400) is mounted to the housing adjacent the nozzle portion for wiping the window after liquid has been deposited thereon. A motor driven fan assembly (26) is disposed within the housing in communication with the nozzle portion for drawing excess liquid and debris into the nozzle portion. The nozzle portion defines structure for separating and containing the liquid which is drawn into the apparatus.

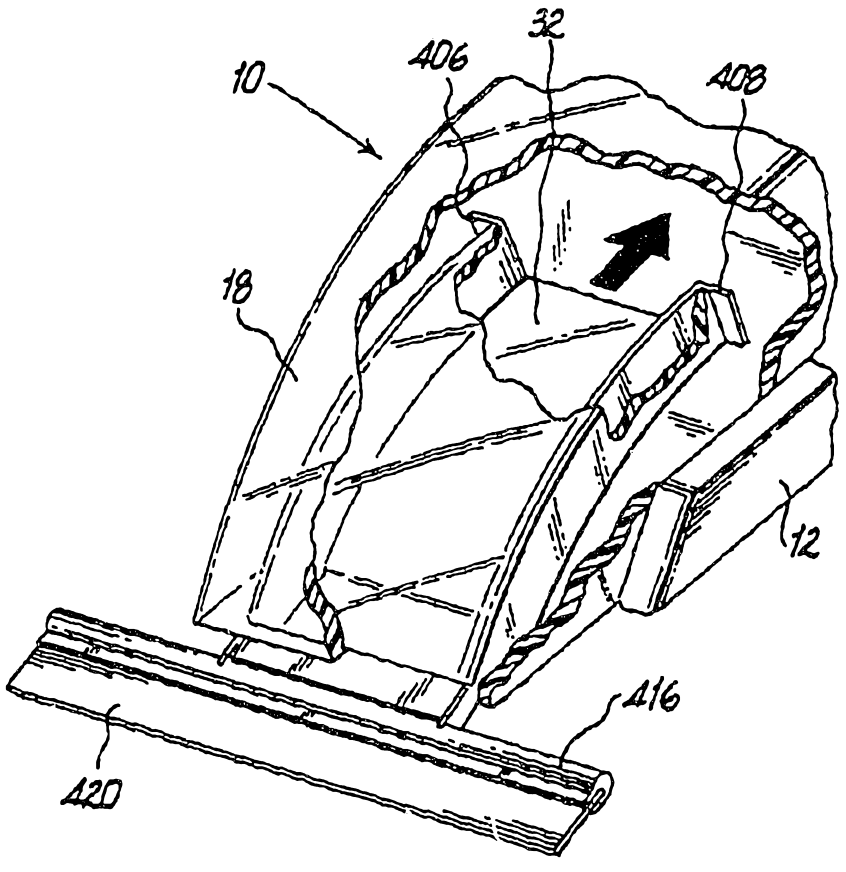

# PORTABLE STEAM VACUUM CLEANER WITH SQUEEGEE

This invention relates to portable vacuum cleaners, and more particularly to a portable vacuum cleaner adapted to generate steam to clean flat surfaces such as windows.

Portable vacuum cleaners for cleaning solid or liquid materials are well known in the art and are often referred to-as "wet/dry" vacuum cleaners. Conventional wet/dry vacuum cleaners are disclosed for example, in U.S. Patent No. 4,821,366 to Levine, U.S. Patent No. 4,924,548 to Touya et al., and U.S. Patent No. 5,005,252 to Steiner et al. These devices typically include a motor driven fan enclosed within a housing for producing a vacuum to draw liquid and debris into a collection nozzle. However, conventional wet/dry vacuums are unsuited for cleaning stained fabrics, upholstery, or carpets.

Improvements have been made in wet/dry vacuum cleaners in an effort to increase their stain cleaning effectiveness. For example, U.S. Patent No. 4,788,738 to Mortson et al. discloses a portable vacuum cleaner having an internal cleaning fluid supply system disposed in a removable discharge head which includes a chamber for retaining the

cleaning fluid, a spray nozzle for discharging the cleaning fluid to the surface to be cleaned, and a vacuum intake head for drawing excess fluid and debris into the vacuum. A vacuum blower unit is provided in communication with the discharge head for creating suction to draw the excess cleaning fluid from the surface and for pumping cleaning fluid from the spray nozzle. A similar vacuum cleaner is described in U.S. Patent No. 4,930,178 to Monson et al which incorporates a filter element for separating debris from the cleaning fluid which enables the cleaning fluid to be recycled for subsequent use. Often, however, it may be undesirable to-apply cleaning fluids directly to fabric, upholstery, or carpets, because fading, deterioration or other damage may result.

It is desirable therefore, to provide a portable vacuum cleaner which is capable of generating steam for delivery to an area to be cleaned, which overcomes the disadvantages of the prior art by providing for both steam cleaning and normal vacuuming.

Furthermore, it is often desirable to utilize a wet dry vacuum to collect liquids such as spills or to collect liquids on flat surfaces such as floors, windows, tables, etc. A problem associated with prior art devices is the "pushing" of the liquid as the vacuum is advanced across the

spill, requiring an excessive amount of strokes to pick up the liquid.

A portable steam cleaning device which is adapted for cleaning windows is described in U.S. Patent No. 2,832,086 to Wells. This device includes a housing defining a steam generating chamber, a nozzle assembly for ejecting steam to a window surface to be cleaned, and a squeegee blade for wiping the window clean after steam has been applied thereto. However, this device does not provide a mechanism for removing and collecting liquid from the window after it has been wiped by the squeegee, and instead the liquid tends to collect on the window sill or floor and must be manually removed.

It is desirable therefore, to provide a vacuum cleaning device which is capable of generating steam for delivery to a flat surface such as a window, floor or table to be cleaned and which is capable of subsequently directing and collecting the liquid from the surface after it has been wiped clean.

The portable steam vacuum cleaner of the subject invention comprises a housing having a handle portion and a nozzle portion. A reservoir is provided in the housing for retaining water or a cleaning solution such as, for example,

soapy water, and means are associated with the reservoir for heating the liquid so as to generate steam for delivery to an area to be cleaned.

In one embodiment of the invention, means are provided for pumping the liquid from the reservoir to the heating means. Alternatively, another embodiment of the invention provides conduit means for communicating the reservoir with the heating means and associated valve means for selectively transferring liquid from the reservoir to the heating means via the conduit means. Preferably, the heating means comprises a compact heating unit having a body portion which defines an entry port for receiving liquid from chambers in communication with the reservoir, a plurality of cascading steam generating the entry port for gradually heating the liquid flowing therethrough, and a plurality of exit ports in communication with one of the steam generating chambers for ejecting pressurized steam from the heating unit to an area to be cleaned.

A motor driven fan assembly is disposed within the housing of the vacuum cleaner and is in communication with the nozzle portion thereof for drawing excess liquid and debris into the nozzle portion. In addition, means are associated with the nozzle portion of the vacuum for containing the debris and excess liquid which is drawn into the nozzle

portion by the motor driven fan assembly. Preferably, structure is defined within the nozzle portion for separating liquid from the air flow drawn into the vacuum.

In another embodiment of the subject invention, the portable steam vacuum cleaner is particularly adapted to clean flat surfaces such as windows and includes a squeegee assembly for wiping a window after steam has been delivered thereto and directing the condensed liquid towards the nozzle portion of the vacuum cleaner for collection. The squeegee assembly is preferably removably mounted to the housing of the vacuum cleaner adjacent the nozzle portion thereof and includes a replaceable squeegee blade. In operation, steam is generated within the housing, and is delivered to the surface to be cleaned, such as a window. The window is then wiped with the squeegee blade, and the excess liquid is drawn into the nozzle portion of the housing where it is subsequently contained. The device may also be utilized to contain and direct large spills to the vacuum port by guiding the liquid with the squeegee blade as the vacuum collects the liquid.

Further features of the invention, its nature, and various advantages will become more apparent to one skilled in the art to which the subject invention appertains from the following detailed description of the invention taken in

conjunction with the accompanying drawings.

Preferred embodiments of the subject invention will be described hereinbelow with reference to the drawings wherein:

Fig. 1 is a perspective view of a portable steam vacuum cleaner in accordance with a preferred embodiment of the subject invention;

Fig. 2 is a side cross-sectional view taken along line 2-2 of Fig. 1;

Fig. 3 is a bottom plan view of the portable steam vacuum cleaner of Fig. 1;

Fig. 4 is a top plan view of the portable steam vacuum cleaner of Fig. 1;

Fig. 5 is a perspective view of the heating unit for generating steam within the portable vacuum cleaner of Fig. 1;

Fig. 6 is a bottom plan view of the heating unit of Fig. 5;

Fig. 7 is a top plan view of the heating unit of Fig. 5;

Fig. 8 is a side elevational view of the heating unit of Fig. 5;

Fig. 9 is a front elevational view of the heating unit of Fig. 5;

Fig. 10 is a perspective view of another embodiment of the portable steam vacuum cleaner in accordance with the subject invention;

Fig. 11 is a side cross-sectional view taken along line 11-11 of Fig. 10;

Fig. 12 is a perspective view of yet another embodiment of the portable steam vacuum cleaner in accordance with the subject invention;

Fig. 13 is a side cross-sectional view taken along line 13-13 of Fig. 12;

Fig. 14 is a cross-sectional view of an alternate embodiment of the portable steam vacuum cleaner of Fig. 13;

Fig. 15 is an exploded perspective view of a squeegee assembly in accordance with a preferred embodiment of the subject invention;

Fig. 16 is a perspective view in partial cross-section of the vacuum cleaning apparatus of Fig. 1 in conjunction with the squeegee assembly of Fig. 15;

Fig. 17 is a side elevational view of the vacuum cleaning apparatus of Fig. 12 in conjunction with the squeegee assembly of Fig. 15; and

Fig. 18 is a perspective view of the vacuum cleaning apparatus of Fig. 17 during a cleaning operation.

Referring now in detail to the drawings in which like reference numerals identify similar or identical elements, a preferred embodiment of the portable steam vacuum cleaner of the subject invention is illustrated in Fig. 1, and is designated generally by reference numeral 10. Vacuum cleaner 10 basically comprises a housing 12 which includes a handle portion 14 defining a handle grip 16, and a nozzle portion 18 preferably detachably mounted adjacent housing 12. Nozzle portion 18 may be released from housing 12 by movement of a clamp member 20 which may be manipulated by a user for gaining access to the interior of the vacuum cleaner 10.

Referring to Fig. 2, a motor 22 is enclosed within housing 12 for driving a fan 24 mounted for rotation relative to

motor 22. Rotation of fan 24 creates suction for drawing debris and liquids into the nozzle portion 18 of vacuum cleaner 10. A sealing member 26 is disposed between fan 24 and motor 22 for preventing liquid from contacting the motor 22 during wet vacuuming. In addition, a liquid separator 28 is defined in nozzle portion 18 which includes structure for preventing liquid drawn into nozzle portion 18 during wet vacuuming from entering, the cavity 30 in which the motor 22 and fan 24 are located, while prohibiting debris from contacting fan 24 during dry vacuuming. In particular, water drawn into an uptake port 32 of nozzle portion 18 will be directed towards a diverting wall 34 of arcuate configuration which diverts the liquid into a containing area 36 formed in nozzle portion 18, while permitting air to be directed into a filter chamber 38 in which a filter element 40 is disposed for removing debris from the air flow. Air, drawn through filter element 40, is subsequently exhausted through a plurality of vents 42 which are formed in the lateral walls of housing 12 (see Fig. 1).

A reservoir chamber 44 is formed in the nozzle portion 18 of vacuum cleaner 10 for retaining water or a cleaning solution. Reservoir chamber 44 may be filled with the liquid in a conventional manner such as through an aperture 46 provided in clamp structure 20. A conduit 48 extends through a valve 52 from reservoir chamber 44 to a heating unit 50

which is provided for generating steam for delivery to an area to be cleaned. Conduit 48 permits gravitational flow of liquid from the reservoir 44 to the heating unit 50. Control valve 52 is associated with conduit 48 for selectively controlling the flow of liquid from the reservoir 44 to the heating unit 50.

Turning to Figs. 5-9, the heating unit 50 comprises a body portion 52 of substantially rectangular configuration having a cover panel 54 mountable to body portion 52 at a plurality of standoff locations 56 disposed in spaced relation about the periphery of body portion 52. Preferably, heating unit 50 is constructed of cast aluminum or a like material. An entrance port 58 extends through a side wall 60 of body portion 52 through which liquid from reservoir chamber 44 flows via conduit 48. Entrance port 58 communicates with a plurality of cascading steam generating chambers defined in body portion 52 including a primary steam generating chamber 62 of a generally inverted shaped configuration. Opposed lateral dams 64 and 66 are formed at the head of primary steam generating chamber 62 for limiting the flow of heated liquid from the primary steam generating chamber 62 to a pair of secondary lateral steam generating chambers 68 and 70 of generally J-shaped configuration. Secondary dams 72 and 74 are formed at the trailing ends of lateral steam generating-chambers 68 and 70 respectively, for limiting the

flow of liquid into a tertiary steam generating chamber 76. A tertiary dam 78 separates the tertiary steam generating chamber 76 from a steam ejection chamber 80 which has a plurality of exit ports 82 defined therein through which steam generated by heating unit 50 is delivered to an area to be cleaned. A heating element such as cal-rod heating tube 84 is provided and is preferably cast integral with body portion 52 for transferring heat to the cascading steam generating chambers. Cal-rod heating tube 84 includes terminals 86 and 88 which are in electrical connection with a power supply source of alternating current from power cord 90.

A bimetallic thermostat 92 is mountable within an annular cavity 94 provided in the bottom surface 96 of the body portion 52 of the heating unit 50 by a pair of opposed mounting flanges 98 and 100 (see Fig. 6). The thermostat automatically controls the operation of heating unit 50. Referring to Fig. 2, a scrubbing brush 102 is detachably mounted to the housing 12 of vacuum cleaner 10 adjacent exit ports 82 of heating unit 50 for assisting cleaning operations.

In operation, the portable steam vacuum cleaner 10 of the subject invention may be prepared for use by connecting the unit to an electrical outlet through power cord 90. After

approximately one minute, the cal-rod heating tube 84 will have transferred sufficient heat to the body portion 52 of heating unit 50 so as to generate steam once liquid is introduced. Thus, at a desired time, the user may depress control valve 52 to cause cleaning solution or water to gravitate from the reservoir 44 into the primary steam generating chamber 62 of heating unit 50 via conduit 48. Upon entering the primary steam generating chamber 62, the liquid will begin to increase in temperature and pressure whereby heated liquid will transfer into the secondary lateral steam generating chambers 68 and 70 by traversing lateral dams 64 and 66. The temperature and pressure of the liquid is further increased in steam generating chambers 68 and 70 until such time as it flows into the tertiary steam generating chamber 76 by passing over secondary dams 72 and 74. Once introduced into the tertiary chamber 76 of heating unit 50, the temperature of the liquid is sufficiently increased to generate steam which traverses tertiary dam 78 and enters into the ejection chamber 80 where it is ejected under pressure through the ejection ports 82 to the area to be cleaned. As steam is ejected from the heating unit 50, the user may manipulate the device to employ scrub brush 102 which will assist in the cleaning task.

Once the stain has been removed and the area cleaned, the user may depress a toggle switch 104 located adjacent handle

16 which activates the motor driven fan thereby creating a vacuum for drawing debris and the excess liquid created by the condensed steam into the uptake port 32 of nozzle portion 18. Liquid drawn into uptake portion 32 is advantageously directed toward the diverting wall 34 of separator structure 28 and into the liquid containing area 36, while air flow is directed through filter chamber 38, against filter element 40, and subsequently through the exhaust vents 42 formed in the wall of housing 12.

Turning to Figs. 10 and 11, another embodiment of the portable steam vacuum cleaner in accordance with the subject invention is illustrated and designated generally by reference numeral 200. Vacuum cleaner 200 comprises a housing 212 having a handle portion 214 defining a handle grip 216, and a nozzle portion 218. A motor 222 and fan 224 are enclosed within housing 212 for creating a vacuum to draw debris and liquid into the nozzle portion 218 through an uptake port 232. A reservoir 244 is defined in the handle portion 214 of vacuum cleaner 200 which may be filled with water or cleaning solution through an aperture 215 extending through the wail thereof.

A pump 260 is provided in vacuum cleaner 200 operable by a toggle switch 262 for pumping liquid from reservoir 244 to a heating unit 250. A delivery tube 264 extends from the

reservoir 244 to pump 260, and an outlet tube 266 extends from pump 260 through housing 212 to an entrance port 258. A relief valve 268 may be provided for returning liquid to reservoir 244 from heating unit 250 via a tubular conduit 270 in the event of over pressurisation. Valve 268 is provided in the cover panel 254 of heating unit 250. An external relief valve 272 is associated with tubular conduit 270 for releasing pressure outside the vacuum 200.

In operation, vacuum cleaner 200 is prepared for use by heating the unit 250 for a sufficient period of time, and thereupon depressing the toggle switch 262 so that pump 260 delivers liquid to heating unit 250 where it is sufficiently heated to generate pressurized steam for delivery to an area to be cleaned. Thereafter, the motor driven fan 224 is activated by depressing switch 290 to draw excess liquid and debris into the nozzle portion 218 of vacuum cleaner 200.

Referring to Figs. 12 and 13, yet another embodiment of the portable steam vacuum cleaner of the subject invention is illustrated and is designated generally by reference numeral 300. Vacuum cleaner 300 is substantially similar to vacuum cleaner 200 in that it comprises a pump 360 operable by a toggle switch 364 for transferring liquid from a reservoir 344 defined in a handle portion 314 to a heating unit 350 via a tubular conduit 370 extending through the housing

portion 312 thereof. Vacuum cleaner 300 differs however, in that the heating unit 350 is enclosed within a chamber 380 which is pivotably mounted with respect to the housing 312 thereof by a pivot pin 382. By mounting the heating unit 350 in this manner, the range of operability of vacuum cleaner 300 is substantially increased.

Referring to Fig. 14, an alternate embodiment of vacuum cleaner 300 is illustrated wherein the reservoir 344 is positioned adjacent heating unit 350 enclosed within chamber 380 and adapted to be filled through an aperture 345 associated therewith. Arranged in this manner, a pump is not required for transferring the liquid from the reservoir to the heating unit. Instead, a conduit 348 extends from the reservoir 344 to heating unit 350 and includes a manually operated control valve 352 for selectively controlling the flow of liquid to heating unit 350.

In use, cleaning solution or water is delivered from reservoir 344 to the heating unit 350 by depressing the control valve 352 to allow liquid to gravitate into heating unit 350 where it is generated into pressurised steam for delivery to an area to be cleaned.

Turning now to Fig. 15, there is illustrated a squeegee assembly designated generally by reference numeral 400 and

configured to be mounted adjacent the nozzle portion of vacuum cleaner 10 which is described hereinabove and illustrated in Figs. 1-4.

More particularly, as best seen in Fig. 16, squeegee assembly 400 is adapted to detachably mount within uptake port 32 of the nozzle portion 18 of vacuum cleaner 10. Squeegee assembly 400 comprises a pair of mounting brackets 402 and 404 each having an outwardly extending rear flange 406 and 408, respectively, and a respective forward engaging fork 410 and 412. The rear flanges 406 and 408 are configured to engage the side walls of uptake port 32 at the trailing end thereof. A bridge member 414 rigidly connects the forward portions of brackets 402 and 404 and permits the relative inward flexure of the rear portion thereof to facilitate the unobstructed insertion of the brackets 402 and 404 into uptake port 32 for mounting the squeegee assembly 400.

Squeegee assembly 400 further comprises a blade retention member 416 dimensional and configured to be received within the forward engaging forks 410 and 412 of mounting brackets 402 and 404. Retention member 416 includes an elongated engagement slot 418 for releasably retaining a replaceable squeegee blade 420. The squeegee blade 420 is preferably formed from a strip of material, such as, for example,

rubber or a similar flexible material.

Referring to Figs. 17 and 18, an alternative embodiment of the squeegee assembly of the subject invention is illustrated in conjunction with vacuum cleaner 300 which is described hereinabove and illustrated in Figs. 12-14. In this embodiment of the window cleaning apparatus, the blade retention member 416 is mounted adjacent the scrubbing brush provided on chamber 380. Member 416 may be detachably mounted to vacuum cleaner 300, or alternatively, may be integrally constructed with vacuum cleaner 300. In operation, steam generated by the heating unit 350 disposed within chamber 380 is delivered to a surface to be cleaned such as window 425 as described in detail hereinabove with respect to vacuum cleaner 300. Shortly thereafter, utilizing squeegee blade 420, the operator wipes the steamed window 425 in a continuous downward stroke. As liquid is wiped from the window 425 by squeegee blade 420, it is drawn into the uptake port 332 of nozzle portion 318 and transferred into the liquid containing area formed therein.

To the extent not already indicated, it also will be understood by those of ordinary skill in the art to which the subject invention appertains that any one of the various specific embodiments herein described and illustrated may be further modified to incorporate features shown in other of

the specific embodiments. For example, the vacuum cleaner may be utilized to steam clean large surfaces by directing the deposited liquid towards the vacuum uptake port, or to vacuum large spills by gathering the spill with the squeegee blade while collecting the spill with the vacuum.

Although the subject invention has been shown and described with respect to a preferred embodiment, it will be understood by those skilled in the art that various modifications and changes may be made therein without departing from the spirit and scope of the invention as defined by the appended claims.

CLAIMS

1. A portable vacuum cleaner for cleaning flat surfaces comprising:

a) a housing (12,212,312) having a handle portion (14,214,314) and a nozzle portion (18,218);

b) motor driven collection means within the housing (12,212,312) for drawing liquid from the surface into said nozzle portion (18,218) and

c) a squeegee assembly (400) is mounted on said housing (12,212,312) adjacent to the nozzle portion (18,218) for wiping the flat surface **characterised in that**

d) means for scrubbing the flat surface is mounted on the housing (12,212,312) adjacent to the nozzle portion (18,218).

2. A portable vacuum cleaner as claimed in claim 1 characterised by a reservoir (44,244,344) in said housing (12,212,312) for retaining clean liquid for delivery to the flat surface.

3. A portable vacuum cleaner as claimed in claim 2 characterised by means for heating (50,250,350) the clean liquid so as to generate steam for delivery to the flat surface.

4. A portable vacuum cleaner as claimed in claim 3 characterised by means for transferring the clean liquid from said reservoir (44,244,344) to said heating means

AUSTRALIAN PATENT OFFICE

AMENDED SHEET

(50,250,350).

5. A portable vacuum cleaner as claimed in any preceding claim characterised in that the motor (22,222) driven collection means comprises a fan (24,224) assembly communicating with said nozzle portion (18,218).

6. A portable vacuum cleaner as claimed in claim 5 characterised in that the collection means further comprises means for containing the liquid drawn from the flat surface.

7. A portable vacuum cleaner as claimed in any preceding claim characterised in that the squeegee assembly (400) is removably mounted adjacent said nozzle portion (18,218).

8. A portable vacuum cleaner as claimed in claim 7 characterised in that the squeegee assembly (400) includes a replaceable squeegee blade (420) formed of a flexible material.

9. A portable vacuum cleaner for cleaning flat surfaces as claimed in any of claims 2-8 characterised by means for delivering the clean liquid to the flat surface to be cleaned.

10. A portable vacuum cleaner as claimed in any of

AUSTRALIAN PATENT OFFICE

claims 3-9 characterised by valve means for selectively transferring clean liquid from the reservoir (44,244,344) to the heating means (50,250,350).

11. A portable vacuum cleaner as claimed in claim 8 characterised in that the squeegee assembly (400) is detachably mounted adjacent said nozzle portion (18,218) and the replaceable squeegee blade (420) is formed from a strip of rubber.

12. A portable vacuum cleaner as claimed in any of claims 3-11 characterised in that the heating means (50,250,350) comprises an enclosure defining an entry port (58,258) for receiving clean liquid from said reservoir (44,244,344), a plurality of cascading steam generating chambers in communication with said entry port (58,258) and at least one exit port (82) in communication with at least one of said steam generating chambers for releasing steam from said enclosure.

13. A portable vacuum cleaner as claimed in claim 12 characterised in that the heating means (50,250,350) further comprises a heating coil (84) in association with the enclosure for transferring heat to the plurality of steam generating chambers, the operation of the heating coil (84 being controlled by a thermostat (92).

AUSTRALIAN PATENT OFFICE ML

AMENDED SHEET

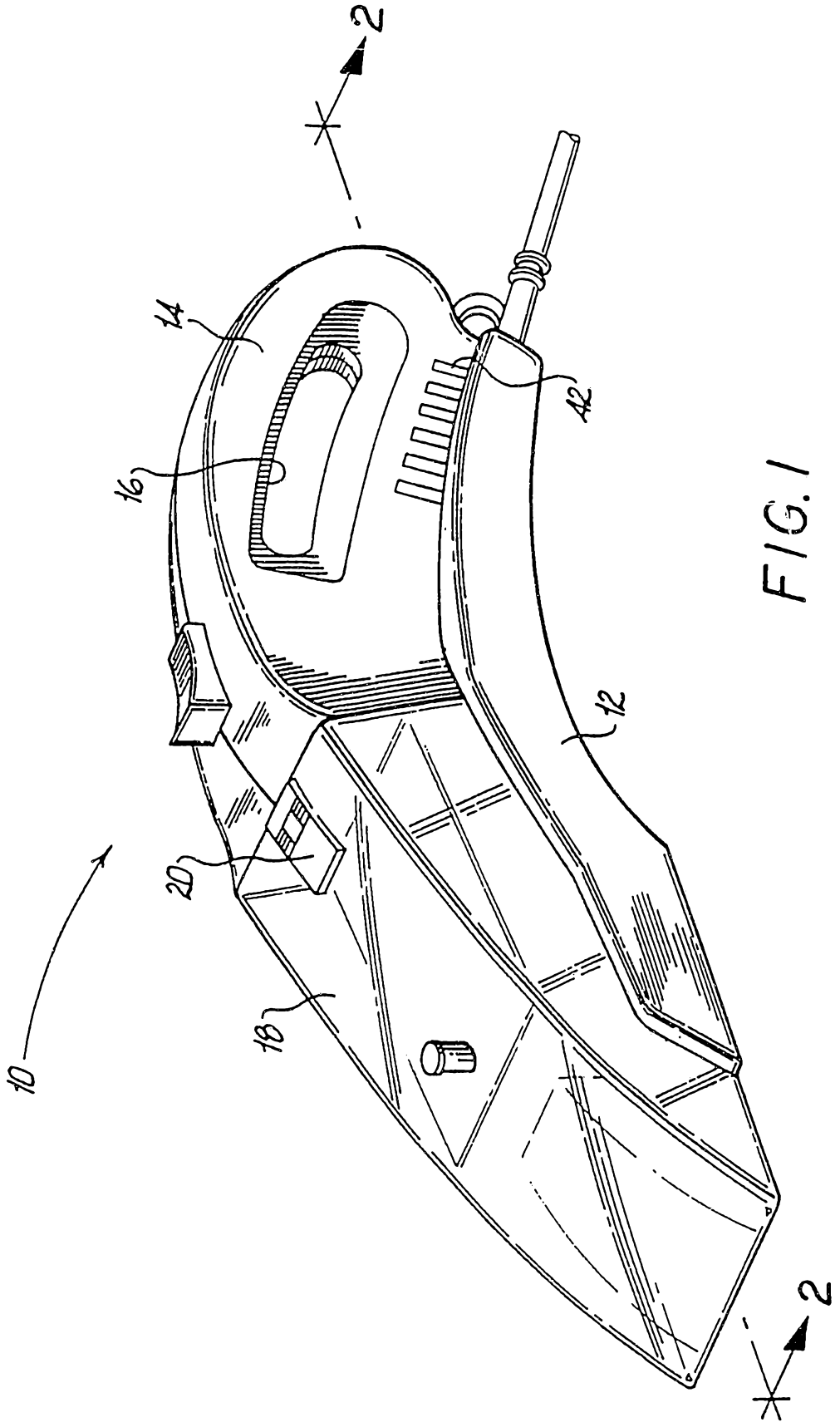


FIG. 1

FIG. 2

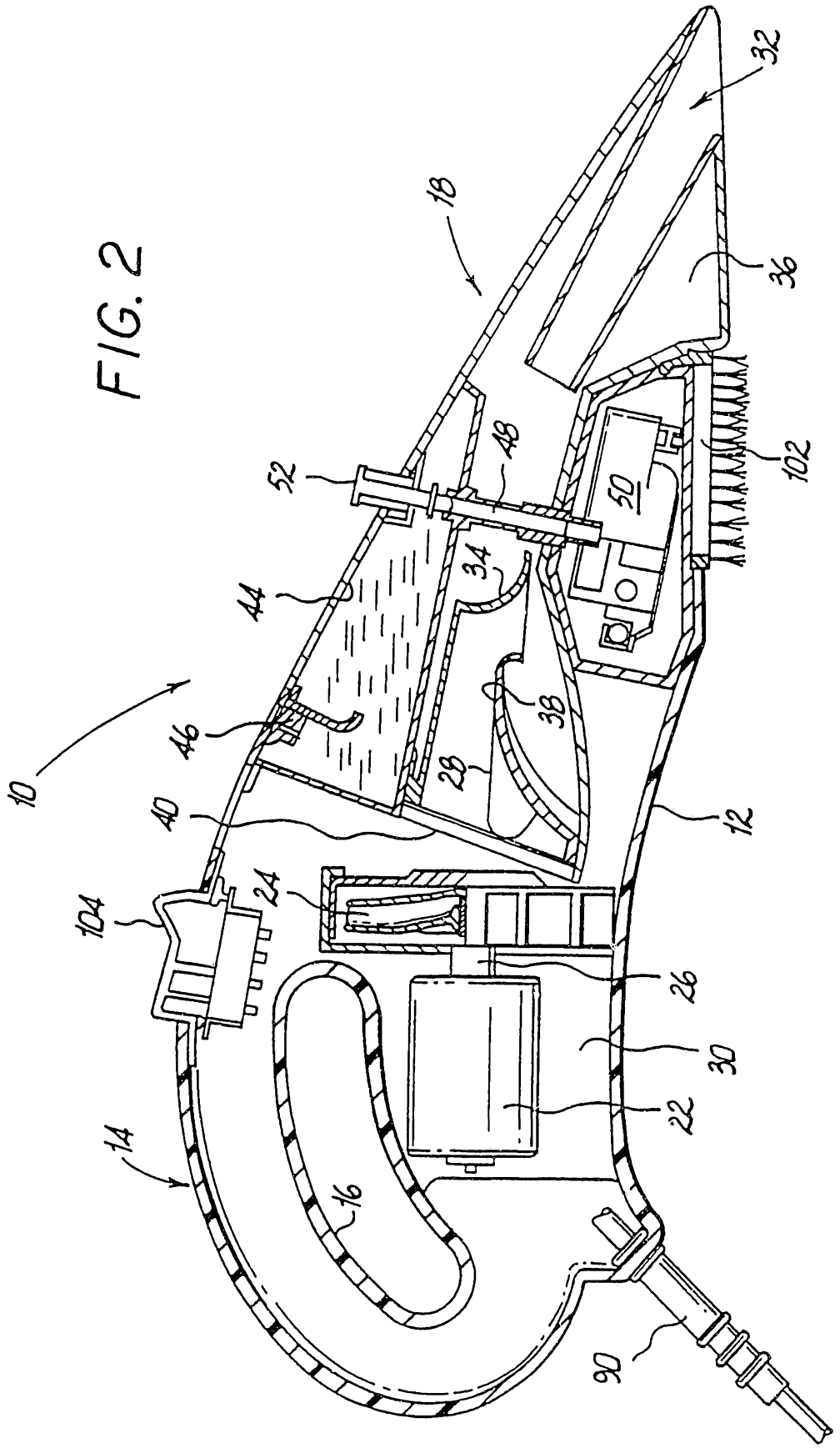

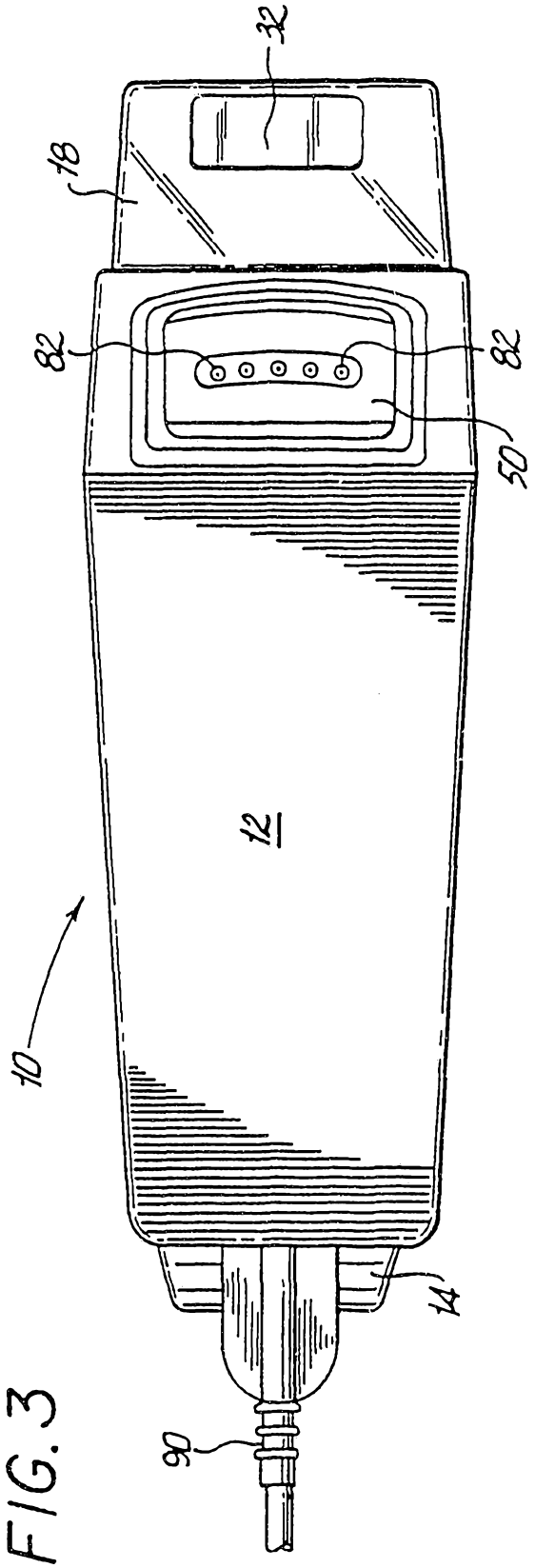


FIG. 3

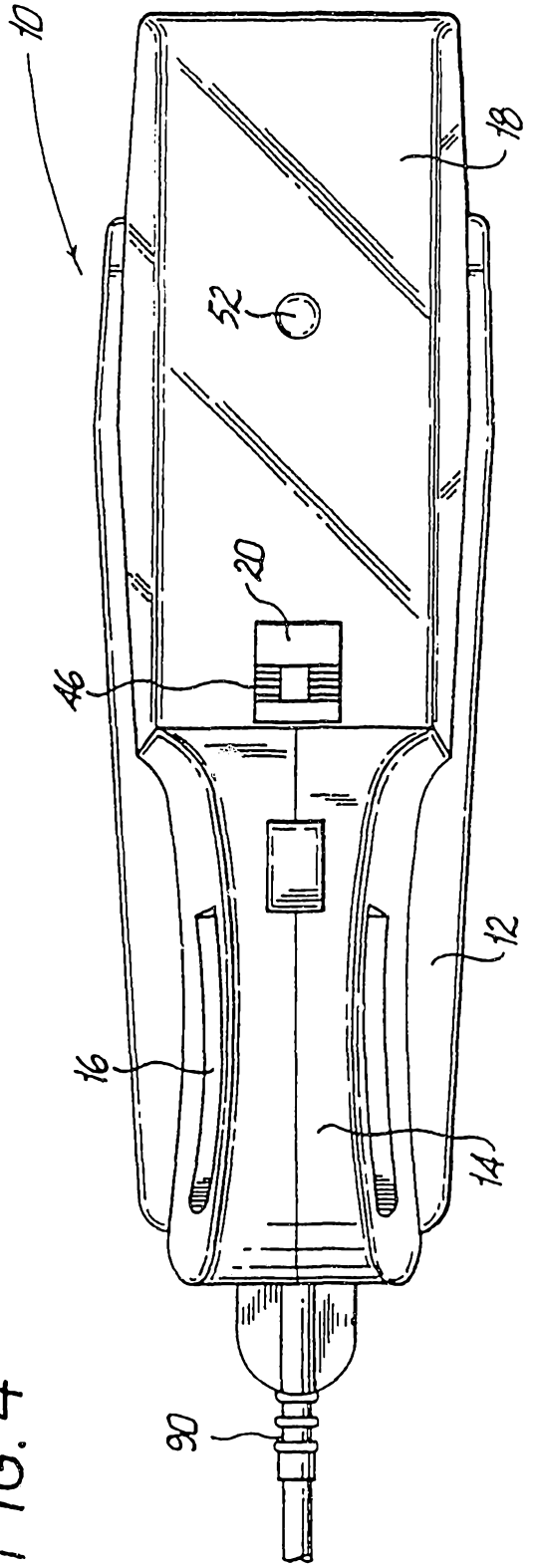


FIG. 4

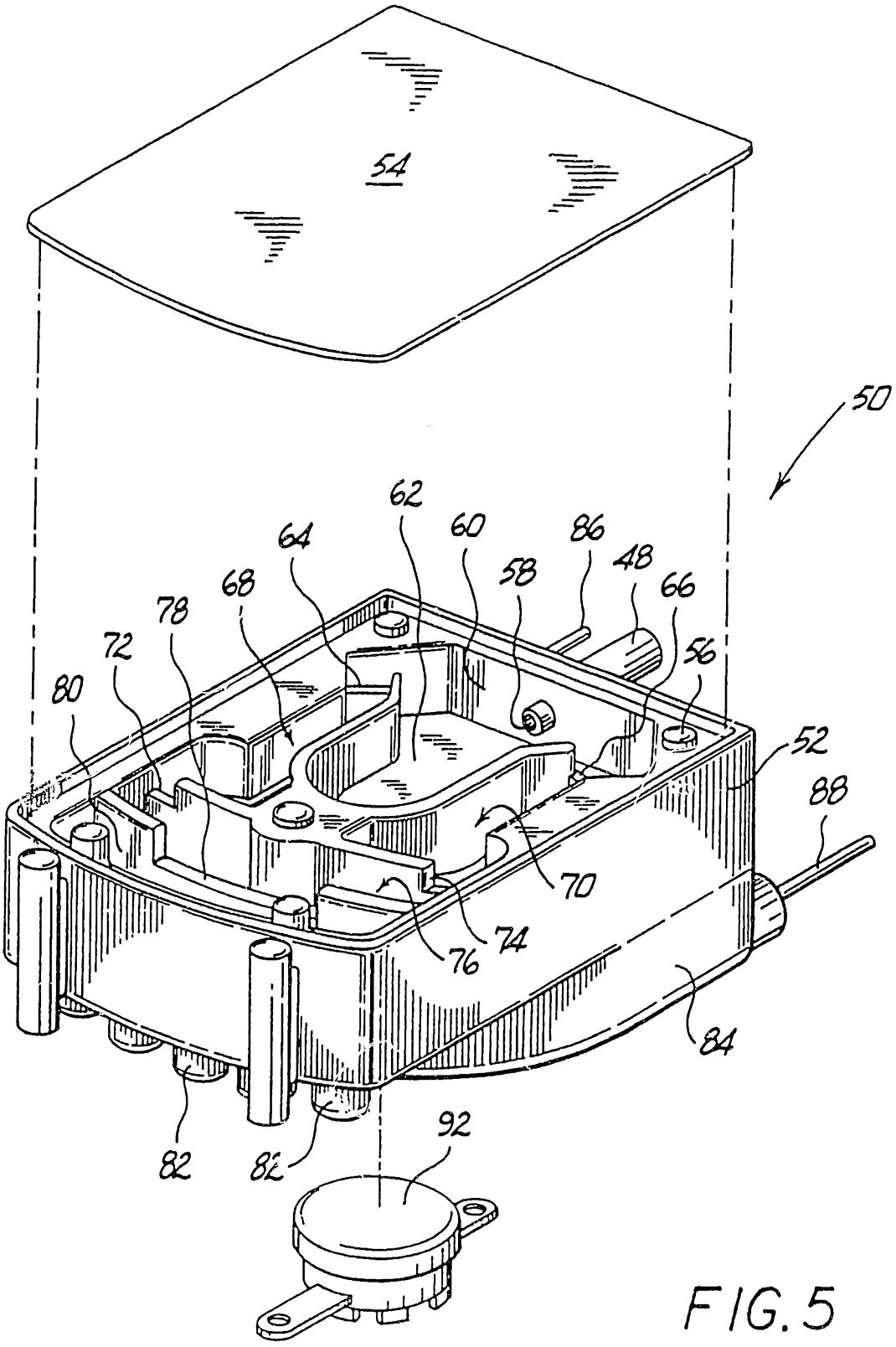


FIG. 5

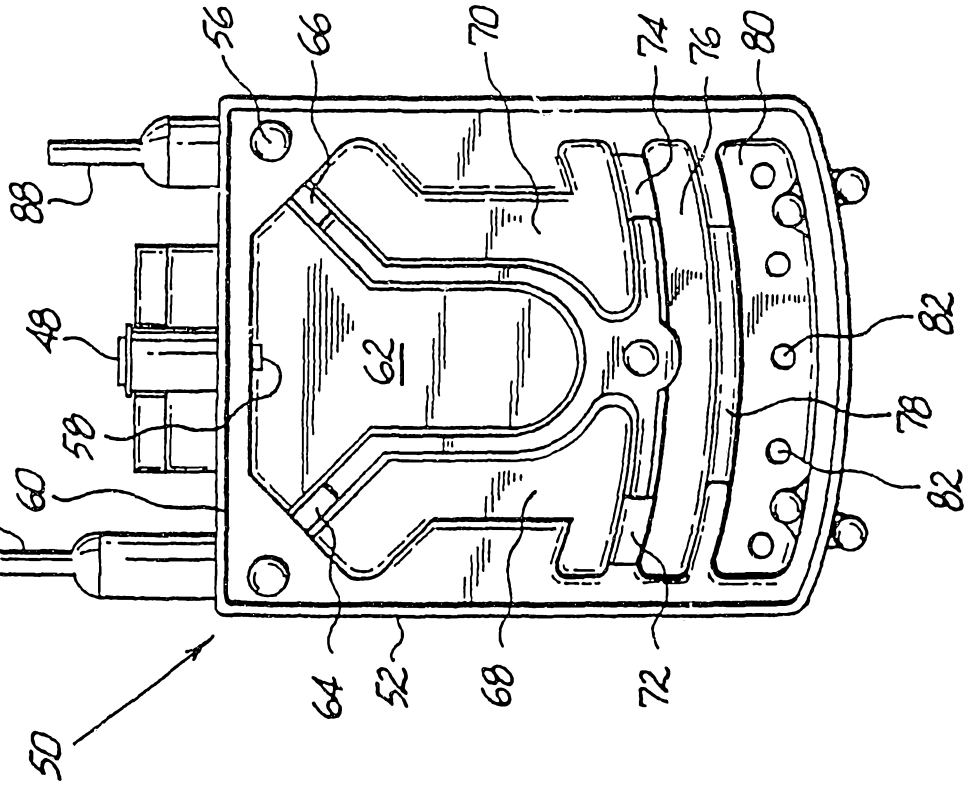
56
66
70
74
76
80
88
48
58
60
86
62
82
78
82
50
64
52
68
72

FIG.7

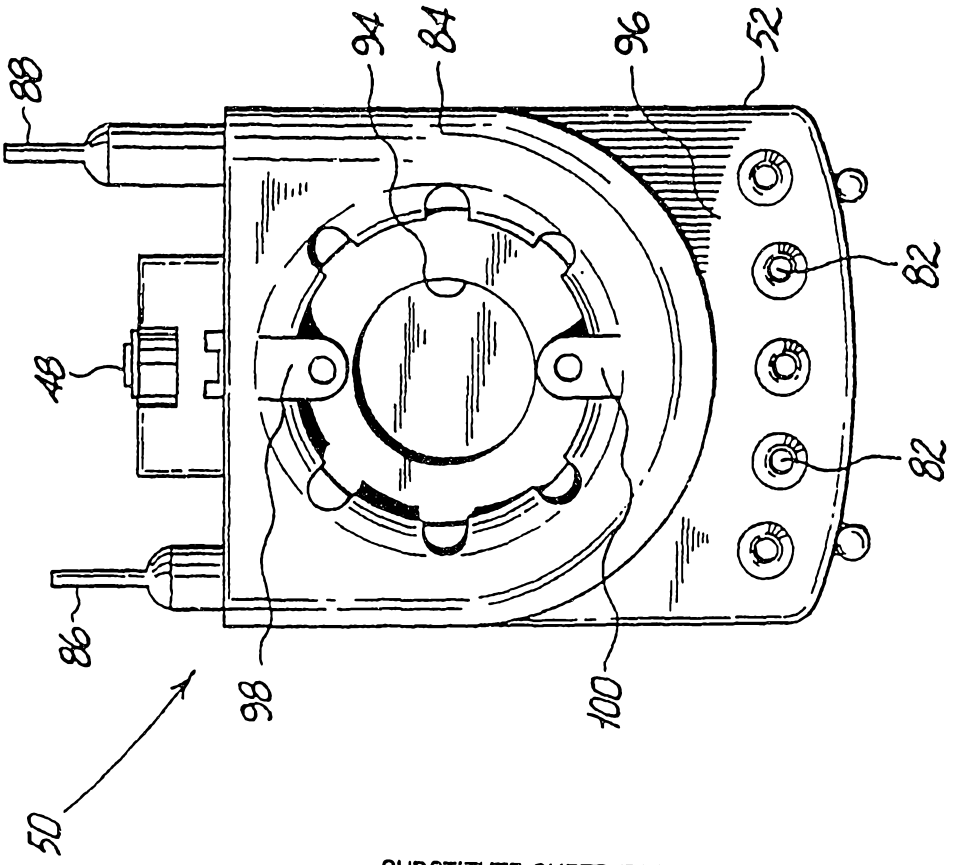
94
84
96
52
88
82
48
82
86
98
100
50

FIG.6

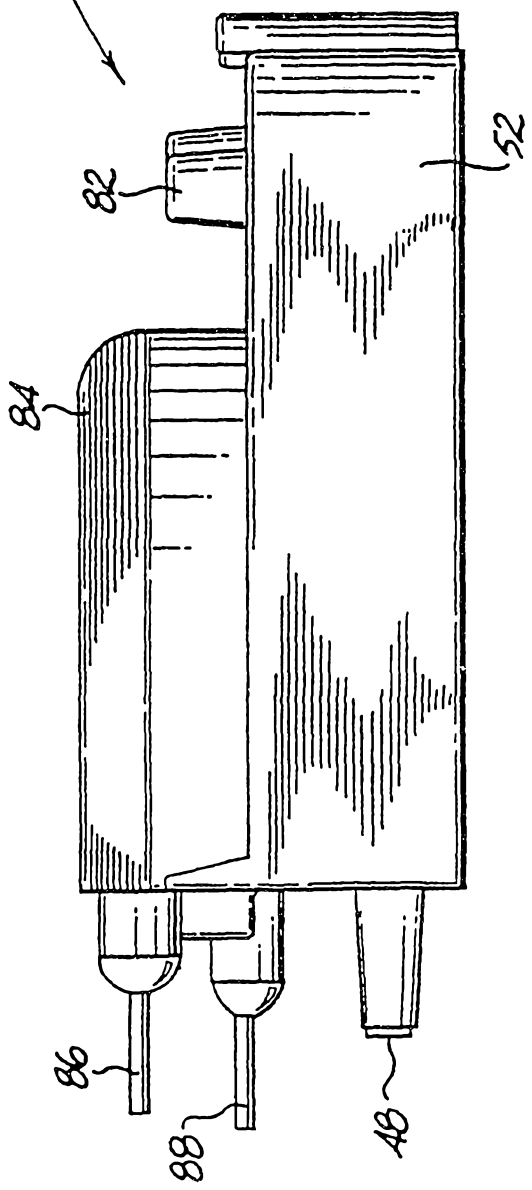


FIG. 8

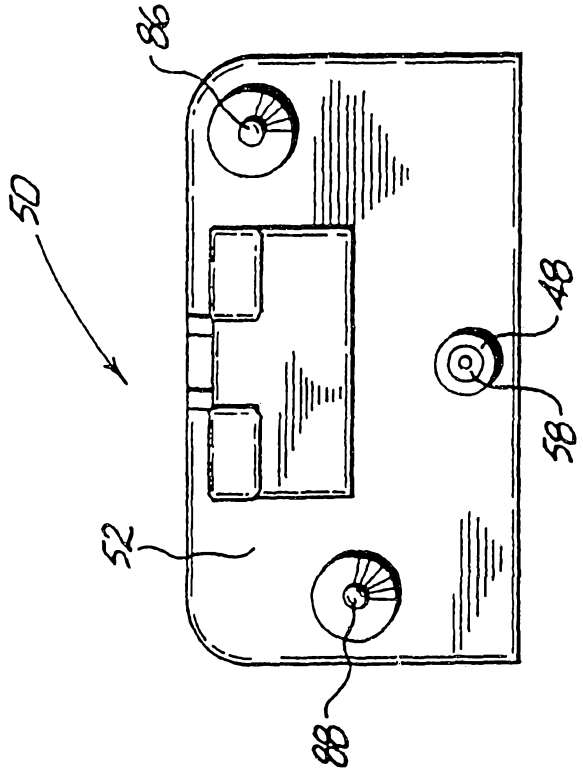


FIG. 9

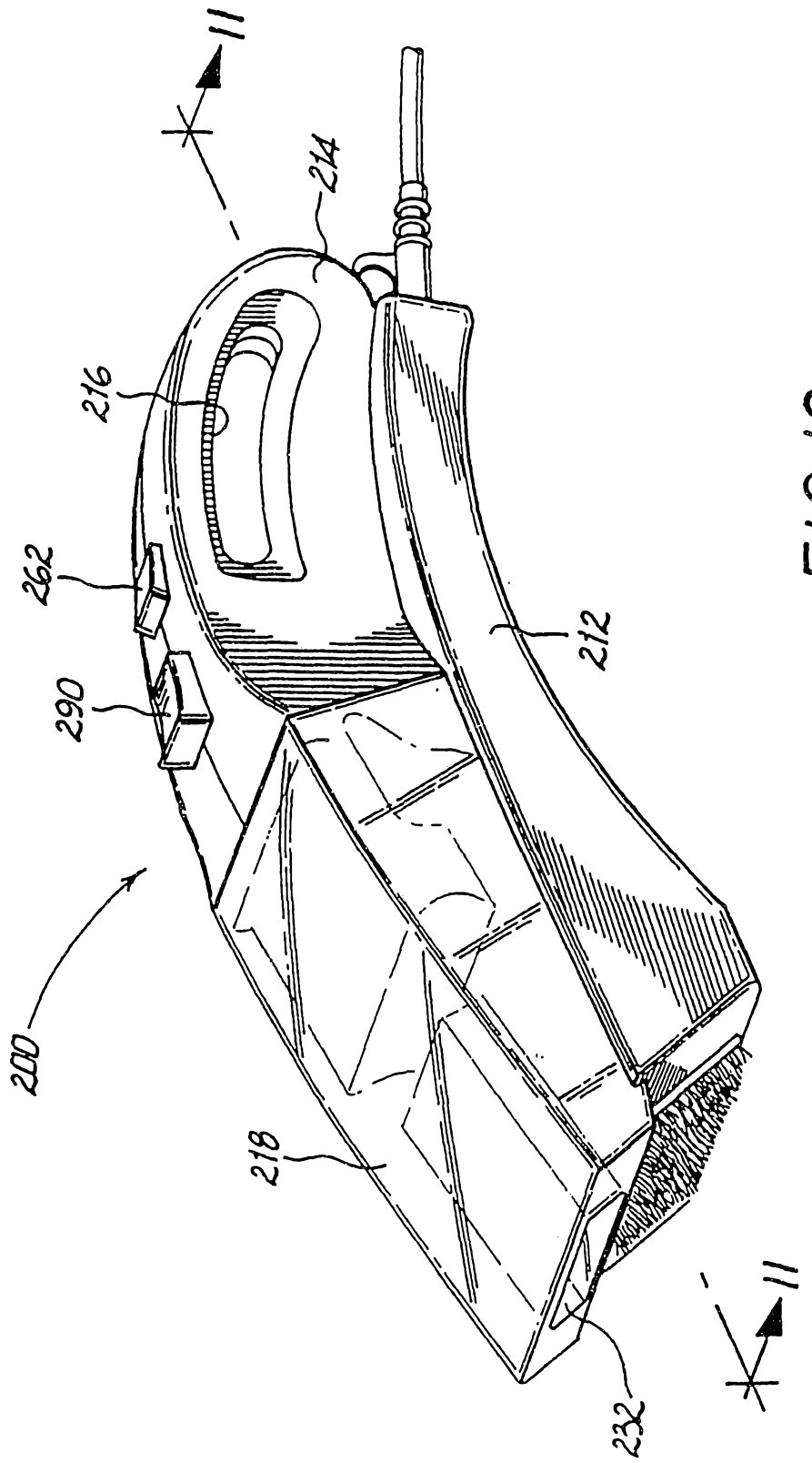


FIG. 10

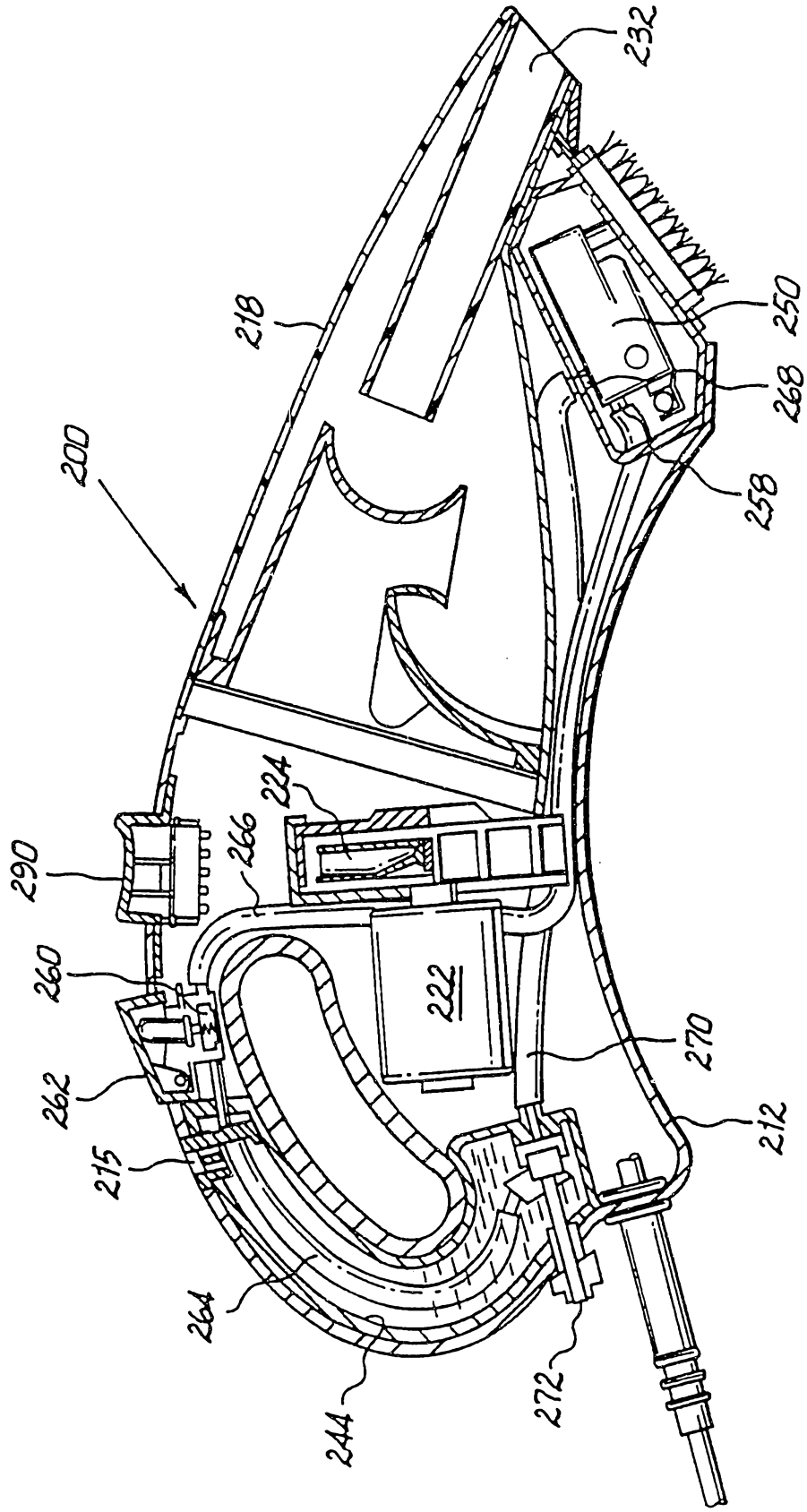
232
218
250
268
200
258
224
290
266
260
222
270
262
212
215
264
244
272

FIG. 11

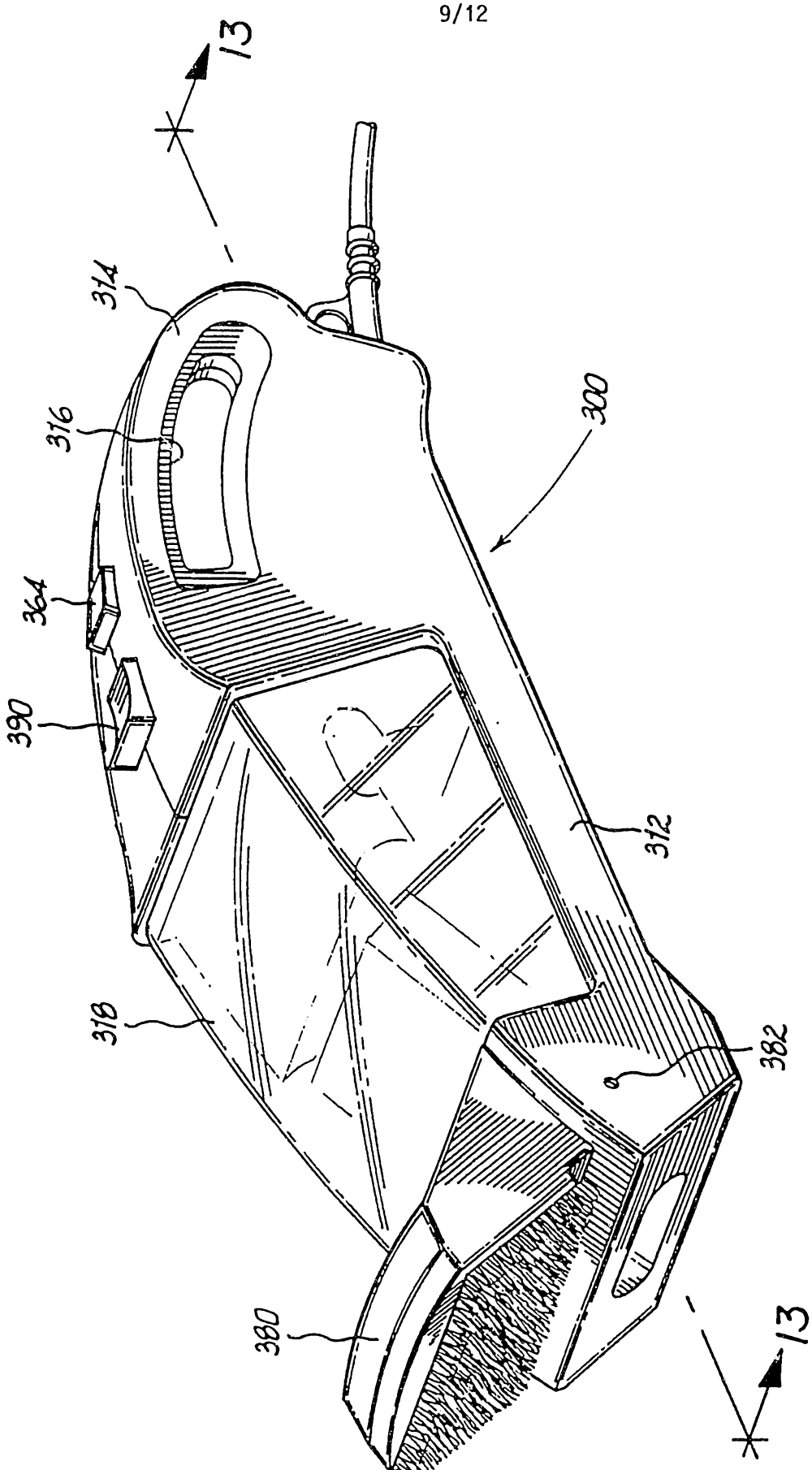


FIG. 12

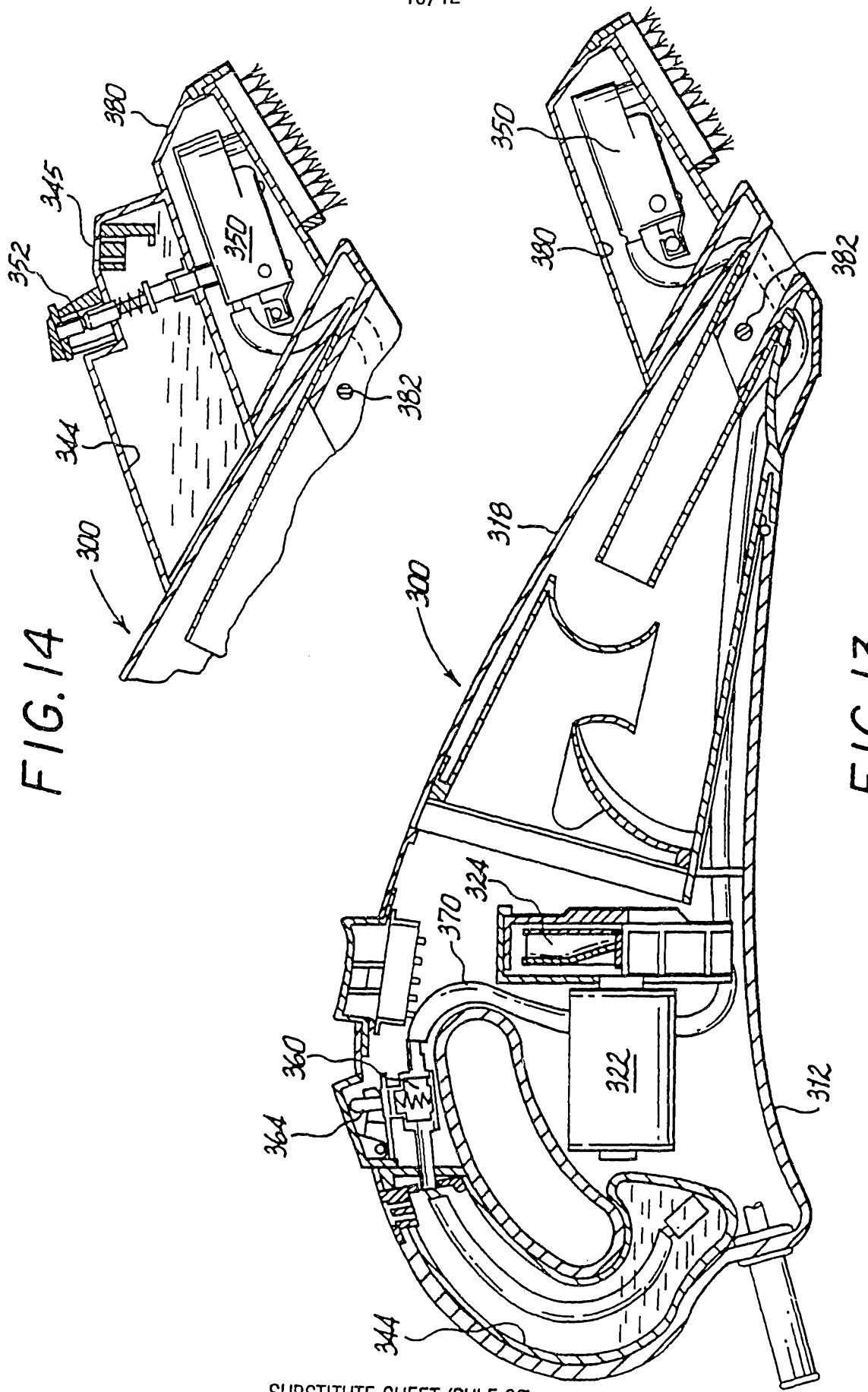
380
345
352
350
382
344
300
FIG. 14
350
380
382
318
300
324
370
322
360
364
312
344
FIG. 13

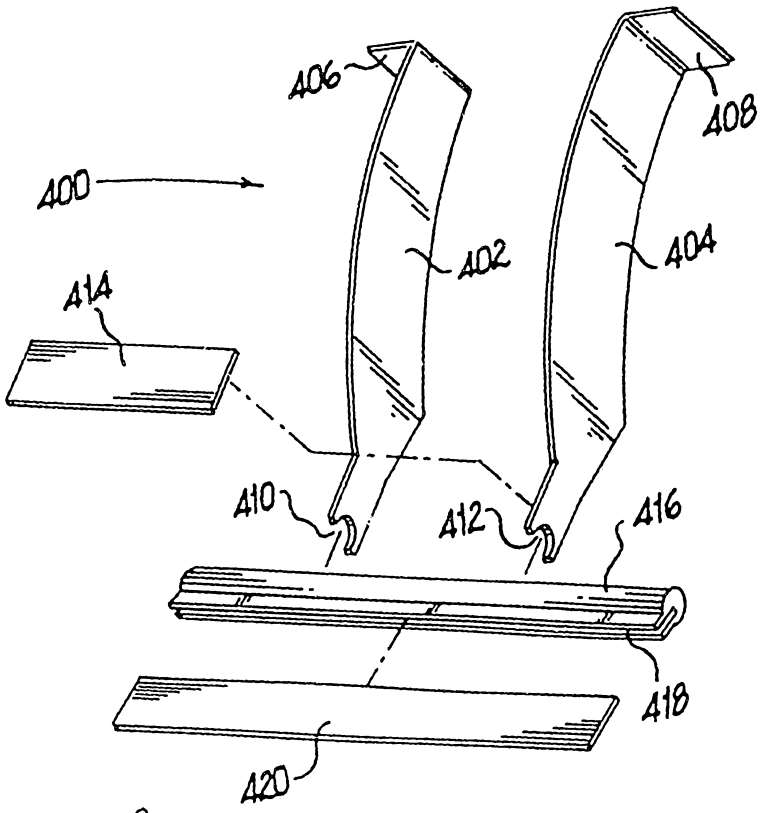


FIG.15

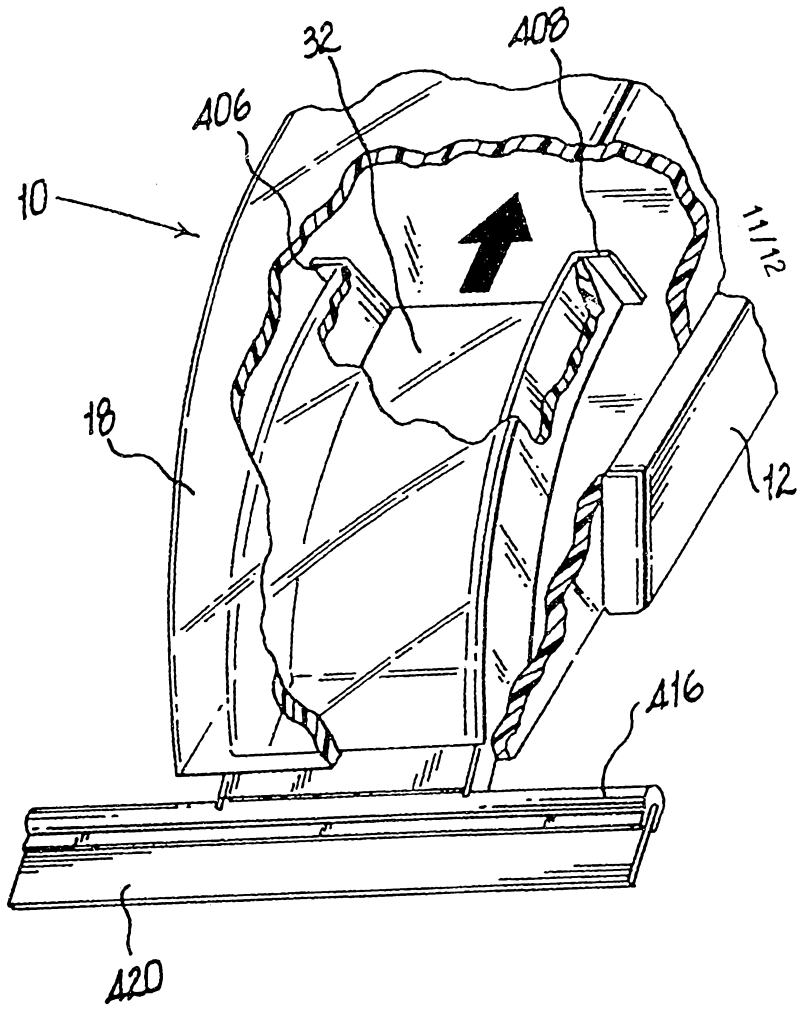


FIG.16

SUBSTITUTE SHEET (RULE 26)

PCT/GB94/00864

65738/94



FIG. 18

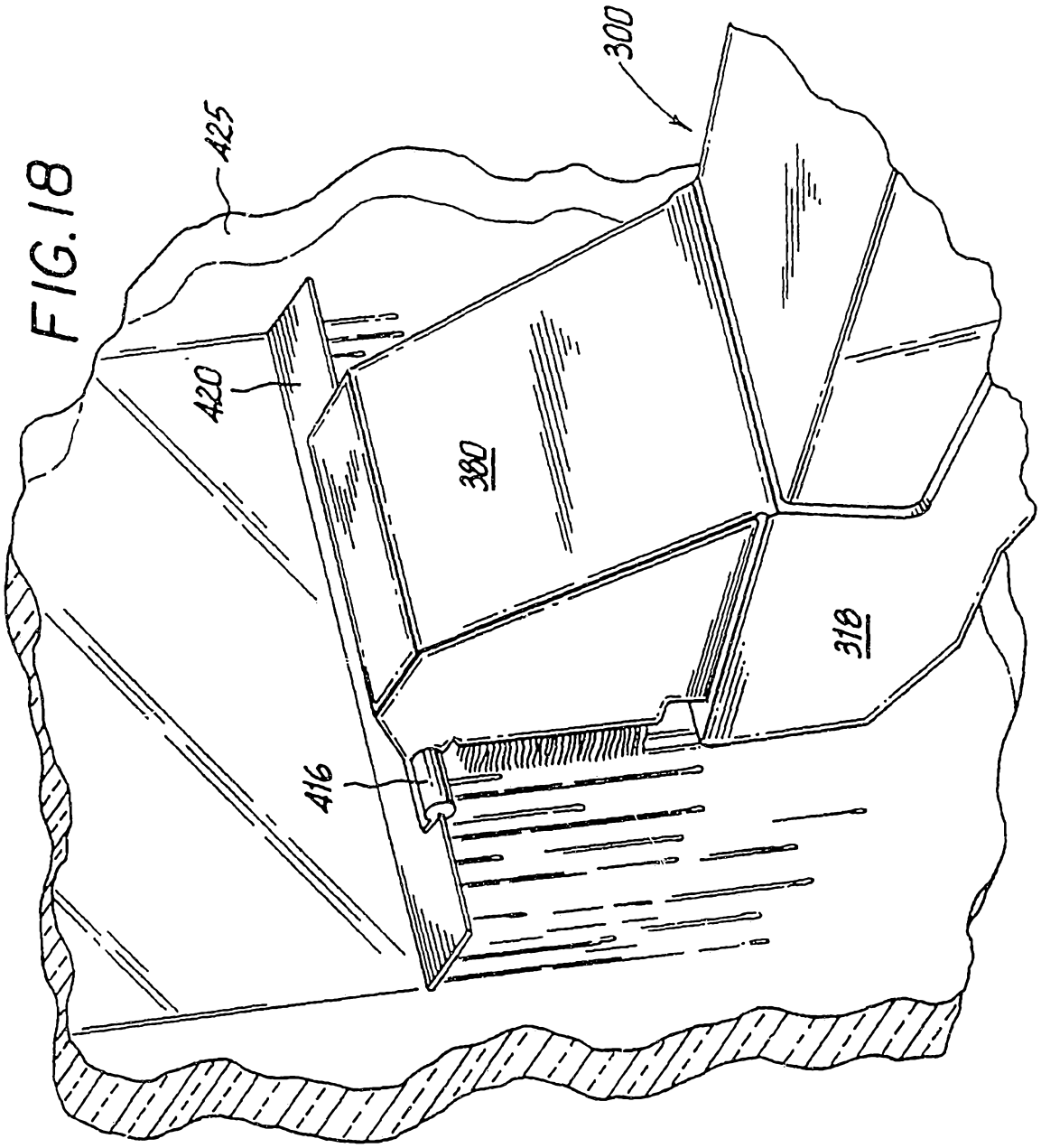


FIG. 17

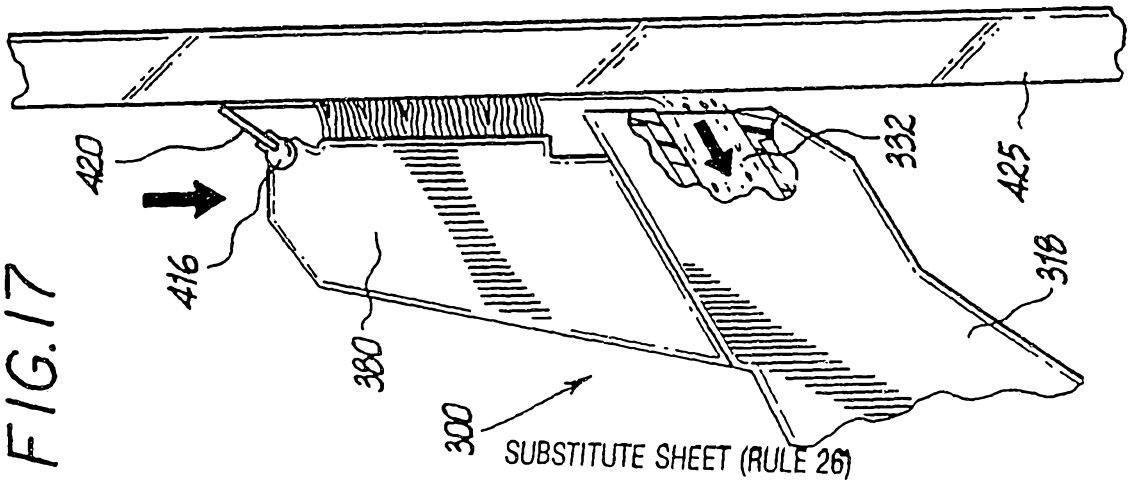

# INTERNATIONAL SEARCH REPORT

International application No.
PCT/GB 94/00864

A. CLASSIFICATION OF SUBJECT MATTER
IPC 5 A47L1/08 A47L5/24 A47L7/00

According to International Patent Classification (IPC) or to both national classification and IPC

B. FIELDS SEARCHED

Minimum documentation searched (classification system followed by classification symbols)
IPC 5 A47L

Documentation searched other than minimum documentation to the extent that such documents are included in the fields searched

Electronic data base consulted during the international search (name of data base and, where practical, search terms used)

C. DOCUMENTS CONSIDERED TO BE RELEVANT

| Category * | Citation of document, with indication, where appropriate, of the relevant passages | Relevant to claim No. |
|---|---|---|
| X<br>Y | FR,A,2 665 650 (F. VERMOND) 14 February 1992<br>see the whole document | 1<br>2-6,9, 10,12,13 |
| P,Y | EP,A,0 586 762 (WING SHING OVERSEAS LTD) 16 March 1994<br>see abstract; figures 2,11,13,14 | 2-6,9, 10,12,13 |
| X | FR,A,2 236 467 (P.L. LECLERCQ) 16 January 1975<br>see claims | 1 |
| Y<br>A | FR,A,1 561 817 (E. MOEHRING) 28 March 1969<br>w | 1-6,9,10 12,13 |
| | -/-- | |

[X] Further documents are listed in the continuation of box C.

[X] Patent family members are listed in annex.

* Special categories of cited documents :

"A" document defining the general state of the art which is not considered to be of particular relevance

"E" earlier document but published on or after the international filing date

"L" document which may throw doubts on priority claim(s) or which is cited to establish the publication date of another citation or other special reason (as specified)

"O" document referring to an oral disclosure, use, exhibition or other means

"P" document published prior to the international filing date but later than the priority date claimed

"T" later document published after the international filing date or priority date and not in conflict with the application but cited to understand the principle or theory underlying the invention

"X" document of particular relevance; the claimed invention cannot be considered novel or cannot be considered to involve an inventive step when the document is taken alone

"Y" document of particular relevance; the claimed invention cannot be considered to involve an inventive step when the document is combined with one or more other such documents, such combination being obvious to a person skilled in the art.

"&" document member of the same patent family

1

| Date of the actual completion of the international search | Date of mailing of the international search report |
|---|---|
| 1 July 1994 | 05.08.94 |
| **Name and mailing address of the ISA**<br>European Patent Office, P.B. 5818 Patentlaan 2<br>NL - 2280 HV Rijswijk<br>Tel. (+31-70) 340-2040, Tx. 31 651 epo nl,<br>Fax (+31-70) 340-3016 | **Authorized officer**<br>Vanmol, M |

Form PCT/ISA/210 (second sheet) (July 1992)

# INTERNATIONAL SEARCH REPORT

International application No.
PCT/GB 94/00864

C.(Continuation) DOCUMENTS CONSIDERED TO BE RELEVANT

| Category * | Citation of document, with indication, where appropriate, of the relevant passages | Relevant to claim No. |
|---|---|---|
| Y | US,A,4 788 738 (C.L. MONSON) 6 December 1988<br>cited in the application<br>see the whole document | 1-6,9,10 |
| A | US,A,3 396 417 (R.A.STARR) 13 August 1968<br>see column 1, line 54 - column 3, line 53; figures | 1,2,9 |
| A | EP,A,0 200 807 (ZAI,RE CHIN) 12 November 1986<br>see claims; figures | 1-5 |

Form PCT/ISA/210 (continuation of second sheet) (July 1992)

# INTERNATIONAL SEARCH REPORT

Information on patent family members

International application No.
PCT/GB 94/00864

| Patent document cited in search report | Publication date | Patent family member(s) | | Publication date |
|---|---|---|---|---|
| FR-A-2665650 | 14-02-92 | NONE | | |
| EP-A-0586762 | 16-03-94 | NONE | | |
| FR-A-2236467 | 16-01-75 | NONE | | |
| FR-A-1561817 | 28-03-69 | NONE | | |
| US-A-4788738 | 06-12-88 | US-A- | 4930178 | 05-06-90 |
| US-A-3396417 | | NONE | | |
| EP-A-0200807 | 12-11-86 | GB-A,B | 2160228 | 18-12-85 |
| | | US-A- | 4583260 | 22-04-86 |