Jan. 12, 1965 AKIRA YOKOYAMA 3,165,022

TONE PRODUCTION SYSTEM IN ELECTRONIC MUSICAL INSTRUMENT

Filed April 18, 1963 3 Sheets-Sheet 1

FIG. 1.

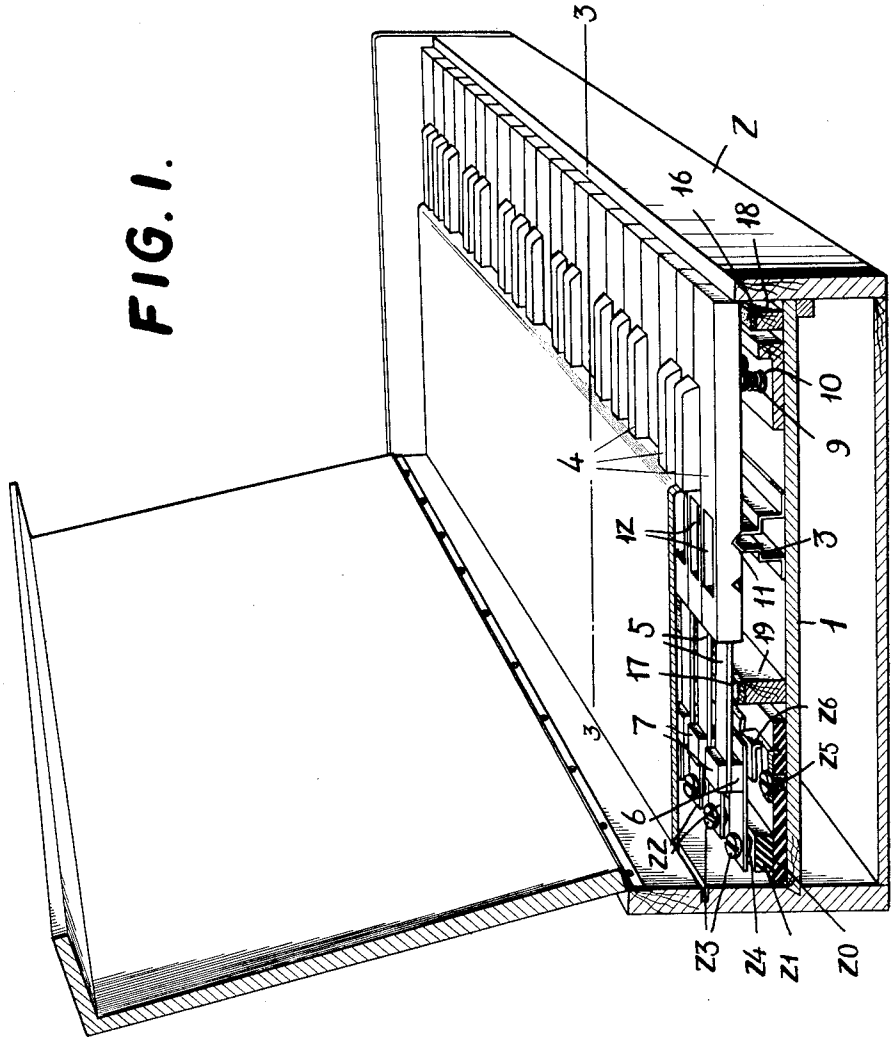

Inventor:
AKIRA YOKOYAMA
By: McGlew and Toren
Attorneys

Jan. 12, 1965 AKIRA YOKOYAMA 3,165,022

TONE PRODUCTION SYSTEM IN ELECTRONIC MUSICAL INSTRUMENT

Filed April 18, 1963 3 Sheets-Sheet 2

FIG. 2.

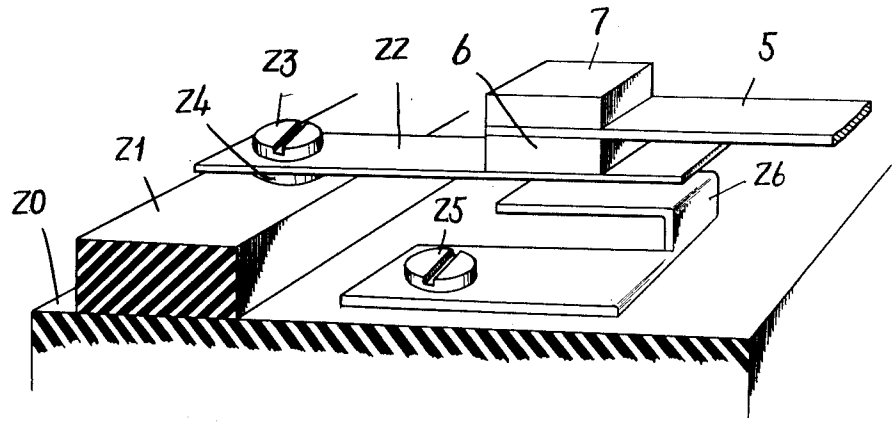

FIG. 3.

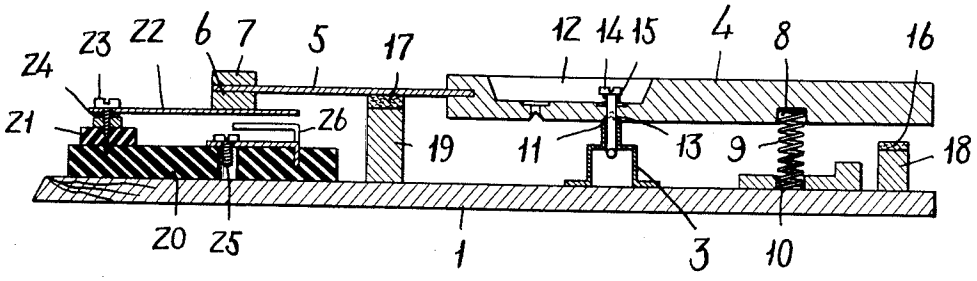

Inventor:
AKIRA YOKOYAMA
By: McGlew and Toren
Attorneys

Jan. 12, 1965 AKIRA YOKOYAMA 3,165,022

TONE PRODUCTION SYSTEM IN ELECTRONIC MUSICAL INSTRUMENT

Filed April 18, 1963 3 Sheets-Sheet 3

FIG. 4.

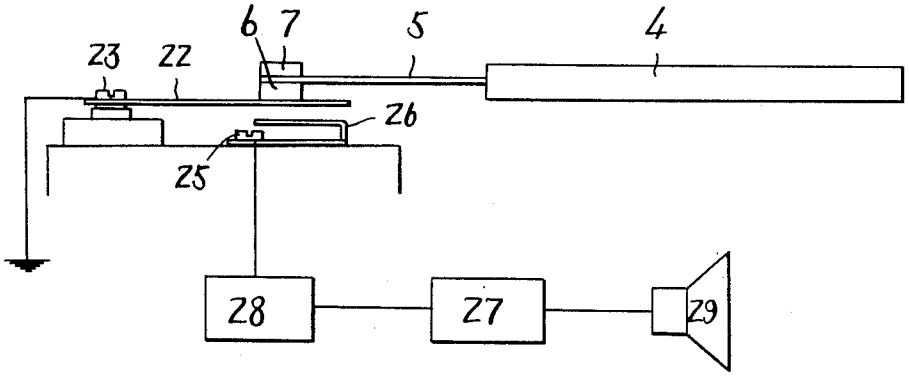

Inventor:
AKIRA YOKOYAMA
By: McGlew and Toren.
Attorneys

United States Patent Office 3,165,022 Patented Jan. 12, 1965

3,165,022

TONE PRODUCTION SYSTEM IN ELECTRONIC MUSICAL INSTRUMENT

Akira Yokoyama, % Yaou Electric Co., Ltd., 1116 Suenaga, Kawasaki-shi, Kanagawa-ken, Japan

Filed Apr. 18, 1963, Ser. No. 274,017
4 Claims. (Cl. 84—405)

This invention relates to a tone production apparatus such as an electronic organ or similar electronic musical instrument. More particularly, the invention is concerned with the sound production system in such musical instruments wherein a permanent magnet is adapted to come in and out of contact with a tone producer of ferromagnetic material thereby controlling the production of sound.

Generally, as the fundamental requirements for keyboard instruments, there may be considered as instantaneous impulsive response of a vibrating string or reed to hammer action of a keyboard or manual; the absence of "rebound" or objectionable echo, and a quick termination of vibration of the string or reed upon release of the key.

With conventional keyboard instruments, it has hitherto been difficult to meet these requirements without involving complex and expensive design considerations such as given to a grand piano. Moreover, with the conventional type keyboard instruments, it has been impossible to make the equipment compact and space-saving in consideration of the above technical requirements.

Whereas, it is an object of the present invention to provide a simplified, compact and low-cost keyboard instrument capable of impulsive tone production which will substantially fulfill the afore-mentioned fundamental requirements. To accomplish the object, the invention contemplates application of its principles to a relatively low-cost electronic organ or similar electronic musical instrument.

The characteristic features of the invention lie primarily in the construction of such an electronic keyboard instrument in which the keyboard or manual is provided with a plurality of permanent magnets which, at the rest position of the keyboard, remain in contact with corresponding tone producing members or vibrating reeds of ferromagnetic material mounted on a base and which, when the key is depressed, separate from the tone producing members.

In a preferred mode of the invention, the permanent magnet just mentioned may be a rubber magnet.

With this construction, when the key is depressed, the tone producing member is released from the permanent magnet, followed by impulsive excitation into vibration and is so maintained until this vibration attenuates progressively with time. If the key is released while the tone producing member is still in vibration, the permanent magnet is attracted to the tone producing member thereby rapidly stopping the vibration. Attraction of the magnet to the tone producing member takes place of course as soon as the key is released after vibration is ceased.

In accordance with an embodiment of the invention, there may be provided an electrode in close vicinity to the tone producing member so that a capacitor is formed therebetween. As can be readily understood to those skilled in the art, this capacitor undergoes static variation according to vibration of the tone producing member. Therefore, by connecting the capacitor circuit to a suitable electrical device, it is possible to obtain a sound corresponding to a variation in static capacity of the circuit by way of a speaker. The electrode, as it is obvious, may be replaced by a coil or other suitable means.

For a more complete understanding of the nature and

scope of the invention, as concisely defined in the appended claims, reference may be made to the following detailed description of a specific embodiment taken in conjunction with the accompanying drawing in which:

FIG. 1 is a perspective view of a keyboard instrument embodying the invention with a portion cut away to show the internal structure.

FIG. 2 is a magnified perspective view of the essential portion of the structure in FIG. 1.

FIG. 3 is a cross-sectional view taken on the line 3—3 of FIG. 1.

FIG. 4 is a schematic diagram illustrating an application of the tone production system according to the invention.

Reference being now had to FIGS. 1 through 4, inclusive, a mounting base **1** is shown as extending longitudinally of and parallel with a case **2**. On the mounting base **1**, there is provided a fulcrum rail **3** extending at the center and lengthwise thereof to support a plurality of keys **4**. Each of the keys **4** is attached at its rear end with a magnet mounting plate **5**. This mounting plate may alternatively be a bar or rod. The magnet mounting plate **5** is provided at the other end with a permanent magnet **6** and with a balancing weight **7**, the former being attached to the bottom and the latter to the top of the plate, respectively.

Designated by the numeral **9** is a coil spring which is secured at one end in a recess **8** provided in the bottom part of the key **4** in front of the support rail **3** and at the other end in a similar recess **10** provided in the mounting base **1** at corresponding position. The key **4** is further provided at the bottom part with a groove **11** to engage the top of the support rail **3**, which is cone-shaped as viewed from the side, and at the top part with a recess **12**. The numeral **13** designates a small holes provided between the groove **11** and the upper recess **12**.

A pin **14** is adapted to secure the key **4** to the support rail **3** and is itself fixed at an end to the rail **3**. A coil spring **15** is adapted to facilitate the engagement of key **4** with rail **3** under tension.

On the mounting base **1**, there are provided stoppers **18** and **19** attached with felts **16** and **17**, respectively, the one being located in front and the other in rear of the support rail **3**. These stoppers are adapted to limit the range of motion of the key **4**.

On the mounitng base **1**, there is further provided an electrical insulating board **20** underneath the permanent magnet **6**. The insulator board **20** is mounted with a support member **21** of electrical insulating material. On top of this support member is provided a tone producing member, i.e. vibration reed **22** which is fastened thereto by means of a wooden screw **23** and a washer **24**.

The vibration reed **22** is normally held at its free end in contact with the permanent magnet **6** at the rest position of the keyboard.

Now, in operation of the tone production apparatus in accordance with the invention, as the key **4** is depressed against tension in the coil spring **9**, the permanent magnet **6** moves upward to a point where the tension of the vibration reed **22** overcomes the attraction of the magnet **6**, with the result that the magnet and the reed are forced apart. This is when the reed **22** begins self-vibration to produce a sound. As the key **4** is released, the permanent magnet **6** is brought back to its original position by means of the coil spring **9** and the balancing weight **7**. The reed vibration can be stopped immediately after release of the key because of the attraction of the magnet to the reed.

As shown in the drawings, the insulator board **20** is further provided thereon with a fixed electrode **26** having a lead connecting terminal **25**. The vibration reed **22** coacts with the fixed electrode **26** to form a capacitor. Quite obviously, this capacitor is subjected to static varia-

tion according to the amplitude of the reed vibration. The capacitor circuit, therefore, may be connected to an oscillator 28 coupled with an amplifier 27 to which a speaker 29 is connected. In this manner, it is possible to obtain a tone color corresponding to the vibration of the reed 22 through the speaker 29.

Obviously, the vibration reed 22 varies in size with the pitch of sound desired.

It will be understood from the foregoing description of the invention that the sound production system according to the invention substantially achieves the important prerequisites of a keyboard musical instrument—an instantaneous impulse to the vibration reed with a minimum force of depression of the key, no "rebound" or objectionable echo, and a quick stop to the reed vibration upon release of the key. Furthermore, in accordance with the invention, it is possible to render the instrument as a whole substantially compact and light weight thereby permitting of its location in minimum space.

Since certain changes may be made in the above described construction, and different embodiments may be made of the invention without departing from the spirit or scope thereof, it is intended that all the matter contained in the above description and shown in the accompanying drawings shall be considered as illustrative and not in a limiting sense. And, it is to be understood that without further analysis of the principles of the invention herein, those skilled in the art may easily apply the principles set forth in the following claims to a variety of electronic keyboard instruments.

What is claimed is:

1. In an electronic musical instrument, a tone production system comprising, in combination, a plurality of vibratory reeds of paramagnetic material, a corresponding number of keys constituting a keyboard and each associated with a respective reed; means fixedly mounting each reed at one end thereof for free vibration of the reed relative to such one end; means mounting said keys for movement between a rest position and a depressed position; each key having one end overlapping the associated reed; and a plurality of permanent magnets each directly secured to said one end of the respective reed key; each magnet, in the rest position of its associated key, firmly engaging a vibratory portion of the associated reed to clamp the latter against vibration; each magnet, upon depression of its associated key, initially deflecting the associated reed about said fixed one end thereof and then releasing the associated reed for free vibration about said fixed one end; each magnet, upon release of its associated key, re-engaging the vibratory portion of the associated reed to terminate the free vibration of the latter.

2. A tone production system according to claim 1, in which said permanent magnets are rubber magnets.

3. In an electronic musical instrument, a tone production system as claimed in claim 1, said means mounting said keys engaging said keys intermediate their ends; and means biasing each key to the rest position; said one end of each key, in the rest position of the key, extending in laterally spaced, substantially parallel longitudinal alignment to the associated reed.

4. In an electronic musical instrument, a tone production system as claimed in claim 1, in which said one end of each key comprises a relatively elongated strip of material extending above the associated reed; the respective permanent magnet being secured to the free end of said strip of material on the undersurface of the latter; and a weight secured to the free end of said strip of material on the upper surface thereof.

References Cited by the Examiner

UNITED STATES PATENTS

2,780,126	2/57	Modeer	84—1.15
3,026,587	3/62	Spencer	317—201
3,042,205	7/62	Merwin	317—201
3,077,137	2/63	Miessner	84—1.15 X

LEO SMILOW, *Primary Examiner.*