No. 606,871. Patented July 5, 1898.

F. H. MANNING & J. P. BOUCHET.

CAR CUSPIDOR.

(No Model.) (Application filed Dec. 18, 1897.) 2 Sheets—Sheet 1.

Fig. 1.

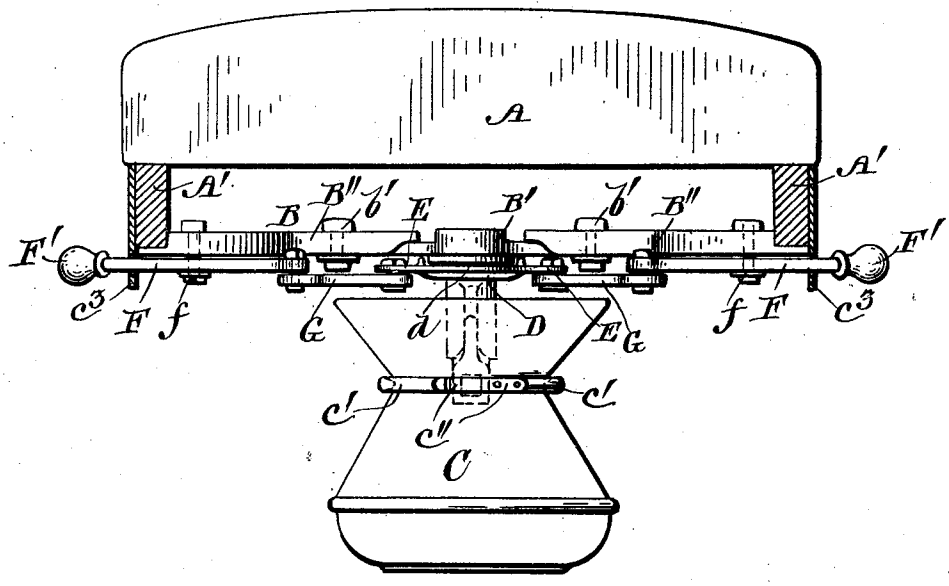

Fig. 2.

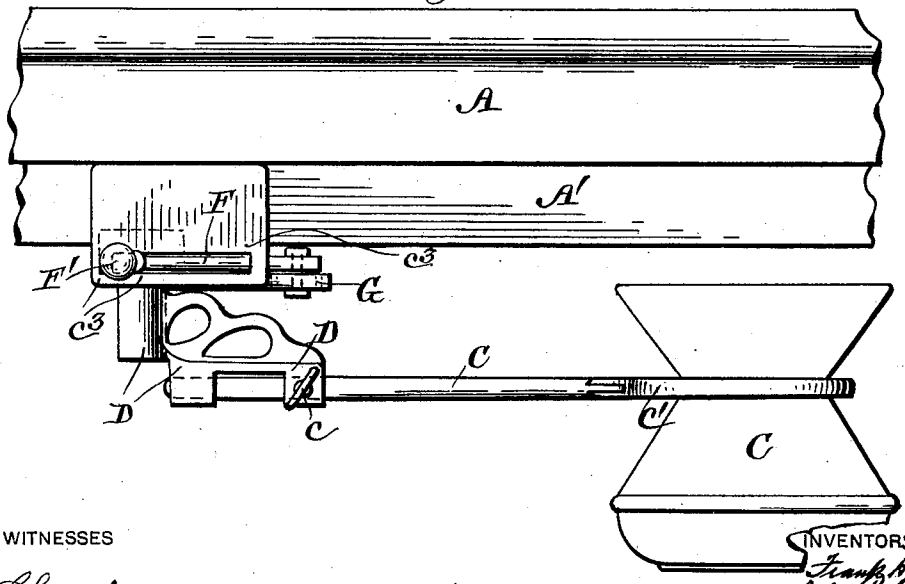

WITNESSES

Severance
Reed Clift

INVENTORS

Frank H. Manning
John P. Bouchet
by their Atty
Mason Fenwick & Lawrence

THE NORRIS PETERS CO., PHOTO-LITHO., WASHINGTON, D. C.

No. 606,871. Patented July 5, 1898.

F. H. MANNING & J. P. BOUCHET.

CAR CUSPIDOR.

(No Model.) (Application filed Dec. 18, 1897.)

2 Sheets—Sheet 2.

Fig. 3.

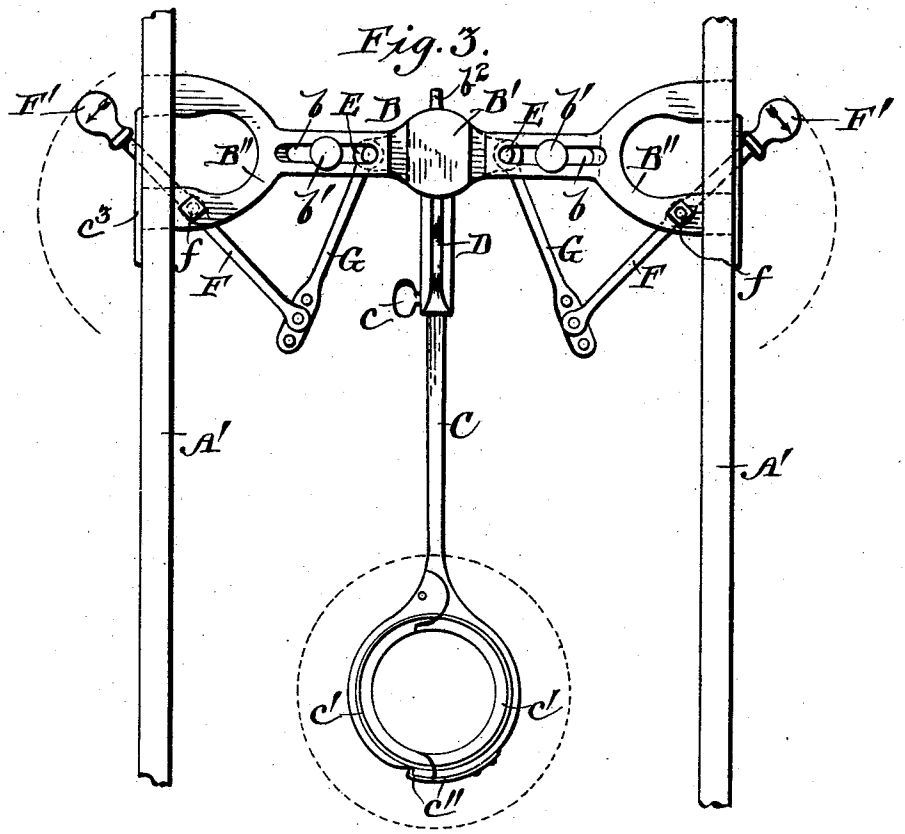

Fig. 4.

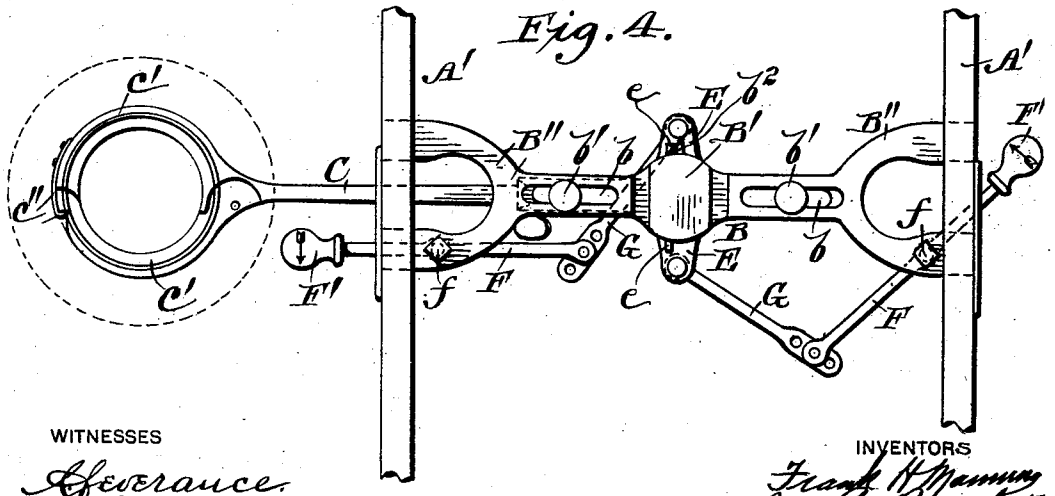

WITNESSES

Geo. Reed Cliff.

INVENTORS

Frank H. Manning
John P. Bouchet
by their Attys
Mason Fenwick & Lawrence

THE NORRIS PETERS CO., PHOTO-LITHO., WASHINGTON, D. C.

UNITED STATES PATENT OFFICE.

FRANK H. MANNING AND JOHN P. BOUCHET, OF OSHKOSH, WISCONSIN.

CAR-CUSPIDOR.

SPECIFICATION forming part of Letters Patent No. 606,871, dated July 5, 1898.

Application filed December 18, 1897. Serial No. 662,458. (No model.)

To all whom it may concern:

Be it known that we, FRANK H. MANNING and JOHN P. BOUCHET, citizens of the United States, residing at Oshkosh, in the county of Winnebago and State of Wisconsin, have invented certain new and useful Improvements in Car-Cuspidors; and we do declare the following to be a full, clear, and exact description of the invention, such as will enable others skilled in the art to which it appertains to make and use the same, reference being had to the accompanying drawings, and to the letters of reference marked thereon, which form a part of this specification.

Our invention relates to an improved device for holding and operating car-cuspidors suspended beneath the seat; and the objects of our invention are as follows, first, to provide a means of suspending the cuspidor beneath the seat, so that it is practically concealed from view; second, to provide a means for readily moving it out beyond the line of the seat for use and returning it to its former position beneath the seat; third, to conceal the mechanism beneath the seat away from and without interfering with the braces and heating-pipes, so that the invention may be adapted to all kinds of car-seats now in use, and, fourth, to operate the device conveniently by hand.

We are aware that car-cuspidors have heretofore been used; but they have been operated by foot-lever and have been impracticable in the ordinary construction of cars for the reason that the braces and heating-pipes would interfere with the operation of the foot-lever. In our invention the device is operated by a slight movement of a hand ball or button at the edge of the seat.

In the accompanying drawings, Figure 1 is an end view, and Fig. 2 a side view, of the car-seat with our invention attached beneath. Fig. 3 is a top plan view, the seat being removed; and Fig. 4 the same, showing the outward position of the cuspidor.

Similar letters refer to similar parts in each view.

A represents the car-seat, and A′ the car-seat frame, to the under side of which our invention is attached by means of screws *a a*, &c., or other means of rigid attachment.

B represents the supporting frame or body of our invention, to which the other parts are attached. This frame may be composed of three parts, as shown in Fig. 3—a central portion B′ and two side parts B″ B″, sliding thereon and provided with grooves *b b* and set-screws *b′ b′* to afford lateral adjustment for the accommodation of our invention to the different sizes and widths of car-seats.

D is a central sleeve portion pivoted to the frame at *d* and provided with arms E E, extending at right angles.

C is a rod supporting the cuspidor C′ and sliding in the sleeve D, being secured and adjusted at the proper length by the thumb-screw *c*.

F F are levers upon each side, pivoted to the frame at *f f* and provided with small hand-balls F′ F′, extending just beyond the edge of the seat, having arrows or some representation to indicate the direction to be moved to bring the cuspidor from beneath the seat for use.

G G are links pivoted to the opposite ends of the levers F F and to the arms E E.

It will be observed that in our invention it will only be necessary to use one cuspidor for each car-seat and that the same may operate from either side by moving the hand-ball F′ a very short distance in the direction indicated by the arrow. The cuspidor is revolved, by means of the mechanism heretofore described, to the position shown in Fig. 4, permitting its use beyond the edge of the car-seat, and then by movement of the hand-ball in the opposite direction, reversing the mechanism, the cuspidor is returned to its former position beneath the seat, concealed from view. The movement of the hand-arm of the lever F upon either side revolves the arm E, linked thereto, in a one-fourth circle, carrying with it the sleeve D, the rod C, and the cuspidor C′. The outer end of the rod C is preferably provided with two jaws *c′ c′* to encircle the cuspidor, so that it may be readily removed for cleansing, and the jaws *c′ c′* are hinged to the rod C and secured by any form of a latch *c″* at the outer ends.

Our invention requires but little space beneath the seat-frame and in its adjustment and operation does not interfere with any heating-pipes or cross braces or rods that are used in different forms of car-seats.

It is only necessary to move the hand-ball a short distance in order to revolve the cuspidor laterally the necessary one-quarter circle, and stops are provided each side of the hand-ball to prevent further revolution. Our invention affords a simple and efficient means of suspending and operating a car-cuspidor and is adapted to all forms and sizes of car-seats.

In order to cause the cuspidor to stop at the proper place when it is swung outwardly, we also contemplate using a lug or projection, as b^2, formed upon the central portion B', adapted to be engaged by projections or lugs, as *e e*, formed upon the arms E. These lugs will assure the stopping of the cuspidor at the right place, but will not allow it to swing beyond a point from which it can be returned by means of the levers F.

Having now described our invention, what we claim as new, and desire to secure by Letters Patent, is—

1. In a cuspidor-support, the combination with a pivoted arm for holding the cuspidor, of a frame for supporting the same comprising a central portion and side attaching portion, the said side attaching portions being adjustably secured to the central portion whereby the frame may be attached to seats, tables or similar devices as may be desired, substantially as described.

2. In a cuspidor-support, the combination of a frame comprising a central portion, side portions adjustably secured to said central portion and adapted to be attached to any suitable support, an arm pivotally mounted upon the said central portion and levers connected thereto whereby the same may be swung out from beneath the support, substantially as described.

3. In a support for a cuspidor, the combination with a suitable frame, of an arm pivotally mounted thereon, levers pivotally mounted on the said frame and extending beyond the frame, links connecting the said levers with the said arm whereby the cuspidor may be swung upon its pivotal point, substantially as described.

4. In a support for cuspidors, the combination with a frame for attaching it to a seat or other supporting means, of a sleeve portion pivotally mounted on said frame, an arm adjustably secured in the said sleeve, lever extensions or arms mounted upon the said sleeve portion, links connected therewith and levers connected with the said links and projecting beneath the seat or other support whereby the cuspidor may be brought from beneath the same and returned to its place, substantially as described.

5. In a support for cuspidors, the combination with a suitable frame adapted to be attached to a seat or other similar support, of an arm for carrying a cuspidor pivotally mounted upon the said frame, lever projections secured to said arm, links pivotally attached thereto, levers pivotally mounted on the said frame and adjustably engaging the said links, the said levers being adapted to rotate the arm carrying the cuspidor upon its pivotal point, substantially as described.

6. In a support for cuspidors, the combination with a suitable frame, of a pivoted arm mounted thereon for carrying a cuspidor, links connected to said arm and levers connected to said links, the said levers extending beyond the support of the cuspidor-frame and stops for engaging the said levers to limit their movement, substantially as described.

In testimony whereof we affix our signatures in presence of two witnesses.

FRANK H. MANNING.
JOHN P. BOUCHET.

Witnesses:
F. J. McKENNEY,
CHAS. J. SCHMITT.